grass valley

INDIGO AV MIXER

Installation & Planning Guide

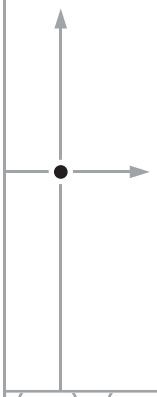

Revision 1
January 2007

THOMSON
images & beyond

Contacting Grass Valley

On the www.thomsongrassvalley.com web site you get further information on Thomson/Grass Valley and our products.

For Sales and Service, please contact your local dealer.

To find the account representative, dealer, or distributor nearest to you, go to www.thomsongrassvalley.com/indigo.

grass valley

END-OF-LIFE PRODUCT RECYCLING NOTICE

Grass Valley's innovation and excellence in product design also extends to the programs we've established to manage the recycling of our products. Grass Valley has developed a comprehensive end-of-life product take back program for recycle or disposal of end-of-life products. Our program meets the requirements of the European Union's WEEE Directive, the United States Environmental Protection Agency, and U.S. state and local agencies.

Grass Valley's end-of-life product take back program assures proper disposal by use of Best Available Technology. This program accepts any Grass Valley branded equipment. Upon request, a Certificate of Recycling or a Certificate of Destruction, depending on the ultimate disposition of the product, can be sent to the requester.

Grass Valley will be responsible for all costs associated with recycling and disposal, including freight. However, you are responsible for the removal of the equipment from your facility and packing the equipment to make it ready for pickup.

For further information on the Grass Valley product take back system please contact Grass Valley at + 800 80 80 20 20 or +33 1 48 25 20 20 from most other countries. In the U.S. and Canada please call 800-547-8949 or 530-478-4148, and ask to be connected to the EH&S Department. Additional information concerning the program can be found at: www.thomsongrassvalley.com/environment

THOMSON images & beyond

CE Conformity

This product is in conformity with the following standards, corresponding to the provisions of 89/336/EEC and 73/23/EEC:

Standard	Version	Standard	Version
EN 55103-1;-2 / Class A	1997-06	EN 61000-4-4	2002-07
EN 55022 / Class A	2000-05	EN 61000-4-5	2001-12
EN 61000-4-2	2001-12	EN 61000-4-6	2001-12
EN 61000-4-3	2001-12	EN 61000-4-11	2001-4-11

Contents

Section 1 — Safety Summary 5

Safety Terms and Symbols 5
Terms in This Manual 5
Terms on the Product 5
Symbols on the Product 6
Warnings 6
Cautions 7

Section 2 — Technical Specifications 9

Physical Dimensions 9
Physical Mounting 10
Rack-Mount Connections 10
Preliminary Specifications 11
Video Standards 11
Video Input Connectors 11
Video Output Connectors 11
Analog Audio Input Connectors 12
Analog Audio Output Connectors 12
Digital Audio Input/Output 12
Control and Interface 13
Technical Specifications 13
Power Supply 13
Environmental Data 13

Section 3 — Cabling 15

Section 4 — Functional Overview 17

SD Signal View 18
Hi-Resolution Video Signal Flow 19
Audio Signal Flow 20
AES/EBU Pin Out 21

Section 5 — External Device Control 23

Control Signal Flow 23
GPO/GPI I/O, Tally Pin Out 24
Turbo Connections 26
Edius Connections 26
Other Connections 27

Section 6 — Replaceable Components 29

Hi-Resolution Card 29

Compact Flash 30

Section 1

Safety Summary

Read and follow the important safety information below, noting especially those instructions related to risk of fire, electric shock or injury to persons. Additional specific warnings not listed here may be found throughout the manual.

WARNING Any instructions in this manual that require opening the equipment cover or enclosure are for use by qualified service personnel only. To reduce the risk of electric shock, do not perform any servicing other than that contained in the operating instructions unless you are qualified to do so.

Safety Terms and Symbols

Terms in This Manual

Safety-related statements may appear in this manual in the following form:

WARNING Warning statements identify conditions or practices that may result in personal injury or loss of life.

CAUTION Caution statements identify conditions or practices that may result in damage to equipment or other property, or which may cause equipment crucial to your business environment to become temporarily non-operational.

Terms on the Product

The following terms may appear on the product:

DANGER — A personal injury hazard is immediately accessible as you read the marking.

WARNING — A personal injury hazard exists but is not immediately accessible as you read the marking.

CAUTION — A hazard to property, product, and other equipment is present.

Symbols on the Product

The following symbols may appear on the product:

Indicates that dangerous high voltage is present within the equipment enclosure that may be of sufficient magnitude to constitute a risk of electric shock.

Indicates that user, operator or service technician should refer to product manual(s) for important operating, maintenance, or service instructions.

This is a prompt to note fuse rating when replacing fuse(s). The fuse referenced in the text must be replaced with one having the ratings indicated.

Identifies a protective grounding terminal which must be connected to earth ground prior to making any other equipment connections.

Identifies an external protective grounding terminal which may be connected to earth ground as a supplement to an internal grounding terminal.

Indicates that static sensitive components are present which may be damaged by electrostatic discharge. Use anti-static procedures, equipment and surfaces during servicing.

Warnings

The following warning statements identify conditions or practices that can result in personal injury or loss of life.

Dangerous voltage or current may be present — Disconnect power and remove battery (if applicable) before removing protective panels, soldering, or replacing components.

Do not service alone — Do not internally service this product unless another person capable of rendering first aid and resuscitation is present.

Remove jewelry — Prior to servicing, remove jewelry such as rings, watches, and other metallic objects.

Avoid exposed circuitry — Do not touch exposed connections, components or circuitry when power is present.

Use proper power cord — Use only the power cord supplied or specified for this product.

Ground product — Connect the grounding conductor of the power cord to earth ground.

Operate only with covers and enclosure panels in place — Do not operate this product when covers or enclosure panels are removed.

Use correct fuse — Use only the fuse type and rating specified for this product.

Use only in dry environment — Do not operate in wet or damp conditions.

Use only in non-explosive environment — Do not operate this product in an explosive atmosphere.

High leakage current may be present — Earth connection of product is essential before connecting power.

Double pole neutral fusing — Disconnect mains power prior to servicing.

Avoid mechanical hazards — Allow the fan to come to a stop before servicing.

Cautions

The following caution statements identify conditions or practices that can result in damage to equipment or other property

Do not open the device — Unauthorized opening will void warranty.

Use correct power source — Do not operate this product from a power source that applies more than the voltage specified for the product.

Provide proper ventilation — To prevent product overheating, provide equipment ventilation in accordance with installation instructions. Do not deposit any papers beneath the device — they could affect ventilation. Place device only on a plane face.

Use anti-static procedures — Static sensitive components are present which may be damaged by electrostatic discharge. Use anti-static procedures, equipment and surfaces during servicing.

Do not use CF card with a PC — The CF card is specially formatted. The software stored on the CF card could be deleted.

Do not operate with suspected equipment failure — If you suspect product damage or equipment failure, have the equipment inspected by qualified service personnel.

Route cable properly — Route power cords and other cables so that they are not likely to be damaged. Properly support heavy cable bundles to avoid connector damage.

Use correct power supply cords — Power cords for this equipment, if provided, meet all regional electrical codes. Operation of this equipment at voltages exceeding 130 VAC requires power supply cords which comply with NEMA configurations. International power cords, if provided, have the approval of the country of use.

Use correct replacement battery — This product may contains a battery. To reduce the risk of explosion, check polarity and replace only with the same or equivalent type recommended by manufacturer. Dispose of used batteries according to the manufacturer's instructions.

The unit does not contain any user serviceable parts. If problems arise, please contact your local dealer.

Section 2

Technical Specifications

Physical Dimensions

All dimensions shown in millimeters.

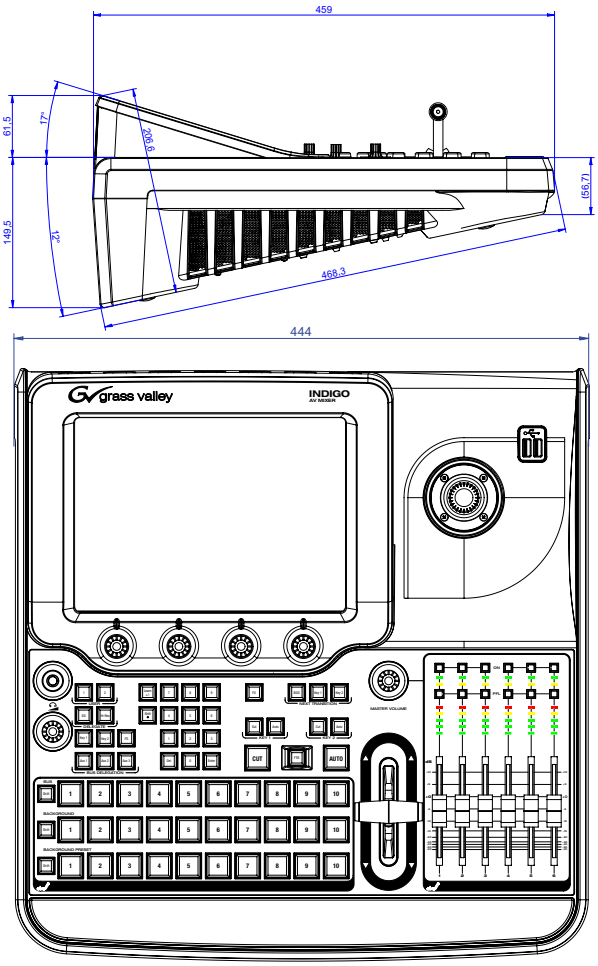

Figure 1. Physical Dimensions of INDIGO

Weight:	INDIGO SD	9 kg	(19.8 lbs)
	INDIGO XD	9,5 kg	(20.9 lbs)

Physical Mounting

The Indigo AV Mixer is a single unit with no separate frame so no rack space is required. All connections mount directly to the back of the unit at the desk. Indigo is designed to sit on a desk and does not require a hole cut into a desk top.

If it is preferred to mount the unit within a desktop, care should be taken to:

- Not block any air vents (sides and back) or the fan cover on the bottom of the unit.
- Leave an access area on the back of the unit for cable attachments.

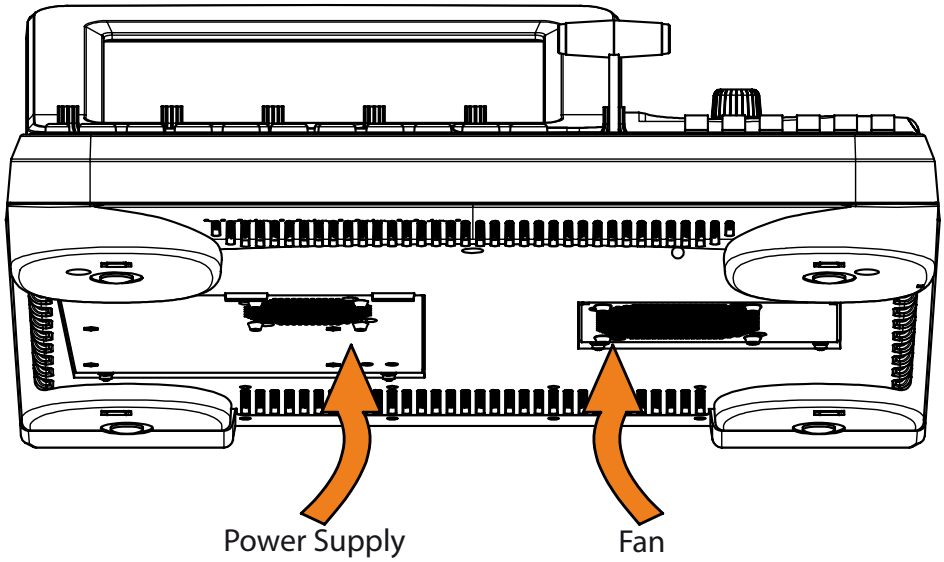

Figure 2. Bottom View of INDIGO (Power Supply and Fan)

Rack-Mount Connections

Indigo is small enough to fit inside of a flight case or on a rack-mounted shelf. It does not have *ears* for bolting directly to a rack, but it does have threaded bolt holes in the bottom of the feet to allow the unit to be firmly secured to the shelf. The bolts are size M5 (metric) and should not be more that 10 mm in length to avoid shorting out the unit by connection with the ground-plate.

Preliminary Specifications

Video Standards

- NTSC/PAL: 50/59.94 Hz
- HD-SDI: SMPTE 292M (720p or 1080i)
- SD-SDI: SMPTE 272M (525 lines/625 lines) 8-bit
- Composite: (525 lines/625 lines) 8-bit
- DVI-I:
  - 640x480 up to 1280x1024 @ 60 Hz/75 Hz

Video Input Connectors

- 6 SD-SDI (BNC)
- 6 composite/SD-SDI (shared BNC)
- 4 S-Video (4-pin mini DIN)
- 2 DV25 FireWire (6-pin IEEE 1394)
- 2 HD-SDI (BNC)*
- 2 DVI-I*

* Optional

Video Output Connectors

PGM

- 2 composite (BNC)
- 1 S-Video (4-pin mini DIN)
- 2 SD-SDI (BNC)
- 1 DVI-I*

PVW

- 1 composite (BNC)
- 1 S-VIDEO (4-pin mini DIN)
- 1 SD-SDI (BNC)
- 1 DVI-I*

AUX

- 3 composite (BNC)
- 3 SD-SDI (BNC)

Analog Audio Input Connectors

- 2 stereo RCA pair (unbalanced)
- 6 TRS analog stereo (balanced)
- 4 XLR analog mono (balanced) (microphone)

Analog Audio Output Connectors

Main

- 1 stereo RCA pair (unbalanced)
- 1 XLR stereo pair (balanced)

Submix/Delay

- 1 RCA stereo pair (unbalanced)
- 1 TRS stereo pair (balanced)

Headphones

- 2 TRS stereo (unbalanced)
- Located on front and rear panels

Digital Audio Input/Output

- Inputs: 6 AES/EBU (25-pin D-sub)
- Outputs: 2 x AES/EBU (25-pin D-sub)
- Embedded audio within FireWire (IEEE 1394)
- Embedded audio within SD-SDI

Control and Interface

- 2 Ref Sync out (BNC)
- 1 Ref Sync loop in/out (BNC)
- 2 RS-422 (9-pin D-sub)
- 1 GPI I/O /TALLY (50-pin D-sub)
- 2 USB (Standard-A) front panel
- 1 100Base-T Ethernet

Technical Specifications

Power Supply

• Line voltage	100 V ... 240 V AC +/- 10% auto range, power factor control
• Line frequency	50/60 Hz +/- 5%
• Power consumption	max. 220 W
• Leakage current	< 2,5 mA
• USB Power	max 0,5 A (all devices)

Environmental Data

• Storage temperature	-20°C to +70°C (-4°F to 158°F)
• Operating temperature	+5°C to +40°C (41°F to 104°F)
• Relative humidity	≤ 90% non-condensing
• Electromagnetic environment	E2 (according to EN55103-1, -2)

Section 3

Cabling

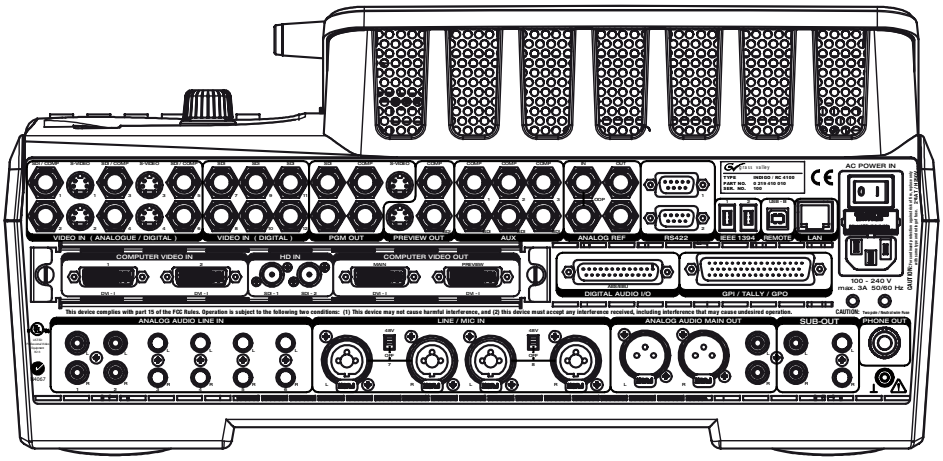

Figure 3. INDIGO Back View (including HD-Board)

For detailed video, audio, GPI and control input/output cabling instructions please refer to the **Indigo AV Mixer Quick Start Guide**.

Section 4

Functional Overview

The Indigo AV Mixer combines characteristics of a number of devices and then scales and synchronizes the various inputs for an integrated presentation.

The SD video section includes external input connections for SD-SDI, Composite, S-Video and DV-25. The SD section also has access to internal sources scaled down from Hi-res as well as still stores and a color matte.

The Hi-resolution video section has external input connections for HD-SDI and DVI-I (DVI-I can use a breakout cable to also accept VGA and RGB computer sources). Internally the Hi-resolution section has access to upscaled SD sources, still stores and a color matte.

The SD and Hi-resolution sources are processed somewhat differently. To trace the complete video flow through the mixer, please see the detailed diagrams in the sections which follow.

Audio inputs may be either digital or analog and can be deembedded from SDSDI or DV25 signals.

Machine control of third party devices such as the Turbo iDDR is accomplished through either RS422 or Ethernet connections.

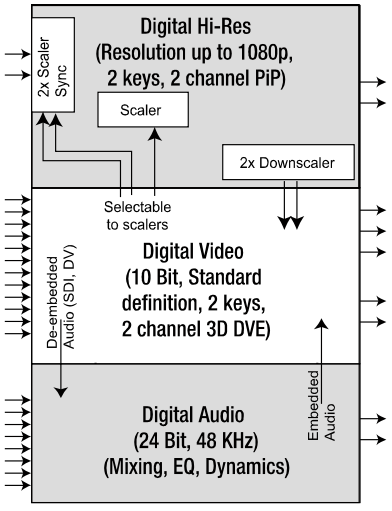

Figure 4. Block Diagram: Functional Overview

SD Signal View

A total of 12 SD sources may be assigned to buttons from the available inputs. Keys may be either self (video) keyed or separate inputs for key and fill. Stills may be captured from incoming video or downloaded via USB in JPG, PNG or TGA file formats.

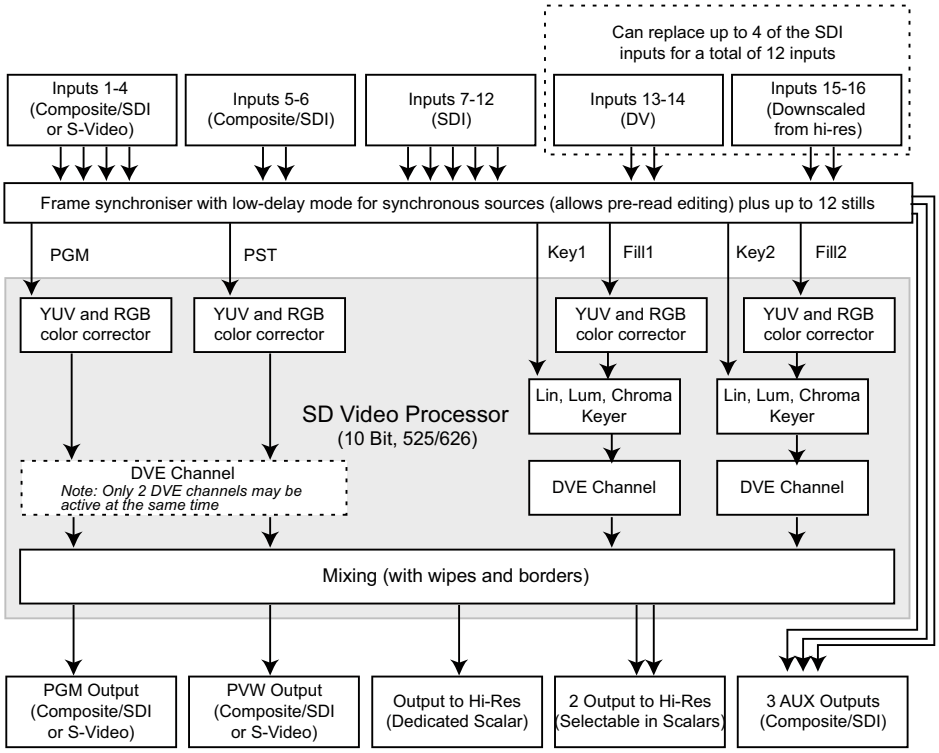

Figure 5. Block Diagram: SD Signal View

Hi-Resolution Video Signal Flow

A total of three Hi-resolution sources may be assigned to buttons from the available inputs. Two of the sources may be selected from either the external inputs or internal inputs and the third source is always upscaled from an SD source (may be a single source or the entire PGM mix). Key may be either self (video) keyed or two separate inputs for key and fill. Stills may be captured from incoming video or downloaded via USB in JPG, PNG or TGA file formats.

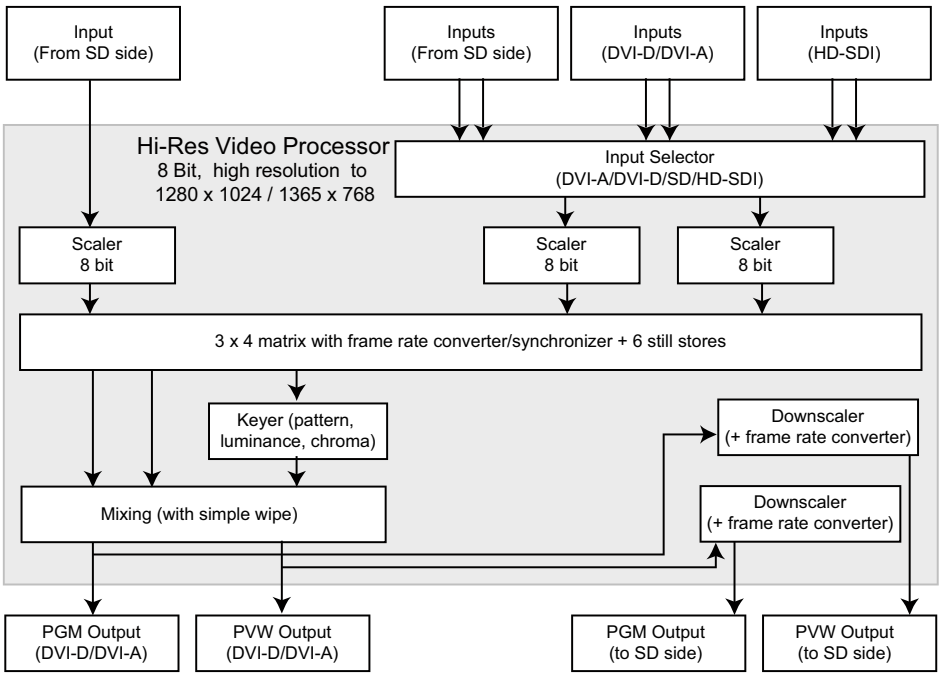

Figure 6. Block Diagram: Hi-Resolution Video Signal Flow

Audio Signal Flow

All inputs shown below are stereo. Any input may be assigned to any fader using the internal menus.

Although there are only six faders, control for all inputs can be accessed through the touchscreen menu. The two inputs not assigned to faders may still be used for Audio Follow Video (AFV). In addition, more than one channel may be assigned to a video source for AFV.

The sub out may be any part of the incoming signals. The sub may also be delayed to accommodate delays caused by speaker distance in house sound.

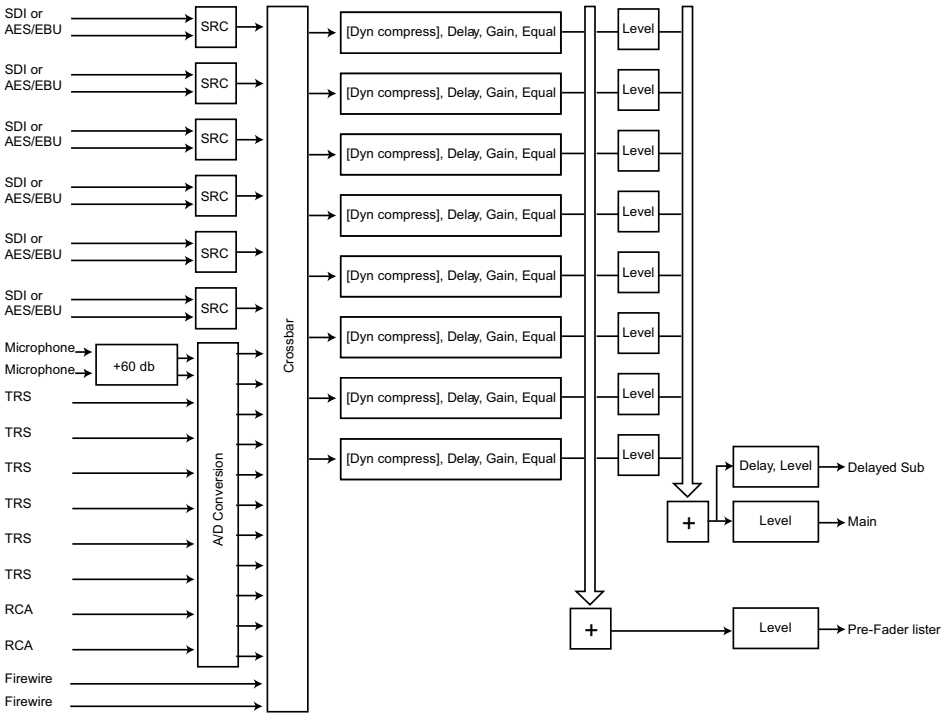

Figure 7. Block Diagram: Audio Signal Flow

AES/EBU Pin Out

Digital audio I/O are available over SD-SDI, DV25, or AES/EBU. The pin out for the AES/EBU connector is shown below.

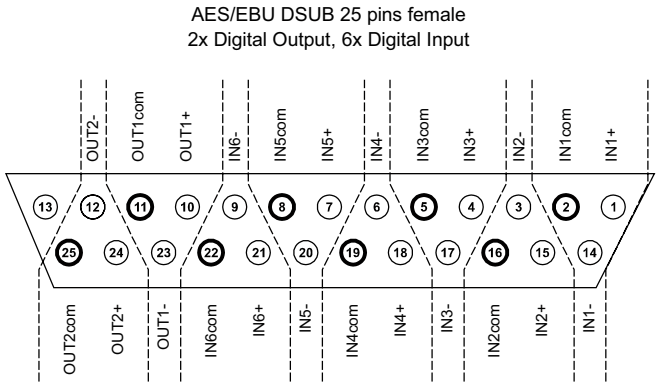

Figure 8. AES/EBU Pin Out

Digital Audio Input	Description	Pin
1	IN1+	1
	IN1-	14
	IN1com	2
2	IN2+	15
	IN2-	3
	IN2com	16
3	IN3+	4
	IN3-	17
	IN3com	5
4	IN4+	18
	IN4-	6
	IN4com	19
5	IN5+	7
	IN5-	20
	IN5com	8
6	IN6+	21
	IN6-	9
	IN6com	22
Digital Audio Output	**Description**	**Pin**
1	OUT1+	10
	OUT1-	23
	OUT1com	11
2	OUT2+	24
	OUT2-	12
	OUT2com	25

Section 5

External Device Control

Control Signal Flow

Reference signal is analog blackburst only.
Editor control is achieved through GVG 100/200 protocol.
Device control is achieved through AMP or BVW75 protocol.
USB-B connection is not used on the device in its current release.

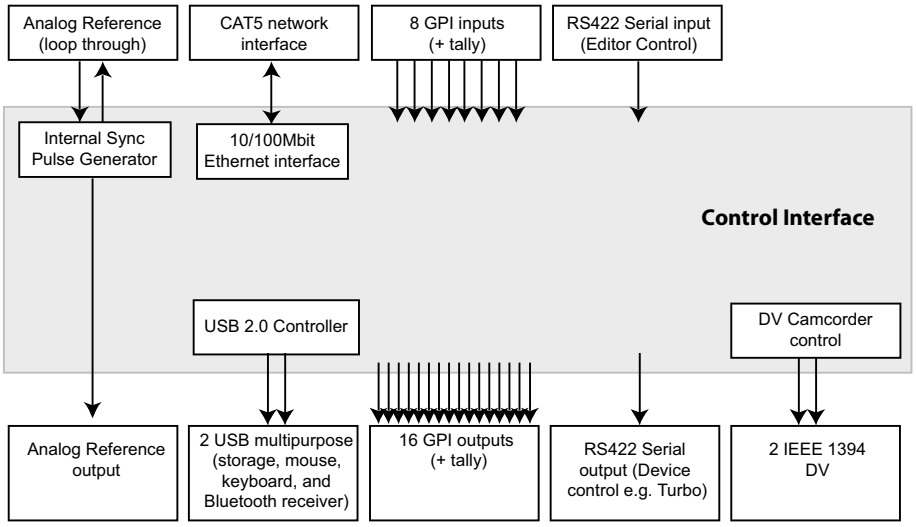

Figure 9. Block Diagram: Control Signal Flow

GPO/GPI I/O, Tally Pin Out

The following Indigo functions are currently available for external control through GPI inputs.

- Turn audio channels on/off
- Turn audio channels PFL
- Recall timelines
- Trigger Auto/Cut for any of the transition elements (or the complete ME)

GPI outputs can be set up for external device control or tally.

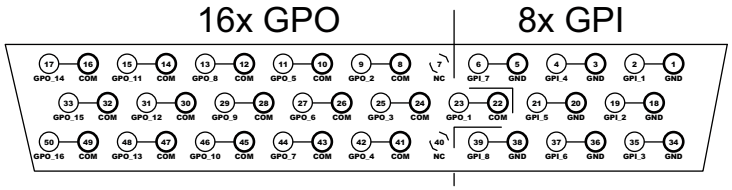

Figure 10. GPO/GPI I/O, Tally Pin Out

GPO	Description	Pin
1	COM	22
	GPO_1	23
2	COM	8
	GPO_2	9
3	COM	24
	GPO_3	25
4	COM	41
	GPO_4	42
5	COM	10
	GPO_5	11
6	COM	26
	GPO_6	27
7	COM	43
	GPO_7	44
8	COM	12
	GPO_8	13
9	COM	28
	GPO_9	29
10	COM	45
	GPO_10	46
11	COM	14
	GPO_11	15

GPO	Description	Pin
12	COM	30
	GPO_12	31
13	COM	47
	GPO_13	48
14	COM	16
	GPO_14	17
15	COM	32
	GPO_15	33
16	COM	49
	GPO_16	50
GPI	**Description**	**Pin**
1	GND	1
	GPI_1	2
2	GND	18
	GPI_2	19
3	GND	34
	GPI_3	35
4	GND	3
	GPI_4	4
5	GND	20
	GPI_5	21
6	GND	36
	GPI_6	37
7	GND	5
	GPI_7	6
8	GND	38
	GPI_8	39

The Indigo tally system has 16 universal relays that interface source tally and GPI Output information to an external system through the Tally Port connector. The channels can be assigned in the setup menu.

The nominal rating specification for each relay is 2A, 30 V.

Turbo Connections

The recommended video connection between Turbo and Indigo is either SD-SDI or DVI-I. Audio may be connected via analog connectors or digitally from Turbo's SPDIF output to Indigo's AES-EBU input. Remote control of Indigo can be accomplished via RS422 or Ethernet connections.

Out	**In**	**Out**	**In**
Analog composite	Analog composite	Analog composite	Analog composite
S-Video	S-Video	S-Video	S-Video
Y, Pr, Pb			Y, Pr, Pb
SD-SDI	SD-SDI	SD-SDI	SD-SDI
	DV (streaming)	DV (streaming) with next software release	DV (streaming)
			HDV (streaming)
DVI (analog & digital) - Up to 1365 x 768p - 1920 x 1080i	DVI-I (analog & digital) - Up to 1920 x 1080i	DVI-I (analog & digital) - Up to 1920 x 1080i	
	HD-SDI - Up to 1920 x 1080i or 720p		
XLR analog audio	XLR analog audio	XLR analog audio	XLR analog audio
SPDIF digital audio	AES/EBU digital audio	AES/EBU digital audio	SPDIF digital audio

Note The connection from SPDIF to AES/EBU and vice versa requires adapters.

Edius Connections

Connection between Indigo and Edius is typically via SD-SDI with embedded SDI audio. Indigo does not currently control Edius.

Other Connections

Indigo's DVI-I connector can be adapted for use with other sources by the use of commonly available adapter cables.

Connection Type	Requirement
VGA computer	DVI-I (or DVI-A male to VGA male adapter
RGB video	DVI-I (or DVI-A) male to 5 BNC

Section 6

Replaceable Components

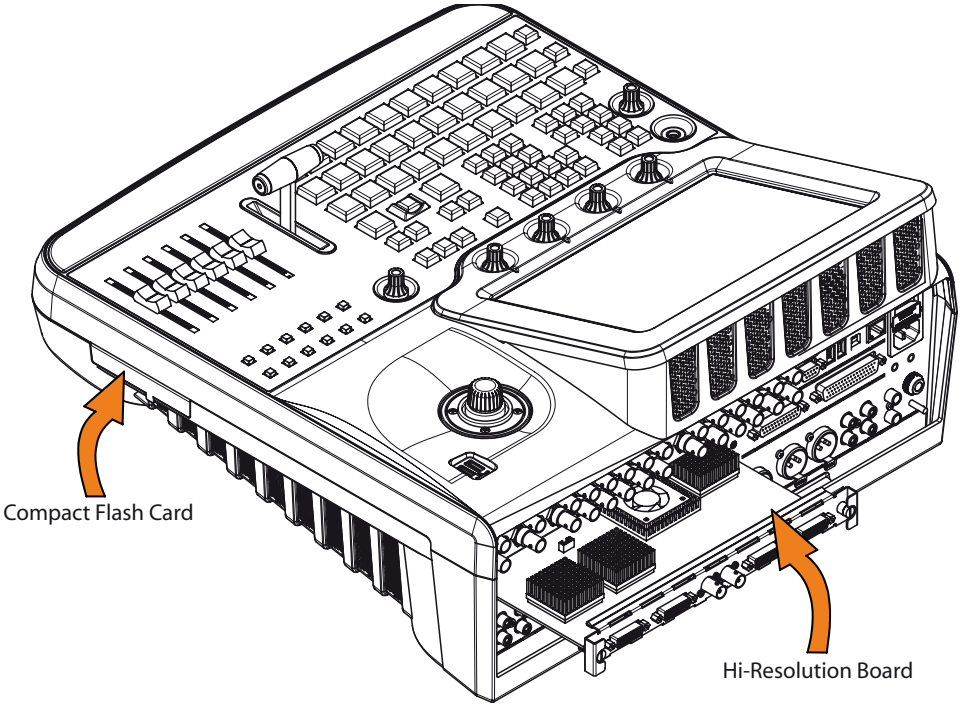

Figure 11. Compact Flash Card and Hi-Resolution Board Location

Hi-Resolution Card

If the Indigo AV Mixer was ordered with the high-resolution (HR) inputs, the HR I/O card will arrive uninstalled. Remove both the base unit and HR input card from the box and place on an anti-static work surface. With all power disconnected, remove cover plate on back of the Indigo unit by removing both screws. Gently and firmly slide the HR card into the open slot until it is flush with the back of the Indigo unit. Replace the screws to hold the card in place.

Compact Flash

The operating system software resides on a compact flash card which is inserted into Indigo as shown above. Under normal operating conditions, this card is never removed. Occasionally a software update may be required. This is accomplished by either changing out the compact flash card (recommended) or overwriting the files on the card. Specific instructions for updating the compact flash card will accompany the software update.

Prior to removing the compact flash card, save all mixer settings and stills to USB.

To update the software, with all power disconnected, open the side door and remove the compact flash card. After the card containing the new software version is inserted, power can be restored to Indigo.

Changing a compact flash card typically causes the system to revert to its defaults. Some setup may be required in addition to restoration of user settings from USB. See Operating Manual for complete instructions.

The compact flash card is a dedicated card for the mixer. Modifying or deleting the files on the card or adding additional files except as instructed by Grass Valley will cause Indigo to malfunction.