grass valley
A BELDEN BRAND

KALEIDO-MX 4K (3RU)

ULTRA HIGH-DEFINITION MULTIVIEWER

Hardware Description & Installation Manual

M933-7502-100

2015-06-02

www.grassvalley.com

Copyright & Trademark Notice

Copyright © 2015, Grass Valley USA, LLC. All rights reserved.

Belden, Belden Sending All The Right Signals, and the Belden logo are trademarks or registered trademarks of Belden Inc. or its affiliated companies in the United States and other jurisdictions. Grass Valley, Kaleido-MX 4K, Kaleido-X, Kayenne, Karrera, iControl, NVISION, and Densité are trademarks or registered trademarks of Grass Valley USA, LLC. Belden Inc., Grass Valley USA, LLC, and other parties may also have trademark rights in other terms used herein.

Terms and Conditions

Please read the following terms and conditions carefully. By using Kaleido multiviewer documentation, you agree to the following terms and conditions.

Grass Valley hereby grants permission and license to owners of Kaleido multiviewers to use their product manuals for their own internal business use. Manuals for Grass Valley products may not be reproduced or transmitted in any form or by any means, electronic or mechanical, including photocopying and recording, for any purpose unless specifically authorized in writing by Grass Valley.

A Grass Valley manual may have been revised to reflect changes made to the product during its manufacturing life. Thus, different versions of a manual may exist for any given product. Care should be taken to ensure that one obtains the proper manual version for a specific product serial number.

Information in this document is subject to change without notice and does not represent a commitment on the part of Grass Valley.

Warranty information is available from the Legal Terms and Conditions section of Grass Valley's website (www.grassvalley.com).

The SDHC Logo is a trademark of SD-3C, LLC.

Title	Kaleido-MX 4K (3RU) Hardware Description & Installation Manual
Part Number	M933-7502-100
Revision	2015-06-02, 19:13

Important Safeguards and Notices

This section provides important safety guidelines for operators and service personnel. Specific warnings and cautions appear throughout the manual where they apply. Please read and follow this important information, especially those instructions related to the risk of electric shock or injury to persons.

Symbols and Their Meanings

Indicates that dangerous high voltage is present within the equipment enclosure that may be of sufficient magnitude to constitute a risk of electric shock.

Indicates that the user, operator or service technician should refer to the product manuals for important operating, maintenance, or service instructions.

This is a prompt to note the fuse rating when replacing fuses. The fuse referenced in the text must be replaced with one having the ratings indicated.

Identifies a protective grounding terminal which must be connected to earth ground prior to making any other equipment connections.

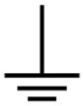

Identifies an external protective grounding terminal which may be connected to earth ground as a supplement to an internal grounding terminal.

Indicates that static sensitive components are present, which may be damaged by electrostatic discharge. Use anti-static procedures, equipment and surfaces during servicing.

Indicates that the equipment has more than one power supply cord, and that all power supply cords must be disconnected before servicing to avoid electric shock.

The presence of this symbol in or on Grass Valley equipment means that it has been tested and certified as complying with applicable Canadian Standard Association (CSA) regulations and recommendations for USA/Canada.

The presence of this symbol in or on Grass Valley equipment means that it has been tested and certified as complying with applicable Underwriters Laboratory (UL) regulations and recommendations for USA/Canada.

The presence of this symbol in or on Grass Valley equipment means that it has been tested and certified as complying with applicable Intertek Testing Services regulations and recommendations for USA/Canada.

The presence of this symbol in or on Grass Valley product means that it complies with all applicable European Union (CE) directives.

The presence of this symbol in or on Grass Valley product means that it complies with safety of laser product applicable standards.

Warnings

A warning indicates a possible hazard to personnel, which may cause injury or death. Observe the following general warnings when using or working on this equipment:

- Appropriately listed/certified mains supply power cords must be used for the connection of the equipment to the mains voltage at either 120 V AC or 240 V AC.
- This product relies on the building's installation for short-circuit (over-current) protection. Ensure that a fuse or circuit breaker for 120 V AC or 240 V AC is used on the phase conductors.
- Any instructions in this manual that require opening the equipment cover or enclosure are for use by qualified service personnel only.
- Do not operate the equipment in wet or damp conditions.
- This equipment is grounded through the grounding conductor of the power cords. To avoid electrical shock, plug the power cords into a properly wired receptacle before connecting the equipment inputs or outputs.
- Route power cords and other cables so they are not likely to be damaged. Properly support heavy cable bundles to avoid connector damage.
- Disconnect power before cleaning the equipment. Do not use liquid or aerosol cleaners; use only a damp cloth.
- Dangerous voltages may exist at several points in this equipment. To avoid injury, do not touch exposed connections and components while power is on.
- High leakage current may be present. Earth connection of product is essential before connecting power.
- Prior to servicing, remove jewelry such as rings, watches, and other metallic objects.
- To avoid fire hazard, use only the fuse type and rating specified in the service instructions for this product, or on the equipment.
- To avoid explosion, do not operate this equipment in an explosive atmosphere.
- Use proper lift points. Do not use door latches to lift or move equipment.
- Avoid mechanical hazards. Allow all rotating devices to come to a stop before servicing.
- Have qualified service personnel perform safety checks after any service.

Cautions

A caution indicates a possible hazard to equipment that could result in equipment damage. Observe the following cautions when operating or working on this equipment:

- This equipment is meant to be installed in a restricted access location.

- When installing this equipment, do not attach the power cord to building surfaces.
- Products that have no on/off switch, and use an external power supply must be installed in proximity to a main power outlet that is easily accessible.
- Use the correct voltage setting. If this product lacks auto-ranging power supplies, before applying power ensure that each power supply is set to match the power source.
- Provide proper ventilation. To prevent product overheating, provide equipment ventilation in accordance with the installation instructions.
- Do not operate with suspected equipment failure. If you suspect product damage or equipment failure, have the equipment inspected by qualified service personnel.
- To reduce the risk of electric shock, do not perform any servicing other than that contained in the operating instructions unless you are qualified to do so. Refer all servicing to qualified service personnel. Servicing should be done in a static-free environment.
- This unit may have more than one power supply cord. Disconnect all power supply cords before servicing to avoid electric shock.
- Follow static precautions at all times when handling this equipment.

Electrostatic Discharge (ESD) Protection

Electrostatic discharge occurs when electronic components are improperly handled and can result in intermittent failure or complete damage adversely affecting an electrical circuit. When you remove and replace any card from a frame always follow ESD-prevention procedures:

- Ensure that the frame is electrically connected to earth ground through the power cord or any other means if available.
- Wear an ESD wrist strap ensuring that it makes good skin contact. Connect the grounding clip to an *unpainted surface* of the chassis frame to safely ground unwanted ESD voltages. If no wrist strap is available, ground yourself by touching the *unpainted* metal part of the chassis.
- For safety, periodically check the resistance value of the antistatic strap, which should be between 1 and 10 megohms.
- When temporarily storing a card make sure it is placed in an ESD bag.
- Cards in an earth grounded metal frame or casing do not require any special ESD protection.

Cautions for LCD and TFT Displays

Excessive usage may harm your vision. Rest for 10 minutes for every 30 minutes of usage.

If the LCD or TFT glass is broken, handle glass fragments with care when disposing of them. If any fluid leaks out of a damaged glass cell, be careful not to get the liquid crystal fluid in your mouth or skin. If the liquid crystal touches your skin or clothes, wash it off immediately using soap and water. Never swallow the fluid. The toxicity is extremely low but caution should be exercised at all times.

Mesures de sécurité et avis importants

La présente section fournit des consignes de sécurité importantes pour les opérateurs et le personnel de service. Des avertissements ou mises en garde spécifiques figurent dans le manuel, dans les sections où ils s'appliquent. Prenez le temps de bien lire les consignes et assurez-vous de les respecter, en particulier celles qui sont destinées à prévenir les décharges électriques ou les blessures.

Signification des symboles utilisés

Signale la présence d'une tension élevée et dangereuse dans le boîtier de l'équipement ; cette tension peut être suffisante pour constituer un risque de décharge électrique.

Avertit l'utilisateur, l'opérateur ou le technicien de maintenance que des instructions importantes relatives à l'utilisation et à l'entretien se trouvent dans la documentation accompagnant l'équipement.

Invite l'utilisateur, l'opérateur ou le technicien de maintenance à prendre note du calibre du fusible lors du remplacement de ce dernier. Le fusible auquel il est fait référence dans le texte doit être remplacé par un fusible du même calibre.

Identifie une borne de mise à la terre de protection. Il faut relier cette borne à la terre avant d'effectuer toute autre connexion à l'équipement.

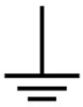

Identifie une borne de mise à la terre externe qui peut être connectée en tant que borne de mise à la terre supplémentaire.

Signale la présence de composants sensibles à l'électricité statique et qui sont susceptibles d'être endommagés par une décharge électrostatique. Utilisez des procédures, des équipements et des surfaces antistatiques durant les interventions d'entretien.

Le symbole ci-contre signifie que l'appareil comporte plus d'un cordon d'alimentation et qu'il faut débrancher tous les cordons d'alimentation avant toute opération d'entretien, afin de prévenir les chocs électriques.

La marque C-CSA-US certifie que l'appareil visé a été testé par l'Association canadienne de normalisation (CSA) et reconnu conforme aux exigences applicables en matière de sécurité électrique en vigueur au Canada et aux États-Unis.

La marque C-UL-US certifie que l'appareil visé a été testé par Underwriters Laboratory (UL) et reconnu conforme aux exigences applicables en matière de sécurité électrique en vigueur au Canada et aux États-Unis.

La marque ETL Listed d'Intertek pour le marché Nord-Américain certifie que l'appareil visé a été testé par Intertek et reconnu conforme aux exigences applicables en matière de sécurité électrique en vigueur au Canada et aux États-Unis.

Le marquage CE indique que l'appareil visé est conforme aux exigences essentielles des directives applicables de l'Union européenne en matière de sécurité électrique, de compatibilité électromagnétique et de conformité environnementale.

Le symbole ci-contre sur un appareil Grass Valley ou à l'intérieur de l'appareil indique qu'il est conforme aux normes applicables en matière de sécurité laser.

Avertissements

Les avertissements signalent des conditions ou des pratiques susceptibles d'occasionner des blessures graves, voire fatales. Veuillez vous familiariser avec les avertissements d'ordre général ci-dessous :

- Un cordon d'alimentation dûment homologué doit être utilisé pour connecter l'appareil à une tension de secteur de 120 V CA ou 240 V CA.
- La protection de ce produit contre les courts-circuits (surintensités) dépend de l'installation électrique du bâtiment. Assurez-vous qu'un fusible ou un disjoncteur pour 120 V CA ou 240 V CA est utilisé sur les conducteurs de phase.
- Dans le présent manuel, toutes les instructions qui nécessitent d'ouvrir le couvercle de l'équipement sont destinées exclusivement au personnel technique qualifié.
- N'utilisez pas cet appareil dans un environnement humide.
- Cet équipement est mis à la terre par le conducteur de mise à la terre des cordons d'alimentation. Pour éviter les chocs électriques, branchez les cordons d'alimentation sur une prise correctement câblée avant de brancher les entrées et sorties de l'équipement.
- Acheminez les cordons d'alimentation et autres câbles de façon à ce qu'ils ne risquent pas d'être endommagés. Supportez correctement les enroulements de câbles afin de ne pas endommager les connecteurs.
- Coupez l'alimentation avant de nettoyer l'équipement. Ne pas utiliser de nettoyants liquides ou en aérosol. Utilisez uniquement un chiffon humide.
- Des tensions dangereuses peuvent exister en plusieurs points dans cet équipement. Pour éviter toute blessure, ne touchez pas aux connexions ou aux composants exposés lorsque l'appareil est sous tension.
- Avant de procéder à toute opération d'entretien ou de dépannage, enlevez tous vos bijoux (notamment vos bagues, votre montre et autres objets métalliques).
- Pour éviter tout risque d'incendie, utilisez uniquement les fusibles du type et du calibre indiqués sur l'équipement ou dans la documentation qui l'accompagne.
- Ne pas utiliser cet appareil dans une atmosphère explosive.
- Présence possible de courants de fuite. Un raccordement à la masse est indispensable avant la mise sous tension.

- Après tout travail d'entretien ou de réparation, faites effectuer des contrôles de sécurité par le personnel technique qualifié.

Mises en garde

Les mises en garde signalent des conditions ou des pratiques susceptibles d'endommager l'équipement. Veuillez vous familiariser avec les mises en garde ci-dessous :

- L'appareil est conçu pour être installé dans un endroit à accès restreint.
- Au moment d'installer l'équipement, ne fixez pas les cordons d'alimentation aux surfaces intérieures de l'édifice.
- Les produits qui n'ont pas d'interrupteur marche-arrêt et qui disposent d'une source d'alimentation externe doivent être installés à proximité d'une prise de courant facile d'accès.
- Si l'équipement n'est pas pourvu d'un modules d'alimentation auto-adaptables, vérifiez la configuration de chacun des modules d'alimentation avant de les mettre sous tension.
- Assurez une ventilation adéquate. Pour éviter toute surchauffe du produit, assurez une ventilation de l'équipement conformément aux instructions d'installation.
- N'utilisez pas l'équipement si vous suspectez un dysfonctionnement du produit. Faites-le inspecter par un technicien qualifié.
- Pour réduire le risque de choc électrique, n'effectuez pas de réparations autres que celles qui sont décrites dans le présent manuel, sauf si vous êtes qualifié pour le faire. Confiez les réparations à un technicien qualifié. La maintenance doit se réaliser dans un milieu libre d'électricité statique.
- L'appareil peut comporter plus d'un cordon d'alimentation. Afin de prévenir les chocs électriques, débrancher tous les cordons d'alimentation avant toute opération d'entretien.
- Veillez à toujours prendre les mesures de protection antistatique appropriées quand vous manipulez l'équipement.

Protection contre les décharges électrostatiques (DES)

Une décharge électrostatique peut se produire lorsque des composants électroniques ne sont pas manipulés de manière adéquate, ce qui peut entraîner des défaillances intermittentes ou endommager irrémédiablement un circuit électrique. Au moment de remplacer une carte dans un châssis, prenez toujours les mesures de protection antistatique appropriées :

- Assurez-vous que le châssis est relié électriquement à la terre par le cordon d'alimentation ou tout autre moyen disponible.
- Portez un bracelet antistatique et assurez-vous qu'il est bien en contact avec la peau. Connectez la pince de masse à une *surface non peinte* du châssis pour détourner à la terre toute tension électrostatique indésirable. En l'absence de bracelet antistatique, déchargez l'électricité statique de votre corps en touchant une surface métallique *non peinte* du châssis.

- Pour plus de sécurité, vérifiez périodiquement la valeur de résistance du bracelet antistatique. Elle doit se situer entre 1 et 10 mégohms.
- Si vous devez mettre une carte de côté, assurez-vous de la ranger dans un sac protecteur antistatique.
- Les cartes qui sont reliées à un châssis ou boîtier métallique mis à la terre ne nécessitent pas de protection antistatique spéciale.

Précautions pour les écrans LCD et TFT

Regarder l'écran pendant une trop longue période de temps peut nuire à votre vision. Prenez une pause de 10 minutes, après 30 minutes d'utilisation.

Si l'écran LCD ou TFT est brisé, manipulez les fragments de verre avec précaution au moment de vous en débarrasser. veillez à ce que le cristal liquide n'entre pas en contact avec la peau ou la bouche. En cas de contact avec la peau ou les vêtements, laver immédiatement à l'eau savonneuse. Ne jamais ingérer le liquide. La toxicité est extrêmement faible, mais la prudence demeure de mise en tout temps.

Recycling

Visit www.grassvalley.com for recycling information.

Certification and Compliance

Safety Compliance

This equipment complies with the European Directive 2006/95/EC – Low voltage directive, in addition to the following standards on safety of information technology equipment:

- CAN/CSA 22.2 No. 60950-1-07, 2nd Edition, A1:2011
- UL 60950-1:2007, 2nd Edition
- IEC 60950-1:2005, 2nd Edition, A1:2009
- EN 60950-1:2006, A11:2009, A1:2010, A12:2011

The power cords supplied with this equipment meet the appropriate national standards for the country of destination.

Electromagnetic Compatibility

This equipment has been tested for verification of compliance with FCC Part 15, Subpart B requirements for class A digital devices.

Note: This equipment has been tested and found to comply with the limits for a Class A digital device, pursuant to Part 15 of the FCC rules. These limits are designed to provide reasonable protection against harmful interference when the equipment is operated in a commercial environment. This equipment generates, uses, and can radiate radio frequency energy, and, if not installed and used in accordance with the instruction manual, may cause harmful interference to radio communications. Operation of this equipment in a residential area is likely to cause harmful interference in which case the user will be required to correct the interference at his own expense.

This equipment has been tested and found to comply with the requirements of the EMC directive 2004/108/EC:

- EN 55022 Class A Radiated and conducted emissions
- EN 61000-3-2 Limits for harmonic current emissions
- EN 61000-3-3 Limitation of voltage fluctuations and flicker
- EN 61000-4-2 Electrostatic discharge immunity
- EN 61000-4-3 Radiated, radio-frequency, electromagnetic field immunity
- EN 61000-4-4 Electrical fast transient immunity
- EN 61000-4-5 Surge transient immunity
- EN 61000-4-6 Conducted disturbances immunity
- EN 61000-4-11 Voltage dips, short interruptions and voltage variations immunity

Environmental Compliance

部件名称 Part name	有毒有害物质或元素 (Toxic or hazardous substances and elements)					
	铅 (Pb)	汞 (Hg)	镉 (Cd)	六价铬 (Cr6)	多溴联苯 (PBB)	多溴二苯 (PBDE)
电缆及电缆组件 Cables and cable assemblies	X	O	O	O	O	O
电路模块 Circuit modules	X	O	O	O	O	O
显示装置 Display assemblies	X	O	O	O	O	O
组装风扇 Fan assemblies	X	O	O	O	O	O
金属零件 Metal parts	X	O	O	O	O	O

O: 表示该有毒有害物质在该部件所有均质材料中的含量均在 SJ/T 11363-2006 规定的限量要求以下。

O: Indicates that this toxic or hazardous substance contained in all of the homogeneous materials for this part is below the limit requirement in SJ/T11363-2006.

X: 表示该有毒有害物质至少在该部件的某一均质材料中的含量超出 SJ/T 11363-2006 规定的限量要求。

X: Indicates that this toxic or hazardous substance contained in at least one of the homogeneous materials for this part is above the limit requirement in SJ/T11363-2006.

技术条款解释：此声明所依据之数据由 Grass Valley 环境管理部门向我们的部件供应商获取。Grass Valley 公司相信此信息的正确性，但由于数据来源于公司外部，我们无法保证它的完整和准确。所有这些特性可能在未获通知的情况下更改。

Technical explanations: This statement is based on the information provided by our suppliers of components and collected through our Grass Valley's environmental management system. Grass Valley believes this environmental information to be correct but cannot guarantee its completeness or accuracy as it is based on data received from sources outside our company. All specifications are subject to change without notice.

Table of Contents

1 Installation 1

Introduction 1
- Features 1
- Cards 2
- Available Options 2
- Frame Interface 3

Mechanical Installation 6
- Unpacking 6
- Handling the Front Door 7
- Mounting the Kaleido-MX 4K (3RU) in a Rack 8
- Ventilation 8

Signalling 8
- Output Modules 9
- System Control 10
- Input Modules 12
- Reference Modules 13
- GPI I/O Modules 13

Maintenance 14
- Replacing the CPU-ETH2 Controller Card 14
- Replacing Cards 14
- Replacing Power Supply Modules 15
- Replacing Frame Ventilation Fans 16
- Replacing the Air Filter 16

2 Operation 17

Card Button and LED Interface 18
- Kaleido-MX 4K Input Card Interface 18
- Kaleido-MX 4K Output Card Interface 20

Using the Densité Frame Control Panel 22
- Navigating the Local Control Panel Menu 22
- Local Control Panel Menu Structure 23

Remote Control Using iControl 24
- Kaleido-MX 4K Service Control Panels in iControl 24
- Output Settings Panel 26
- Network Settings Panel 27
- Info Panel 27

3 Specifications 31

Kaleido-MX 4K Inputs 31
- Video Inputs (32, 48, or 64) 31

Discrete Audio Inputs. 32
Kaleido-MX 4K Outputs 33
Kaleido-MX 4K Control. 34
Reference Inputs 34
LTC Inputs 34
Communication 34
GPI-1501 GPI I/O module 35
Kaleido-MX 4K (3RU) Frame 36

Contact Us 37

1 Installation

The Kaleido-MX 4K multiviewer system is ideal for production control rooms, trucks and outside broadcast operations.

Introduction

Available in two form factors (1 RU, and 3 RU), the Kaleido-MX 4K supports up to 64 video inputs. Pre-configured Kaleido-MX 4K systems are available in the following sizes:

Frame	Inputs × outputs
Kaleido-MX 4K (1RU) frame	16 inputs × 1 UHD output
Kaleido-MX 4K (3RU) frame	32 inputs × 1 UHD output 48 inputs × 1 UHD output 64 inputs × 1 UHD output

Features

Kaleido-MX 4K features

Uncompromised I/O capabilities	• Up to 64 inputs 3G/HD/SD SDI formats • Quad-link 3 Gb/s output or HDMI 2.0 output at 3840 × 2160 @ 59.94/50p
Unmatched image quality and layout flexibility	• Unmatched multiviewer picture quality and superior on-screen graphics. • Ultimate level of layout flexibility, with unlimited signal repetition and sizing across all displays, without blocking, grouping restrictions or bandwidth restrictions • Display up to 128 images (64 unique) on a 4K UHD display
Router and switcher integration	• Kaleido-MX 4K offers rich integration with the NVISION router family and Grass Valley's Kayenne/Karrera production switchers • Supports third-party routers and production switchers for tally and labels

Kaleido-MX 4K features *(continued)*

Robust and serviceable design	• Fast automated recovery after a *cold* spare is inserted into the frame • Hot-swappable modules and power supplies • 1 RU and 3 RU frame models with quiet cooling
Seamless control across multiple multiviewers	• Kaleido multiviewers can be *mixed-and-matched* to create a seamless monitoring system across a facility • Choice of control options such as standalone Kaleido-RCP2/RCP-200 panels, integrated with router control systems and panels, iControl and third-party control systems
Scalable for the largest systems	• Virtually limitless multiviewer system expansion with upstream NVISION router • A combined multiviewer/router system may include up to 1152 video inputs, and 72 UHD multiviewer outputs
Advanced probing and alarming	• Closed captioning and teletext subtitling display and alarming to ensure compliance with regulation, includes XDS and AFD • Software licensable Dolby E metadata extraction for metering and content alarming • On-screen alarm displays for operator alerts, supporting multicolor and blinking statuses based on severity, latching and status

Cards

The table below indicates how the cards are distributed in the Kaleido-MX 4K (3RU) housing frame:

Slot	Card	Card model	Applies to...
1	GPI I/O 1	GPI-1501	All 3RU configurations
2	GPI I/O 2	GPI-1501	All 3RU configurations (optional)
4	Input D	KMX-3901-IN-16-Q	64 × 1
7	Input C	KMX-3901-IN-16-Q	48 × 1, 64 × 1
9	Reference	VDA-1002	All 3RU configurations
10	URS	REF-1801	All 3RU configurations (optional)
12	Input B	KMX-3901-IN-16-Q	All 3RU configurations
15	Input A	KMX-3901-IN-16-Q	All 3RU configurations
17	Output B	KMX-3901-OUT-D	All 3RU configurations
19	Output A	KMX-3901-OUT-D	All 3RU configurations

Available Options

- Second power supply for redundant power security
- Second GPI-1501 GPI I/O module
- REF-1801 HD/SD frame reference module

Frame Interface

Front of the Kaleido-MX 4K (3RU) frame

When the frame door is opened, the front of the Kaleido-MX 4K (3RU) unit is visually divided into three sections:

Left side	Card slots 1–10 are laid out vertically. Input cards require 3 slots. A GPI-1501 card occupies slot number 1, and a VDA-1002 card occupies slot 9. Slot number 2 is reserved for a second GPI-1501 card (optional), and slot number 10 is reserved for a REF-1801 card (optional).
Center	The *controller* card with its attached control panel occupies the unnumbered slot to the right of the PSU and fan assemblies.
Right side	Card slots 11–20 are laid out vertically. Input cards require 3 slots. Output cards require 2 slots.

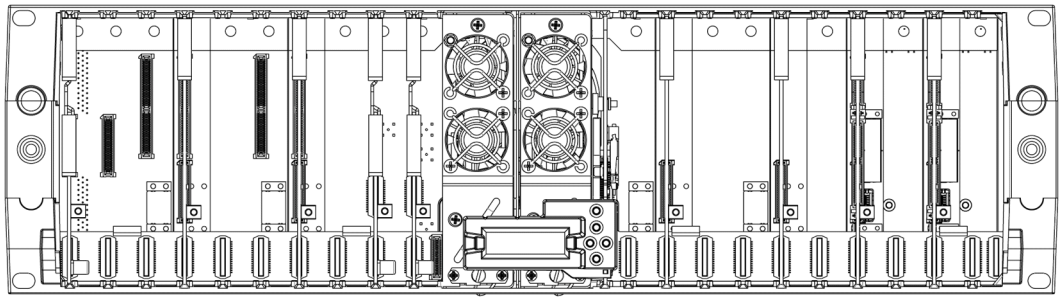

When the frame door is closed, the status LED on each of the cards in the frame is visible via a light pipe in the door. No other controls or indicators are present.

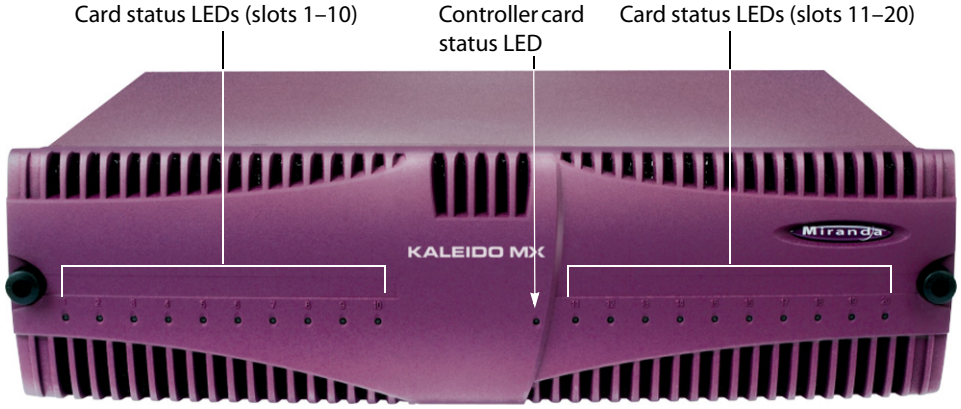

Rear of the Kaleido-MX 4K (3RU) frame

The rear of the Kaleido-MX 4K (3RU) frame is organized in three sections, matching the front.

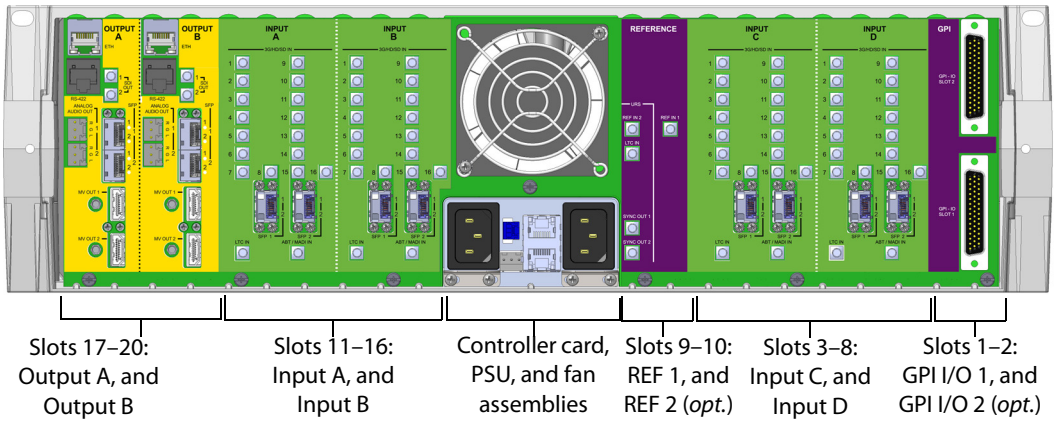

Viewed from the rear, the three sections are laid out as follows:

Right	Connectors associated with card slots 1–10 are distributed across color-coded areas: REFERENCE (mauve), INPUT C and INPUT D (green), and GPI (mauve).
Center	The *controller* card rear connectors are located between the power sockets, below the fan assembly.
Left	Connectors associated with card slots 11–20 are distributed across color-coded areas: OUTPUT A and OUTPUT B (yellow), INPUT A and INPUT B (green).

Note: The Kaleido-MX 4K (3RU) offers a wide variety of ports for incoming and outgoing signals. With a view towards future expansion, there are ports whose connections exist but that are currently not fully supported. The **SFP** ports are not yet supported.

The number of supported connectors varies, depending on the Kaleido-MX 4K (3RU) model. The following table lists the supported number of each connector type, for every Kaleido-MX 4K (3RU) model.

Number of connectors supported by Kaleido-MX 4K (3RU) model

Connectors	32 × 1	48 × 1	64 × 1
3G/HD/SD inputs	32	48	64
SDI outputs	4	4	4
HDMI outputs	*Not supported for seamless 4K UHD monitoring.*		
Analog audio outputs	4	4	4
ABT/MADI audio inputs	2	3	4
LTC inputs	3	4	5
Reference inputs	2	2	2
Ethernet connector	3	3	3
RS-422 connector	2	2	2

Number of connectors supported by Kaleido-MX 4K (3RU) model

Connectors	32 × 1	48 × 1	64 × 1
GPI inputs	40	40	40
Configurable GPI input/output	16	16	16

The diagrams below show the supported connector areas, for every Kaleido-MX 4K (3RU) model.

Kaleido-MX 4K (3RU) 32 × 1

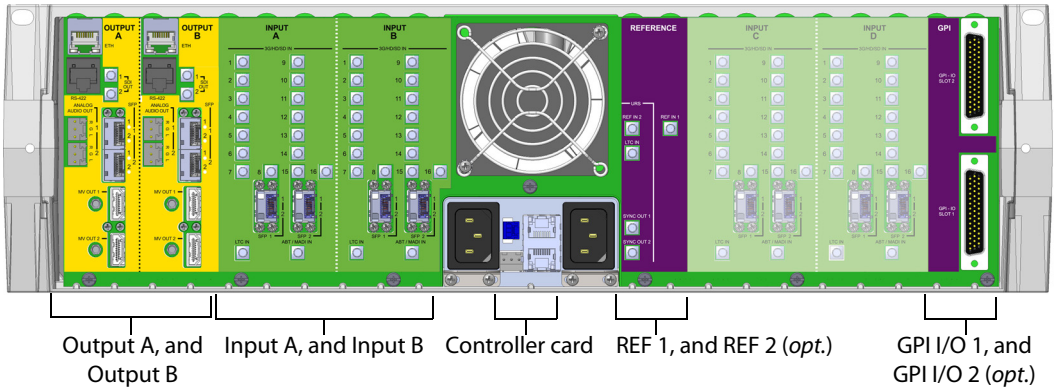

Kaleido-MX 4K (3RU) 48 × 1

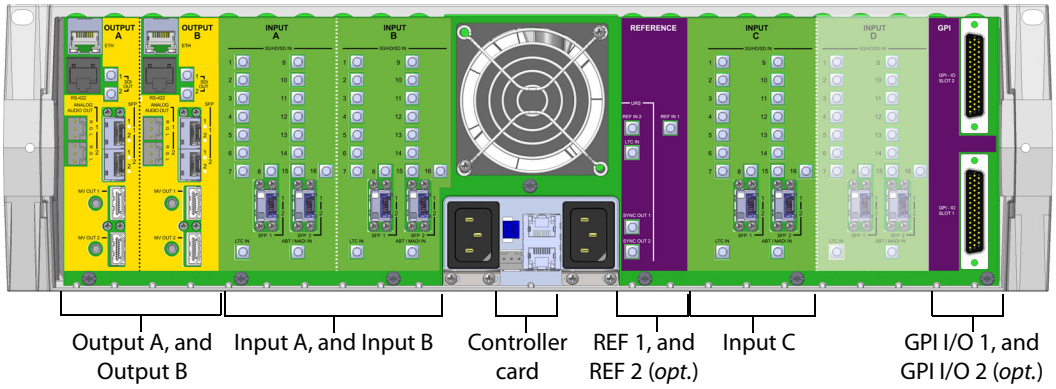

Kaleido-MX 4K (3RU) 64 × 1

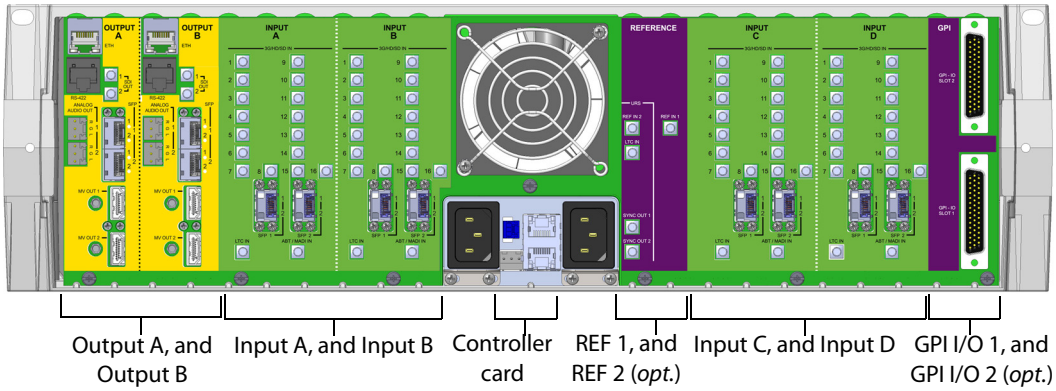

Mechanical Installation

Unpacking

Make sure the following items have been shipped with your Kaleido-MX 4K (3RU). If any of these are missing, contact your distributor or Grass Valley (see Contact Us, on page 37).

- Kaleido-MX 4K (3RU) unit with pre-installed cards (2–4 input cards, 2 output cards, a Densité CPU-ETH2 controller card, a VDA-1002 analogue video distribution amplifier module, 1 or 2 GPI-1501 GPI I/O modules), and 1 or 2 power supplies

  Notes

  - A REF-1801 HD/SD frame reference module, the second power supply, and a second GPI-1501 module are optional. See Cards on page 2, to review the card distribution of your Kaleido-MX 4K (3RU) housing frame.
  - Removing more than one input card at a time from a Kaleido-MX 4K system in operation is not supported.

- Two AC power cords
- Two cable retainers
- One quad link SDI to HDMI 2.0 converter
- Five WECO mating connector: two for each output card, for the analog audio monitoring outputs, plus one for the CPU-ETH2 controller card's GPI output.
- Four serial port adapters (two with straight cabling and two with crossover cabling — see RS-422 connection diagram, on page 10):

Part number	Adapter cabling	RS-422 pinout at the DE-9P connector
1737-3000-102	Straight	Controller (SMPTE master) mode
1792-3700-100	Crossover	Tributary (SMPTE slave) mode

- The Kaleido-MX 4K (3RU) Quick Start Guide

- DVD including the Release Notes for the current version of the Kaleido-X software, the Kaleido-X User's Manual, database samples, Quick Start guides and hardware reference manuals for all multiviewer models

Note: In line with our commitment to environmental preservation, only the Quick Start Guide for your multiviewer model, and some ancillary documents (e.g. welcome letters, warranty cards) are distributed in printed form. All manuals and the Release Notes are available on the DVD that shipped with your multiviewer. See the *Documentation* section of the Release Notes for a complete list. You can obtain the latest version of the manuals, the Release Notes, as well as software and useful data, from the Documentation Library section of Grass Valley's website.

Handling the Front Door

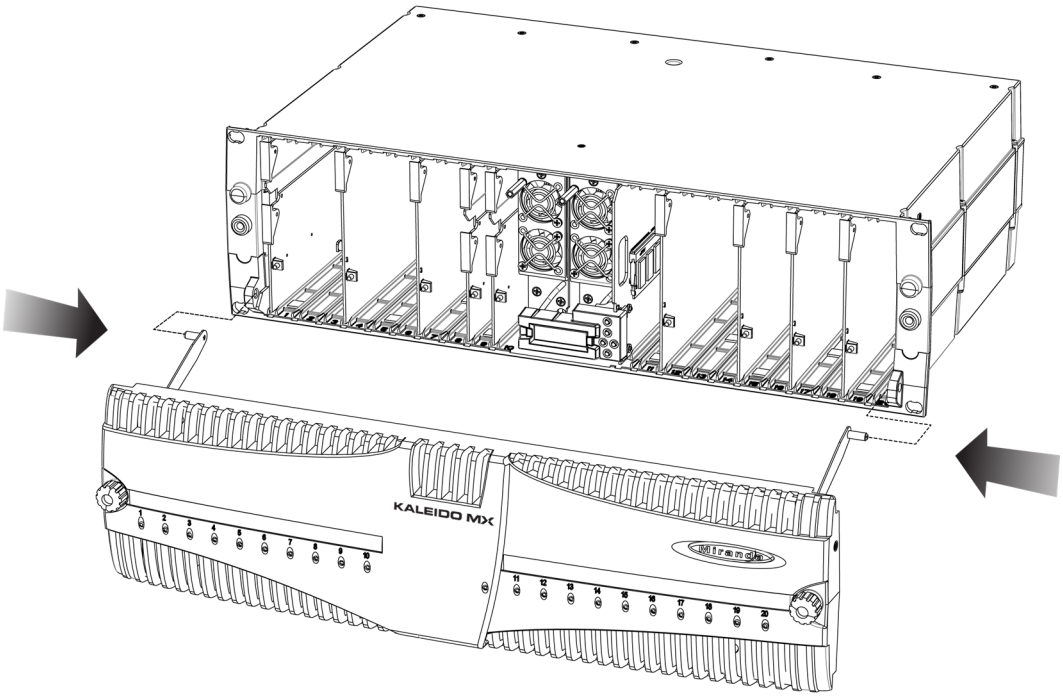

The front door of the Kaleido-MX 4K (3RU) frame is fastened in place by two captive thumbscrews, one at each end of the door.

Opening the front door

To open the door

- Turn both thumbscrews counterclockwise until they release, and then pull the door away from the front of the frame.

  The door is attached to the frame by guides that slide out of the frame as the door is pulled, and allow the door to be lowered below the frame so that cards and power supplies can be removed and installed.

Removing the front door

To remove the door

- Slip the ends of the guides off the posts on the door assembly.

> Note: You must tilt the door on an angle so the guides can move freely. There are no electrical connections to the door.

Closing the front door

To close the door

- Slide it into position against the front of the frame, and then turn the captive thumbscrews clockwise until the door is securely fastened into place.

Mounting the Kaleido-MX 4K (3RU) in a Rack

The Kaleido-MX 4K (3RU) housing frame occupies 3RU, in a standard 19-inch rack.

To mount the frame

1. Open the front door to expose the rack mounting flanges at the ends of the chassis (see Opening the front door, on page 7).
2. Install the frame in the rack using 4 standard rack-mounting screws (not supplied) through the four holes in the mounting flanges.

Ventilation

In a Kaleido-MX 4K (3RU), ventilation for the frame is provided by a fan mounted in the center of the rear panel. The fans draw air through the frame and exhaust it to the rear. Ventilation slots in the front panel allow air to flow into the frame, and an air filter is mounted in the frame door.

> IMPORTANT
> To ensure proper cooling, the front panel of the Kaleido-MX 4K frame must be closed at all times when cards are installed and operating.

The frame-mounted fans are supplemented by thermostatically-controlled fans mounted in each power supply. They are not field-serviceable.

Ensure that the front panel ventilation slots are not obstructed. Check the air filter regularly to ensure that it is not plugged up with debris. The filter may be cleaned by rinsing in warm water. Dry thoroughly before replacing it in the frame. See Replacing the Air Filter on page 16, for details.

Signalling

This section describes the connectors found on the Kaleido-MX 4K (3RU) models' rear panel. For information on setting up your system for initial deployment, please consult the *Kaleido-MX 4K (3RU) Quick Start Guide* that shipped with your system.

Output Modules

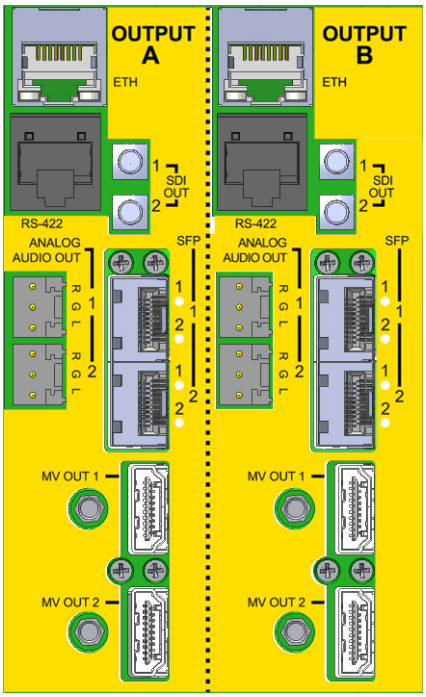

The following table lists the function of each connector associated with the output heads, on Output A, and Output B.

Connector label	Connector type	Function
Output A, SDI OUT 1	DIN 1.0/2.3	Serial digital HD output signal from Output A, Head 1. **Top-left quadrant** of quad link (square division) 4K UHD output (with embedded audio).
Output A, SDI OUT 2	DIN 1.0/2.3	Serial digital HD output signal from Output A, Head 2. **Bottom-left quadrant** of quad link (square division) 4K UHD output (with embedded audio).
Output B, SDI OUT 1	DIN 1.0/2.3	Serial digital HD output signal from Output B, Head 1. **Top-right quadrant** of quad link (square division) 4K UHD output (with embedded audio).
Output B, SDI OUT 2	DIN 1.0/2.3	Serial digital HD output signal from Output B, Head 2. **Bottom-right quadrant** of quad link (square division) 4K UHD output (with embedded audio).
Output A, ANALOG OUT 1 L, 1 R, 2 L, 2 R; Output B, ANALOG OUT 1 L, 1 R, 2 L, 2 R	WECO	Analog audio outputs (left, right channels) to feed the audio monitoring system.

Connector label	Connector type	Function
Output A, MV OUT 1, and MV OUT 2; Output B, MV OUT 1, and MV OUT 2	HDMI	*Not supported for 4K UHD monitoring.* A seamless 4K UHD output is only supported at the SDI OUT connectors. The quad-link SDI to HDMI converter that ships with each multiviewer provides one progressive scan HDMI 2.0 output.
Output A, SFP 1 1, SFP 1 2, SFP 2 1, and SFP 2 2; Output B, SFP 1 1, SFP 1 2, SFP 2 1, and SFP 2 2	—	Optional ports. *Not yet supported.*

System Control

The following table lists the purpose of each connector associated with system control, on Output A, and Output B.

Connector label	Connector type	Function
ETH	RJ-45	100 Base-T Ethernet connection
RS-422	RJ-45[a]	Connect to an RS-422 (SMPTE ST 207, EBU-3245) or RS-485 device or network

a. The Kaleido-MX 4K multiviewers' RS-422 ports have an RJ-45 connector in order to preserve space on a busy panel. The RS-422 interface specifies a DE-9 connector, so if you are using this interface, you will require a DE-9-to-RJ-45 adapter. Grass Valley supplies two adapter models, correctly wired for this application: a straight adapter (part no. 1737-3000-102), and a crossover adapter (part no. 1792-3700-100).

RS-422 connection diagram

The pinout for the RS-422 signals on the RJ-45 connectors, and the wiring diagrams for the appropriate adapters, are shown here:

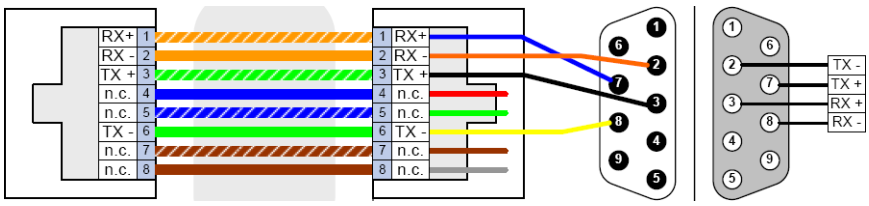

Pinout of an RS-422 port's RJ-45 connector on the multiviewer

RJ-45
Pinout of **straight** adapter (Grass Valley part no. 1737-3000-102)

DE-9 male
DE-9 female
Pinout of RS-422 connector on SMPTE **slave** device

Standard wiring between multiviewer and devices wired to SMPTE "slave" specification (e.g. most routers, Ross Synergy switchers, Nevion ETH-CON)

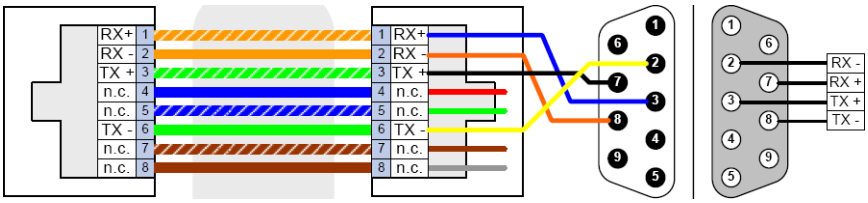

Pinout of an RS-422 port's RJ-45 connector on the multiviewer

RJ-45
Pinout of **crossover** adapter (Grass Valley part no. 1792-3700-100)

DE-9 male
Pinout of RS-422 connector on SMPTE **master** device

DE-9 female

Standard wiring between multiviewer and devices wired to SMPTE "master" specification (e.g. Philips Jupiter router control system, Grass Valley Presmaster PCS)

> Note: The multiviewer's RS-422 ports have no ground pin. Using the appropriate DE-9S-to-RJ-45 adapter, an external device should be able to communicate with a multiviewer despite the lack of a ground.

For more information about the serial ports' specifications, see Serial ports (2), on page 35. For more information about the RS-422 serial connections, see the "Serial Connections" section in the *Routers* chapter of the Kaleido-X User's Manual.

KMX-3901-OUT front card-edge USB connector

Every output module also has one USB connector, into which you may connect a mouse, keyboard, or USB flash memory for a software upgrade or data backup. The diagram below shows the USB connector, between various LED indicators and the Select button, on the output cards' front edge. See Kaleido-MX 4K Output Card Interface on page 20, for a detailed description of the LED indicators, and Using the Densité Frame Control Panel, on page 22, for more information on the Select button.

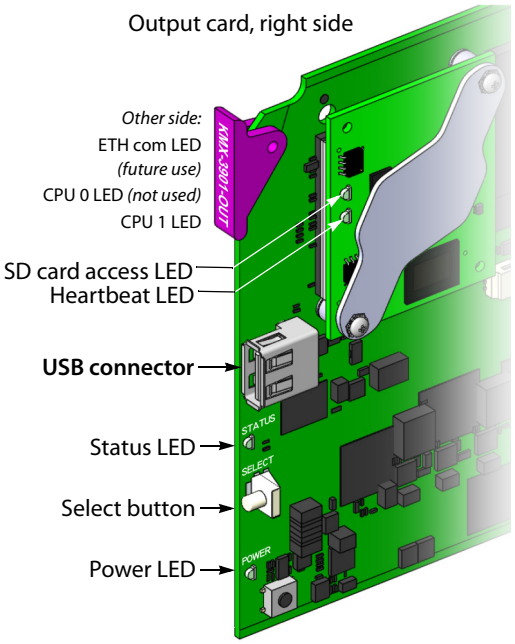

Input Modules

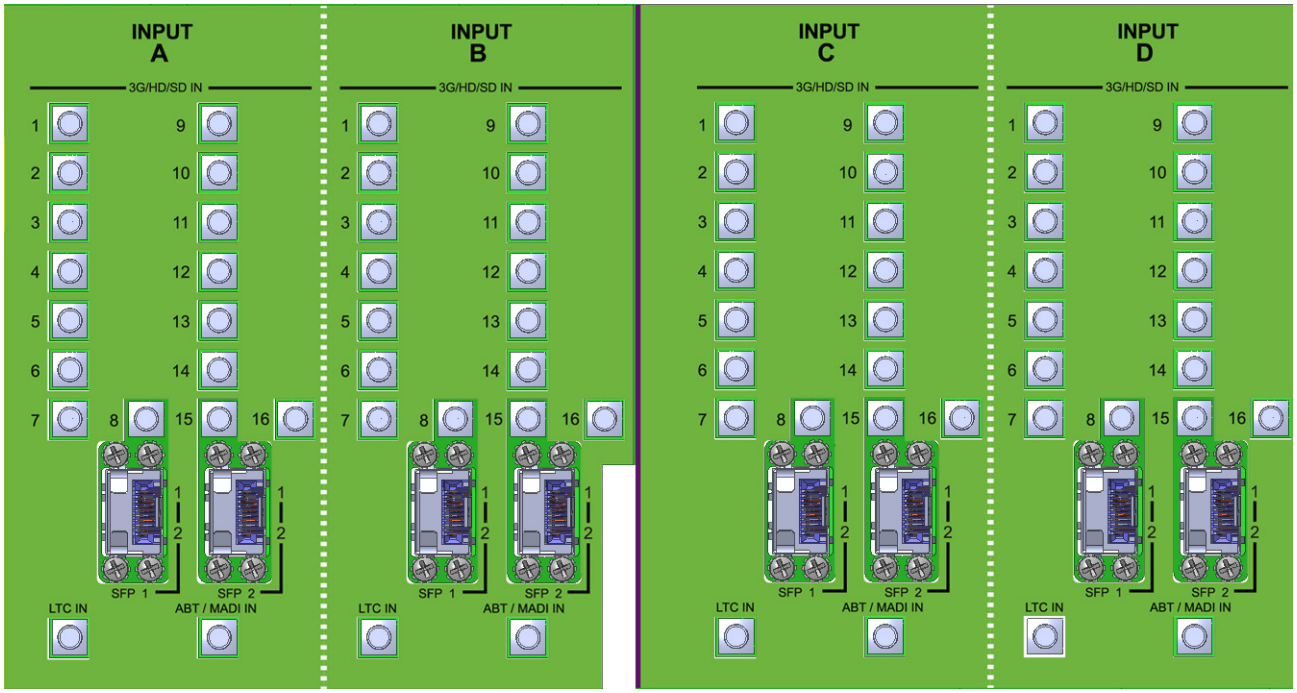

The following table lists the function of each connector associated with the input modules.

Connector label	Connector type	Function
3G/HD/SD IN 1 to 3G/HD/SD IN 16	DIN 1.0/2.3	SD-SDI, HD-SDI, or 3G-SDI video inputs
ABT/MADI IN	DIN 1.0/2.3	Multiplexed audio from an external device (Audio Bridge Terminal)
LTC IN	DIN 1.0/2.3	Time code input
SFP 1 1, SFP 1 2, SFP 2 1, and SFP 2 2	—	Optional ports. *Not yet supported.*

Reference Modules

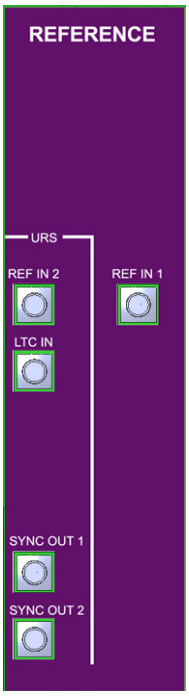

The REFERENCE area of the Kaleido-MX 4K (3RU) rear panel exposes one connector associated with the VDA-1002 card (slot 9), and four connectors associated with an optional REF-1801 card (slot 10, if present).

Connector label	Connector type	Function
REF IN 1	DIN 1.0/2.3	Reference signal to be distributed to all input cards in the frame.
REF IN 2	DIN 1.0/2.3	Reference signal for redundancy.
LTC IN	DIN 1.0/2.3	Time code input. To use this LTC input, you must first configure the REF-1801 card's time code source and processing options. Refer to the *REF-1801 Guide to Installation and Operation* (available on the Kaleido-X DVD that shipped with your system, and from the Documentation Library section of Grass Valley's website), for more information.
SYNC OUT 1, SYNC OUT 2	DIN 1.0/2.3	Programmable sync outputs. Require the REF-1801 card's *SPG* option (refer to the *REF-1801 Guide to Installation and Operation).*

GPI I/O Modules

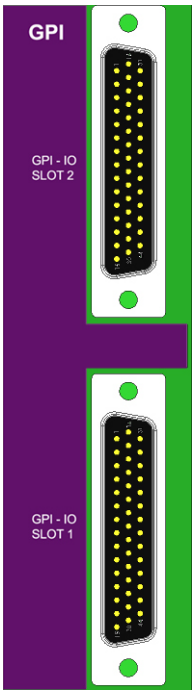

A GPI-1501 module supports 20 GPI inputs, and 8 configurable GPI input/output terminals. The pinout of the associated DB-44 connectors (labelled GPI-I/O SLOT 1, and GPI-I/O SLOT 2), is as follows:

Pin	Signal	Pin	Signal	Pin	Signal	Pin	Signal
1	GPIO-1 +	12	GPI-I 7	23	RS422-TX +	34	GPIO-5 –
2	GPIO-3 –	13	GPI-I 4	24	GPI-I 19	35	GND
3	GPIO-4 +	14	GPI-I 1	25	GPI-I 17	36	GPIO-7 +
4	GPIO-6 –	15	GND	26	GPI-I 13	37	RS422-RX –
5	GPIO-7 –	16	GPIO-1 –	27	GPI-I 11	38	GPI-I 20 / LTC
6	GPIO-8 +	17	GPIO-2 +	28	GPI-I 8	39	GPI-I 16
7	RS422-TX –	18	GPIO-4 –	29	GPI-I 5	40	GPI-I 14
8	GPI-I 18	19	GPIO-5 +	30	GPI-I 2	41	GND
9	GPI-I 15	20	GPIO-6 +	31	GND	42	GPI-I 9
10	GPI-I 12	21	GPIO-8 –	32	GPIO-2 –	43	GPI-I 6
11	GPI-I 10	22	RS422-RX +	33	GPIO-3 +	44	GPI-I 3

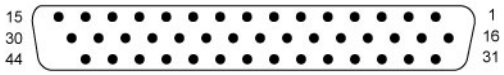

GPI-I/O connector

For ease of connection, you may use the GPI-1501-TBA terminal block adapter with integral 44-pin connector. Refer to the *GPI-1501 Guide to Installation and Operation* (available on the Kaleido-X DVD that shipped with your system, and from the Documentation Library section of Grass Valley's website), for more information. Refer to the *Kaleido-X User's Manual* for detailed instructions on configuring a GPI-1501 within your multiviewer system.

Maintenance

Replacing the CPU-ETH2 Controller Card

To replace the CPU-ETH2 controller card

1. Open the front door of the frame (see Opening the front door, on page 7).

   The controller card is located to the right of the power supply slots at the center of the frame.
2. Hook your finger through the opening at the top of the card.
3. Pull gently until the card is released from the rear connector, and then slide the card out of the frame.

   Note: Do not pull on the control panel to remove the card.
4. Slide the new card into the controller slot, and push gently on the card edge to engage the rear connectors.
5. Be sure to close the front door before operating the Kaleido-MX 4K, to ensure proper ventilation (see Closing the front door, on page 8).

Replacing Cards

All cards and rear panels can be installed with the frame power on. Each card has a connector which plugs into the frame's backplane for distribution of power and connection to the controller card, and one or two connectors (depending on the card type) that plug into the associated rear panel for inputs and outputs.

Removing a card

Note: Removing more than one input card from a Kaleido-MX 4K system in operation is not supported.

To remove a card

1. Open the front door of the frame (see Opening the front door, on page 7).
2. Tilt the swivel handle, on the front of the card you wish to remove, to lever the connectors apart, and then use the handle to pull the card straight out of the slot.
3. Close the front door of the frame (see Closing the front door, on page 8).

Installing a card

To install a card

1 Open the front door of the frame (see Opening the front door, on page 7).

2 To install a card into an empty slot, slide the card into the slot, and push gently on the handle to seat the connectors.

Seating input cards requires more pressure. Inserting the card into the wrong slot will not damage the card, and will be flagged by the on-card status LED flashing, to indicate that there is no connection to the rear panel.

3 Close the front door of the frame (see Closing the front door, on page 8).

Replacing Power Supply Modules

The Kaleido-MX 4K frames support dual redundant hot-swappable power supplies. The basic configuration includes a single supply, with an empty slot for the optional redundant power supply. Installing a second power supply module and applying power to it automatically engages the redundant supply mode. Each power supply has its own power socket on the rear panel, and should be connected to the AC supply using the power cords that shipped with your hardware, or other approved cords.

Notes

- A single power supply can be installed in either of the two slots.
- Power integrity is enhanced if the two power supplies are plugged into different circuits.

To install or change a power supply module in a Kaleido-MX 4K (3RU)

1 Open the front door of the frame (see Opening the front door, on page 7).

2 Remove the controller card, to provide access to the power supply slots (see Replacing the CPU-ETH2 Controller Card, on page 14).

3 Release the retaining spring by turning the captive screw mounted on the lower front panel of the power supply counterclockwise.

4 Remove the power supply module by pulling on the handle on its front panel and sliding it out of the frame.

5 Slide the new power supply module into the slot, and push it gently into position to seat the connectors.

6 Secure the supply in position by turning the captive screw mounted on the lower front of the power supply clockwise.

This engages a retaining spring which holds the supply securely in place.

7 Replace the controller card.

8 Close the front door of the frame (see Closing the front door, on page 8).

Replacing Frame Ventilation Fans

The main cooling fan on the rear of Kaleido-MX 4K (3RU) frames may be replaced in case of failure. Replacement fans are Grass Valley part number 1971-2700-200.

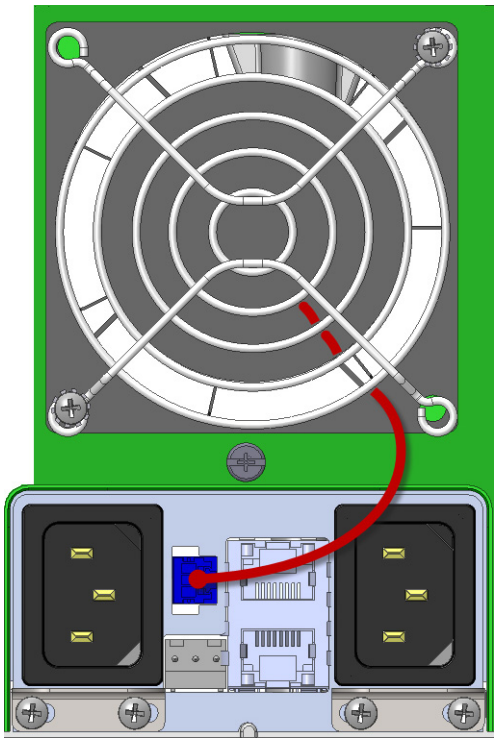

To replace the frame ventilation fan in a Kaleido-MX 4K (3RU)

1. Grasp the fan unit's power connector, and pull it straight out of its power outlet located below the fan assembly, to the right of the left-hand power socket.
2. Remove the two screws that secure the grill and fan unit to the frame.

   Retain the screws and grill, as they will be used with the replacement fan.
3. Pull the unit away from the frame.
4. Locate the arrow on the side of your new fan unit, and position the unit with the arrow pointing away from the frame, and with the power feed hanging from the bottom right corner of the unit.
5. Use the two screws you retained from the old fan, to install the new fan and grill.
6. Grasp the power connector, and push it onto the power outlet.

Replacing the Air Filter

You may remove the air filter for cleaning or replacement.

To replace the air filter

1. Open the front panel of the frame (see Opening the front door, on page 7).
2. Remove the two screws that secure the metal retainer bar inside the door, and set the screws and bar aside.
3. Grasp the top of the filter installed on the rear of the door, and pull it gently out of its mounting slot.
4. Slide the filter into the slot at the bottom of the front panel door, and ensure that the filter is not bunched or folded.
5. Install the metal retainer bar and its two screws.
6. Close the front panel of the frame (see Closing the front door, on page 8).

2 Operation

The Kaleido-MX 4K can be controlled in different ways:

- In the housing frame, you can monitor card operating status of your Kaleido-MX 4K input and output cards by looking at the card-edge LEDs (see Card Button and LED Interface, on page 18), and use the Densité CPU-ETH2 local control panel and its buttons to navigate menus and adjust parameter values (see Using the Densité Frame Control Panel, on page 22).
- The loading and management of layouts is handled via a client application, XEdit, accessed through a dedicated Ethernet port (refer to the Kaleido-X User's Manual).
- Grass Valley's iControl system can be used to access the card's operating parameters from a remote computer, using a convenient graphical user interface (see Remote Control Using iControl, on page 24).
- A GPI interface allows remote layout selection.
- The RCP-200 advanced remote control panel, and the Kaleido-RCP2 control panel allow you to perform operations on the monitor wall, either by themselves or in association with an external keyboard and a mouse. Refer to the RCP-200, Kaleido-RCP2, and Kaleido-X documentation (available on the Kaleido-X DVD that shipped with your system).

Card Button and LED Interface

Kaleido-MX 4K Input Card Interface

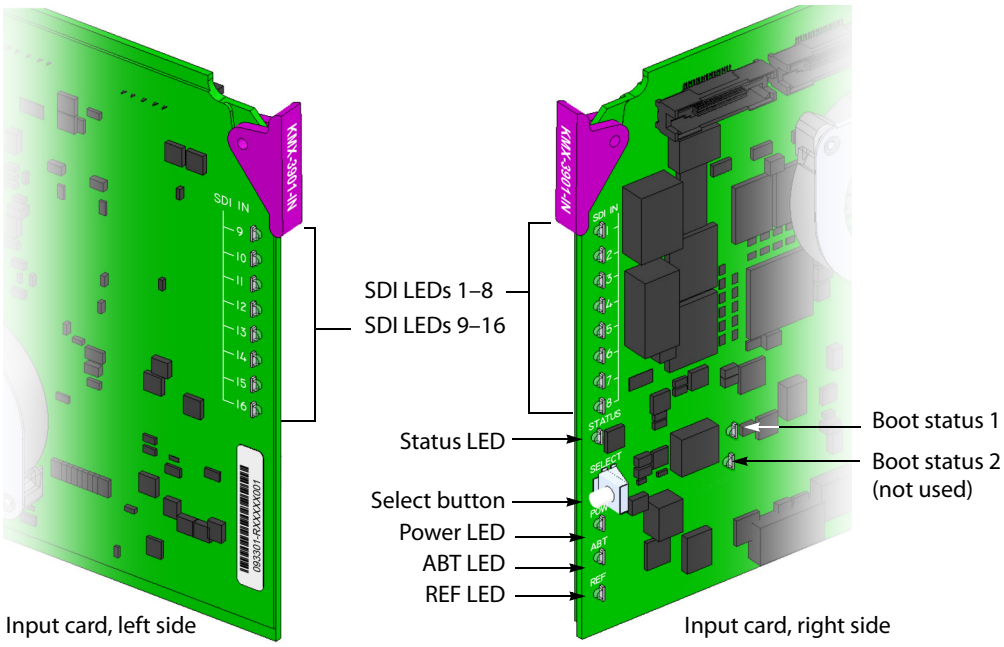

Summary view of the interface on the left, and right sides of a Kaleido-MX 4K input card

Input card Status LED

The Status LED is located on the front edge of a Kaleido-MX 4K card, immediately above the Select button, and is visible through the front access door of the Densité frame. This multi-color LED indicates the status of the card, by color, and by blinking/steady illumination:

LED	Meaning
Green	Normal (communication established with an output card)
Blinking orange	Booting (or the card is selected for local control)
Red	Default color before firmware initialization is complete / update in progress (may last more than 10 minutes)
Blinking red	Fan failure / no rear

The Status LED always shows the most severe detected error status. In the table above, error severity increases from top to bottom, with green representing no error/disabled, and blinking red the most severe error conditions.

If the Status LED is blinking orange, it means that the card is selected for local control using the Densité frame's control panel (or that the card is booting up). See Using the Densité Frame Control Panel, on page 22 for details.

If the Status LED is steady red (not blinking), use the Densité frame control panel to review card status information (see Local Control Panel Menu Structure, on page 23). If the card

status menu reports that an update is in progress, then you know that you should not interrupt this process (by reseating the card, for example).

Input card power LED

Monitors the status of the 1.8V and 3.3V power supplies on board the Kaleido-MX 4K input card.

LED	Meaning
Green	OK
OFF	Failure of the 1.8V or 3.3V on-board PSUs

SDI LEDs

This group of LEDs monitors the status of the 16 inputs on the Kaleido-MX 4K input cards. The frame door must be open for the LEDs to be visible.

LED	Meaning
Green	SD-SDI, HD-SDI or 3G input signal detected
Red	No input signal detected

ABT/MADI LED

This LED monitors the status of the ABT/MADI input on the Kaleido-MX 4K input cards.

LED	Meaning
Green	ABT/MADI signal detected
Red	No signal detected

REF LED

This LED monitors the status of the REF input on the Kaleido-MX 4K input cards.

LED	Meaning
Green	Black-burst or tri-level-sync signal detected
Red	No signal detected

Boot status LED 1

Monitors the status of the firmware.

LED	Meaning
Green	Normal (firmware has completed initialization and communication was established with at least one output card)
Blinking orange	Error or no communication with an output card
Blinking green/red	Transitory state during firmware initialization
Red	Initial state

Boot status LED 2

This LED is always red, and currently not relevant.

Kaleido-MX 4K Output Card Interface

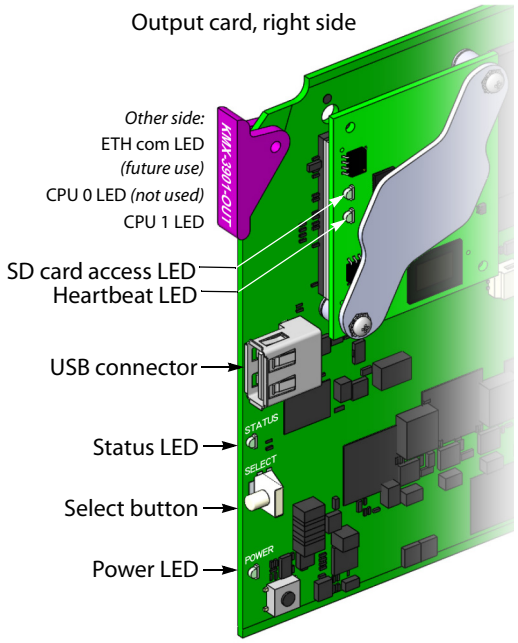

Summary view of the interface on a Kaleido-MX 4K output card edge

Output card Status LED

The Status LED is located on the front edge of a Kaleido-MX 4K card, immediately above the Select button, and is visible through the front access door of the Densité frame. This multi-color LED indicates the status of the card, by color, and by blinking/steady illumination:

LED	Meaning
Green	Normal
Blinking orange	Booting (or the card is selected for local control)
Red	Firmware initialization in progress / no Ethernet / SD card error / CPU kernel error / update in progress (may last up to 10 minutes)
Blinking red	Fan failure / no rear / duplicate IP address

The Status LED always shows the most severe detected error status. In the table above, error severity increases from top to bottom, with green representing no error/disabled, and blinking red the most severe error conditions.

If the Status LED is blinking orange, it means that the card is selected for local control using the Densité frame's control panel (or that the card is booting up). See Using the Densité Frame Control Panel, on page 22 for details.

If the Status LED is steady red (not blinking), use the Densité frame control panel to review card status information (see Local Control Panel Menu Structure, on page 23). If the card status menu reports that an update is in progress, then you know that you should not interrupt this process (by reseating the card, for example).

Output card power LED

Monitors the status of the power supplies on board the Kaleido-MX 4K output card.

LED	Meaning
Green	OK
OFF	Failure of an on-board PSU, or there was a glitch on the 3.3V PSU (in which case reseating the card may resolve the problem). In the first case, reseating the card will not resolve the problem.

Output card heartbeat LED

Monitors the status of the system firmware.

LED	Meaning
Blinking red	System OK (*heartbeat* signal)

Memory card access LED

Monitors read/write operations to the SD memory card.

LED	Meaning
OFF	No read/write operations in progress
Blinking green	Read of write operation in progress

ETH communication LED

This LED is always OFF, and currently not relevant.

CPU 0 LED (not used)

This LED is always orange, and currently not relevant.

CPU 1 LED

Monitors the status of the firmware during the startup process.

LED	Meaning
Green	Normal (the Kaleido-X software, XEdit, XAdmin are available)
Blinking orange	Firmware initialization completed (waiting for the Kaleido-X software to start)
Orange	Transitory state during firmware initialization
Red	Initial state

Output module SFP LEDs

In a Kaleido-MX 4K (3RU), every output module has 4 SFP LEDs located on the rear connector panel. These LEDs are always OFF, and currently not relevant.

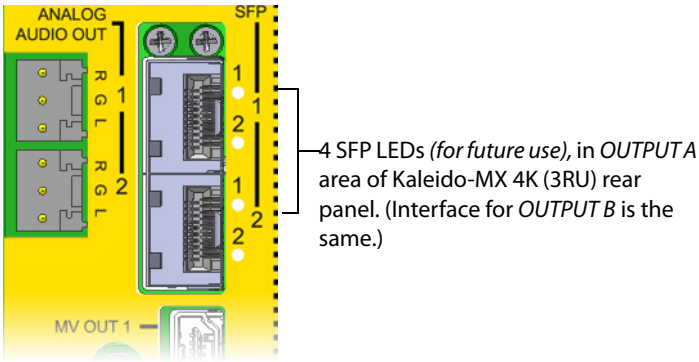

Using the Densité Frame Control Panel

All of the cards installed in a Densité frame are connected to the frame's controller card, which handles all interaction between the cards and the outside world. There are no operating controls located on the cards themselves. The controller supports remote operation via its Ethernet ports, and local operation using its integrated control panel.

The local control panel is fastened to the controller card, and consists of a display unit capable of displaying two lines of text, each 16 characters in length, and five buttons.

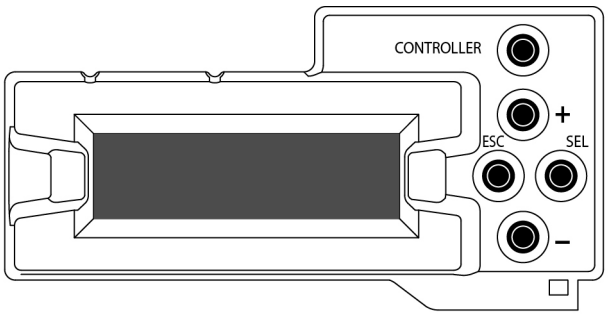

Densité CPU-ETH2 local control panel

The panel is assigned to operate any card in the frame by pressing the Select button *on the front edge of that card.* The Status LED on the selected card will then be blinking orange.

Press the CONTROLLER button on the control panel to select the controller card itself.

Navigating the Local Control Panel Menu

The Kaleido-MX 4K has operating parameters which may be adjusted locally at the controller card interface. Press the Select button *on the front edge of a Kaleido-MX 4K input or output card* (see Card Button and LED Interface, on page 18) to assign the local control panel to operate the card. The local control panel displays a menu that can be navigated

using the four buttons located next to the display. The functionality of the buttons is as follows:

[+] and [-]	Used for menu navigation and value modification.
SEL	Gives access to the next menu level. When a parameter value is shown, pressing this button once enables modification of the value using the [+] and [-] buttons; pressing a second time confirms the new value.
ESC	Cancels the effect of parameter value changes that have not been confirmed; pressing ESC causes the parameter to revert to its former value. Pressing ESC moves the user back up to the previous menu level. At the main menu, ESC does not exit the menu system. To exit, press the Select button on the front edge of the card being controlled.

If no controls are operated for 30 seconds, the controller reverts to its normal standby status, and the selected card's Status LED reverts to its normal operating mode. If a parameter was changed on the card but not submitted (SEL was not pressed) and the 30 second timeout occurs, the parameters will be confirmed as if the SEL button had been pressed.

Local Control Panel Menu Structure

Where applicable, default values are underlined.

Kaleido-MX 4K output card local menu

STATUS	{CARD STATUS}**	
{CARD VERSION}**		
RESOLUTION	HEAD1	{List of resolutions;* = current}**
	HEAD2	{List of resolutions;* = current}**
{LINK STATE}**		
FANS	{CPU FAN STATUS}**	
	{FPGA FAN STATUS}**	
NETWORK SETTINGS	FRAME IP ADDRESS EDIT	###.###.###.###
	NETMASK EDIT	###.###.###.###
	DEFAULT GW EDIT	###.###.###.###
	LINK MODE EDIT	<u>Auto-negotiate</u>
		100Mbps half-duplex
		100Mbps full-duplex
	OUTPUT A IP EDIT	###.###.###.###
	OUTPUT B IP EDIT	###.###.###.###
	{POSITION}**	
	{MAC ADDRESS}**	

* All output cards within a Kaleido-MX 4K frame must have their output heads configured with the same refresh rate. If your frame is referenced, then the heads' refresh rate must also match the reference signal's refresh rate.

** Parameters shown here in braces { } will display the actual value of the item and not the text shown above.

Kaleido-MX 4K input card local menu

STATUS	CARD STATUS	{CARD STATUS}**	
	INPUT STATUS	1 {FORMAT}**	
		2 {FORMAT}**	
		3 {FORMAT}**	
		⋮	
		16 {FORMAT}**	
CONFIG***	4K UHD PRESCALER	ENABLE	
		DISABLE	
	SFP CONFIG	SFP OUT 1	ON
			OFF
		SFP OUT 2	ON
			OFF
		SFP OUT 3	ON
			OFF
		SFP OUT 4	ON
			OFF

{CARD VERSION}**

** Parameters shown here in braces { } will display the actual value of the item and not the text shown above.
*** The Kaleido-MX 4K does not support converting an input module into a 4K UHD prescaler. The SFP ports are not yet supported.

Remote Control Using iControl

The Kaleido-MX 4K may be controlled by using Grass Valley's iControl version 4.43 or later. This section describes the two control panels associated with the Kaleido-MX 4K's input and output cards and their use. Refer to the iControl User's Guide for information about setting up and operating iControl.

In iControl Navigator, iControl Web, or iControl Solo, double-click the icon for a Kaleido-MX 4K input or output card (KMX-3901-OUT, or KMX-3901-IN-16-Q) to open the associated control panel.

Kaleido-MX 4K Service Control Panels in iControl

The card label (*KMX-IN-16-Q,* and *KMX-3901-OUT* in the examples below) and the slot number where the card is installed in the Densité frame are indicated in the window's title bar.

The service control panel for Kaleido-MX 4K input cards only offers information.

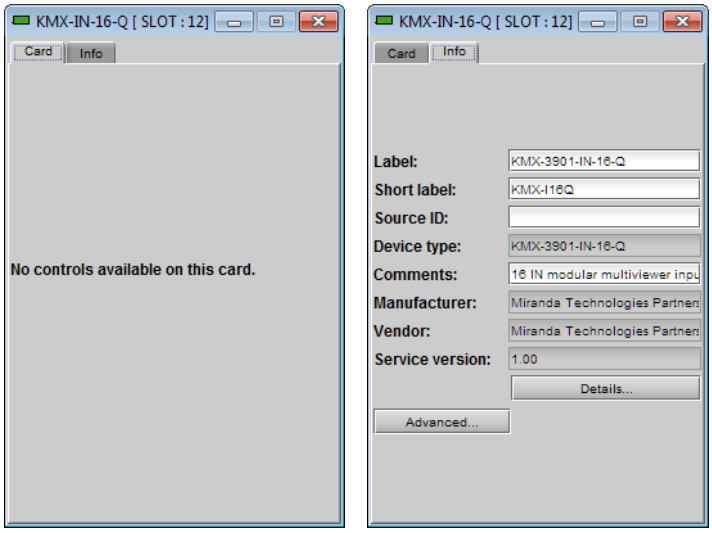

Service control panel for a Kaleido-MX 4K input card

See Info Panel on page 27 for more information.

In the **KMX-3901-OUT** control panel window, there are three main areas: the status icon area, the navigation area, and the operating control area.

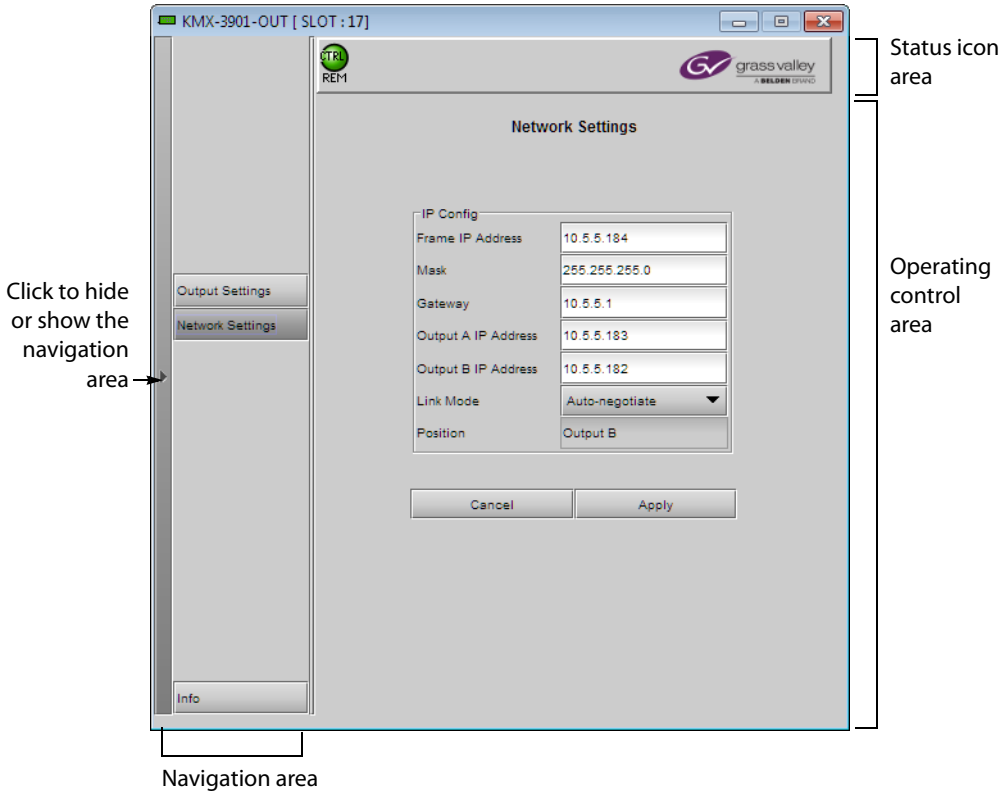

Service control panel for a Kaleido-MX 4K output card

The status icon area contains only one icon: the control status icon.

- A green control status icon indicates that the card is available for remote control from the service control panel in iControl.
- A yellow icon indicates that someone is controlling the card from the control panel on the housing frame (see Using the Densité Frame Control Panel, on page 22).

The navigation area contains buttons that control the contents of the main area.

- Click a button to access the associated features.
- Click the left side border (identified by a small arrow icon) to hide or reveal this area.

The operating control area contains the main operating controls for managing the Kaleido-MX 4K multiviewer's feature set. The contents change depending on the button you clicked in the navigation area. The three panels are described individually in the following sections:

- Output Settings Panel, on page 26
- Network Settings Panel, on page 27
- Info Panel, on page 27

Output Settings Panel

Set the resolution of the multiviewer output heads to 1080p50, or 1080p59.94, depending on your display's refresh rate. Each head corresponds to one quadrant of the quad link (square division) 4K UHD signal that feeds the display. The output cards must *not* be configured to use EDID (Extended Display Identification Data); make sure the check box is *not* selected). The value you select in the **Output resolution** list will be used.

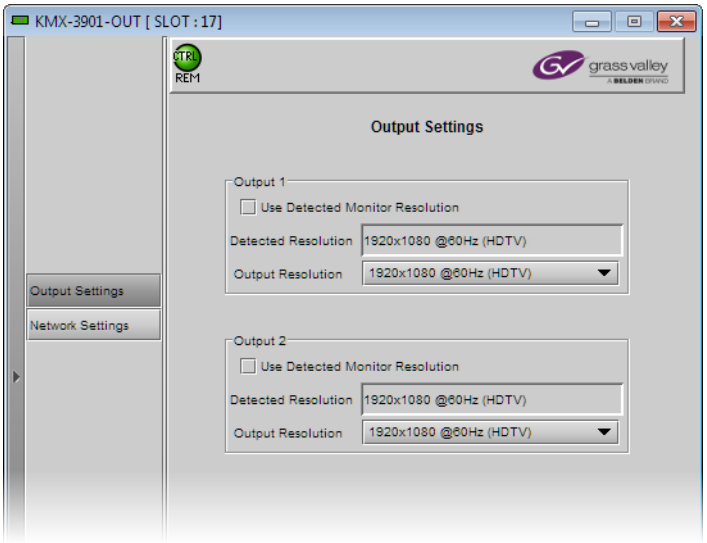

Note: All output cards within a Kaleido-MX 4K frame must have their output heads configured with the same refresh rate. If your frame is referenced, then the heads' refresh rate must also match the reference signal's refresh rate.

Network Settings Panel

Kaleido-MX 4K output cards are shipped with default network settings, which you must replace with values suitable for your network environment. You may need to consult your network administrator to get the correct values. Enter the appropriate IP address, mask and gateway information to configure a Kaleido-MX 4K output card within your Ethernet network.

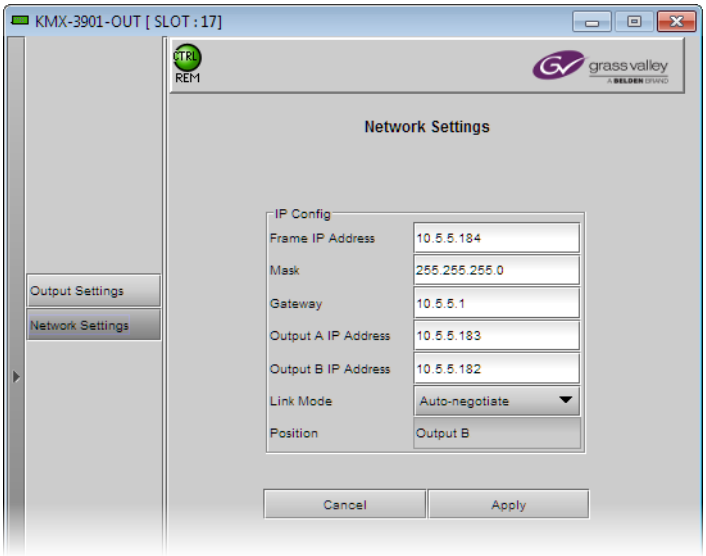

Click **Apply** to set these values into the card, or **Cancel** to leave the original values unchanged.

Notes

- These settings apply to the rear-panel Ethernet port of the Kaleido-MX 4K output cards; *not* to the Ethernet ports at the back of the Densité controller card.
- On all Kaleido multiviewers, the network adapters are set to auto-negotiate. By default, the connection speed and duplex mode will be set automatically based on the corresponding port settings on the switch.
- The position of the output card is not configurable; the information is presented here for information only.
- Kaleido-MX 4K (3RU) systems, which include two output cards, require three IP addresses: one for each output card, and a virtual IP address for the system. Refer to the *Kaleido-MX 4K (3RU) Quick Start Guide* for detailed setup information.

Info Panel

When a Kaleido-MX 4K input or output card is included in an iControl environment, certain information about the card may be made available to the iControl system. In the boxes with a white background, you can type labels and comments that will make this card easier to identify in a complex setup.

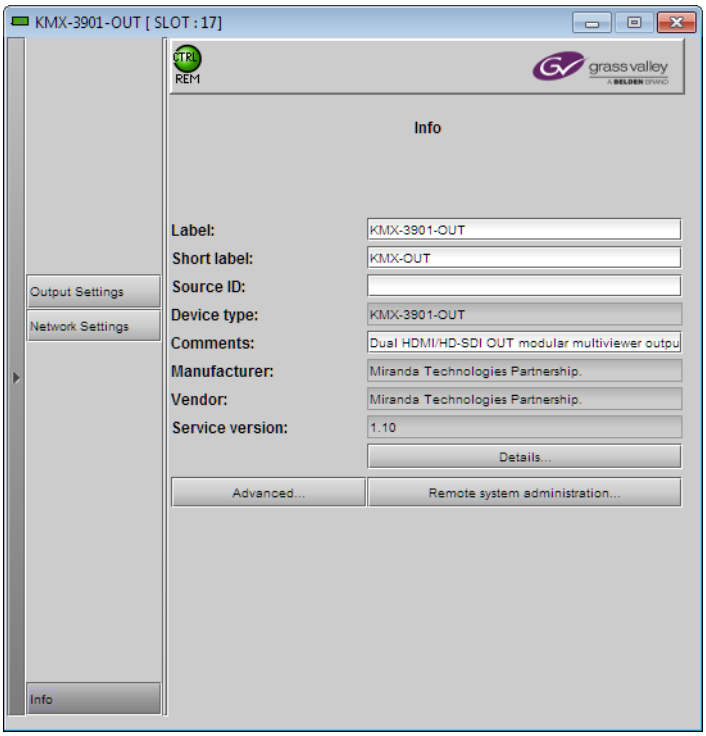

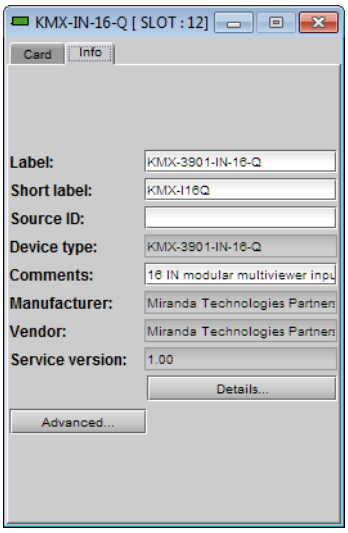

Label	Type a label to identify this Kaleido-MX 4K card when it appears in iControl applications. This label appears in the service panel's title bar, in iControl Solo, and in the iControl Navigator views
Short label	Type the shorter label that iControl uses in some cases (8 characters).
Source ID	Type a descriptive name for this Kaleido-MX 4K card.
Comments	Type any desired text.

The remaining boxes show manufacturing information about this card.

Three buttons give access to additional information and controls:

Details

Reports the firmware version, service version, and panel version for this card.

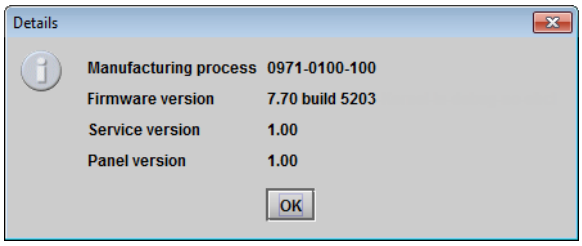

Output card Details window

Advanced

Shows the Long ID for this Kaleido-MX 4K card. The Long ID is the address of this card in the iControl network.

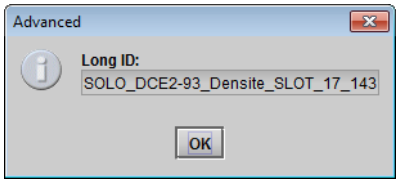

Remote system administration

Opens the **Joining Locators** window, which lists remote lookup services to which this Kaleido-MX 4K card is registered.

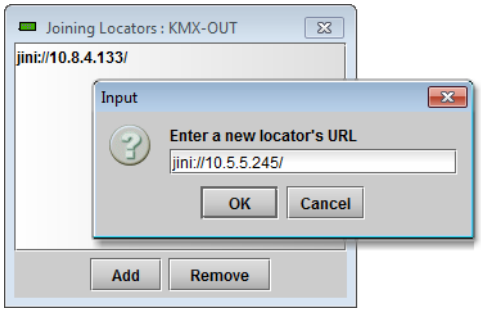

- Click **Add** to force the iControl service for this Kaleido-MX 4K card to register itself on a lookup service, by using the following syntax in the **Input** window:

  `jini://<ip_address>`

  where `<ip_address>` is the IP address of the server running the lookup service.
- Select one of the services listed in the window by clicking on it, and then click **Remove** to remove it from the list.

3 Specifications

This chapter lists equipment specifications for the Kaleido-MX 4K (3RU) multiviewers and their cards.

Kaleido-MX 4K Inputs

Video Inputs (32, 48, or 64)

The supported video input types include SD-SDI, HD-SDI, and 3G-SDI (auto-detected). The processing delay is two fields at the SDI outputs, if the video inputs are genlocked (two or three fields if the video inputs are not genlocked), or four fields at the SDI to HDMI converter's HDMI output. Signal inputs require DIN 1.0/2.3 connectors.

SD-SDI inputs

Signal	4:2:2 SMPTE ST 259-C (270 Mbps), SMPTE ST 272
Formats	525 and 625
Audio	SMPTE ST 274
Return loss	> 15 dB up to 270 MHz
Alignment jitter (100 kHz)	< 0.2 UI
Timing jitter (10 Hz)	< 1 UI
Cable length	250 m (820 ft) (Belden 1694A) 150 m (492 ft) (Belden 1855A)

HD-SDI inputs

Signal	SMPTE ST 292-1 (1.485, 1.485/1.001 Gbps)
Formats[a]	720p29.97, 720p30, 720p50, 720p59.94 1080i50, 1080i59.94 1080PsF23.98, 1080PsF24, 1080PsF25, 1080PsF29.97 1080p23.98, 1080p24, 1080p25, 1080p29.97, 1080p30
Audio	SMPTE ST 299
Return loss	> 15 dB up to 1.5 GHz
Alignment jitter (100 kHz)	< 0.2 UI
Timing jitter (10 Hz)	< 1 UI
Cable length	100 m (328 ft) (Belden 1694A) 45 m (148 ft) (Belden 1855A)

a. The Kaleido-X software does not distinguish between 1080PsF25 and 1080i50, between 1080PsF29.97 and 1080i59.94, between 720p29.97 and 720p30, and between 1080p29.97 and 1080p30. On the monitor wall and in XAdmin's Status and Options page, 1080PsF25 is reported as 1080i50, 1080PsF29.97 is reported as 1080i59.94, 720p30 as 720p29.97, and 1080p30 as 1080p29.97.

3G-SDI inputs

Signal	SMPTE ST 424 (2.97, 2.97/1.001 Gbps)
Formats	1080p50 1080p59.94
Audio	SMPTE ST 299
Return loss	> 15 dB up to 1.5 GHz > 10 dB up to 3 GHz
Alignment jitter (100 kHz)	< 0.3 UI
Timing jitter (10 Hz)	< 2 UI
Cable length	100 m (328 ft) (Belden 1694A) 45 m (148 ft) (Belden 1855A)

Graphic converted to HD-SDI from KXI-DVI-Bridge[a]

Signal	SMPTE ST 292-1 (1.485, 1.485/1.001 Gbps)
Format	1080p60
Cable length	100 m (328 ft) (Belden 1694A) 45 m (148 ft) (Belden 1855A)

a. A *Dual Channel DVI to HD Bridge* must be connected between the multiviewer and the PC or laptop that provides the graphics to the multiviewer. To order this optional device (Part No. KXI-DVI-BRIDGE), contact your Grass Valley sales representative.

Discrete Audio Inputs

The Kaleido-MX 4K (3RU) models support up to four ABT/MADI audio input.

ABT/MADI audio inputs

Signal	SMPTE ST 259-C (270 Mbps), SMPTE ST 305
Format	SDTI
Return Loss	>15 dB up to 270 MHz
Alignment jitter (100 kHz)	< 0.2UI
Timing jitter (10 Hz)	< 1UI
Cable length	250 m (820 ft) (Belden 1694A) 150 m (492 ft) (Belden 1855A)
Connector	DIN 1.0/2.3

Kaleido-MX 4K Outputs

The Kaleido-MX 4K (3RU) supports one seamless quad link (square division) 4K UHD output (with embedded audio), using the multiviewer's four SDI monitoring outputs.

3G-SDI monitoring outputs

Signal	SMPTE ST 424 (2.97 Gbps / 2.97/1.001 Gbps)
Formats (Level A only)	1080p 50 Hz 1080p 59.94 Hz
Audio	SMPTE ST 299-1 (limited to one pair, embedded on group 1, pair 1)
Return loss	> 15 dB up to 1.5 GHz > 10 dB up to 3 GHz
Alignment jitter (100 kHz)	< 0.3 UI
Timing jitter (10 Hz)	< 2 UI
Cable length	100 m (328 ft) (Belden 1694A) 45 m (148 ft) (Belden 1855A)
Connectors	DIN 1.0/2.3
Quantization	8 bits

The Kaleido-MX 4K (3RU) multiviewer models support one progressive scan HDMI 2.0 output, via the quad link SDI to HDMI converter that ships with each multiviewer.

HDMI output

Signal	HDMI 2.0
Format	4K UHDTV (3840 × 2160) Supported refresh rates: 50 Hz and 59.94 Hz
Audio	24 bits (one pair, embedded on group 1, pair 1)
Connector	HDMI standard type A connector
Signal path	8 bits 4:2:0 YCbCr

The Kaleido-MX 4K (3RU) supports four analog audio outputs:

Analog audio outputs

Signal	Unbalanced analog stereo
Impedance	10 kΩ
Level	2 V p-p
Connector	WECO

Kaleido-MX 4K Control

Reference Inputs

The Kaleido-MX 4K (3RU) models support two reference inputs.

Reference Input

Signal	Any 1 Vp-p nominal signal
Supported formats	SMPTE ST 170 SMPTE ST 318 ITU 624-4 BT 470-6 SMPTE ST 274 SMPTE ST 296
Return loss	> 35 dB up to 10 MHz
Coupling	DC
Level	0.3 Vp-p to 1.5 Vp-p
Impedance	75 Ω bridging
Max. common mode signal	28 Vp-p
Connector	DIN 1.0/2.3

LTC Inputs

The Kaleido-MX 4K (3RU) models support up to five unbalanced LTC inputs, for clock synchronization.

LTC Inputs (3, 4, or 5)

Signal	SMPTE ST 309-1999, SMPTE ST 12-1995 (EBU-3259-E)
Level	500 mVp-p to 10 Vp-p
Impedance	>12 kΩ
Connector	DIN 1.0/2.3

Communication

Ethernet (3)

Signal	10/100 BASE-T
Standard	IEEE 802.3
Connector	RJ-45

Serial ports (2)

Signal	RS-422 (SMPTE ST 207, EBU-3245), RS-485
Connector	RJ-45

USB (2)

Standard	USB version 2.0
Peripherals supported	Mouse, keyboard, memory stick
Connector	USB type A

GPI-1501 GPI I/O module

A GPI-1501 card supports 20 GPI inputs, and 8 configurable GPI inputs/outputs.

GPI INPUT (up to 40)

Description	Contact closure to GND
Connector	DB-44
Pull-up voltage	2.3 Volts
Source current	2 mA when input shorted
Low-level activation	0.8 Volts max
Over voltage	25 Volts max

GPI bidirectional (up to 16)

Description	Contact closure to GND
Signal	Open collector 5 to 12 VDC
Connector	DB-44
Input mode	
Pull-up voltage	2.3 Volts
Source current	2 mA when input shorted
Low-level activation	0.8 Volts max
Over voltage	25 Volts max
Output mode	
Contact closure current	50 mA max
Reverse voltage	-15 Volts max
Reverse current	-50 mA max
V out low	0.6 Volts at 1.5mA

Kaleido-MX 4K (3RU) Frame

Power supply	Hot-swappable redundant power supply
Input voltage	100-240 V AC
Current	3.25–1.35 A
Frequency	50/60 Hz
Power	325 W max
Dimensions	3RU × 485 mm (19 in) × 286 mm (11.25 in)
Weight	6.9 kg (15.2 lb) for 32 × 1 7.3 kg (16.1 lb) for 48 × 1 7.7 kg (16.9 lb) for 64 × 1 *Add 0,7 kg (1.5 lb) for the SDI to HDMI converter, if used.*
Full spec. temperature range	0–40°C (32–104°F) (ambient)
Max. storage humidity	90% RH non-condensing
Max. functional humidity	65% RH non-condensing
Communication ports	Ethernet 10/100BASE-T
Alarm	GPI contact

Contact Us

Grass Valley Technical Support

For technical assistance, contact our international support center, at 1-800-547-8949 (US and Canada) or +1 530 478 4148.

To obtain a local phone number for the support center nearest you, please consult the Contact Us section of Grass Valley's website (www.grassvalley.com).

An online form for e-mail contact is also available from the website.

Corporate Head Office

Grass Valley
3499 Douglas-B.-Floreani
St-Laurent, Quebec H4S 2C6
Canada
Telephone: +1 514 333 1772
Fax: +1 514 333 9828
www.grassvalley.com