grass valley

JUPITER

CM-4400: AccuSwitch Control System

Installation and Operation Manual

Software Version 8.0.0

www.grassvalley.com

071876602
February 2012

KEMA Quality

CERTIFICATE

Certificate Number: 510040.001

The Quality System of:

Grass Valley USA, LLC and its Grass Valley Affiliates

Headquarters:
400 Providence Mine Road
Nevada City, CA 95945
United States

15655 SW Greystone Ct.
Beaverton, OR 97006
United States

Brunnenweg 9
D-64331 Weiterstadt
Germany

Kapittelweg 10
4827 HG Breda
The Nederlands

2300 So. Decker Lake Blvd.
Salt Lake City, UT 84119
United States

Including its implementation, meets the requirements of the standard:

ISO 9001:2008

Scope:
The design, manufacture and support of video and audio hardware and software products and related systems.

This Certificate is valid until:	June 14, 2012
This Certificate is valid as of:	December 23, 2010
Certified for the first time:	June 14, 2000

H. Pierre Sallé
President
KEMA-Registered Quality

The method of operation for quality certification is defined in the KEMA General Terms And Conditions For Quality And Environmental Management Systems Certifications. Integral publication of this certificate is allowed.

KEMA-Registered Quality, Inc.
4377 County Line Road
Chalfont, PA 18914
Ph: (215)997-4519
Fax: (215)997-3809
CRT 001 042108

Accredited By:
ANAB

a DEKRA company

grass valley

JUPITER

CM-4400: AccuSwitch Control System

Installation and Operation Manual

Software Version 8.0.0

www.grassvalley.com

071876602
February 2012

Contacting Grass Valley

International Support Centers	**France 24 x 7**	+800 8080 2020 or +33 1 48 25 20 20	**United States/Canada 24 x 7**	+1 800 547 8949 or +1 530 478 4148
Local Support Centers (available during normal business hours)	**Asia**	**Hong Kong, Taiwan, Korea, Macau:** +852 2531 3058 **Indian Subcontinent:** +91 22 24933476 **Southeast Asia/Malaysia:** +603 7492 3303 **Southeast Asia/Singapore:** +65 6379 1313 **China:** +861 0660 159 450 **Japan:** +81 3 5484 6868		
	Australia and New Zealand: +61 1300 721 495			**Central/South America:** +55 11 5509 3443
	Middle East: +971 4 299 64 40 **Near East and Africa:** +800 8080 2020 or +33 1 48 25 20 20			
	Europe	**Belarus, Russia, Tadzikistan, Ukraine, Uzbekistan:** +7 095 2580924 225 **Switzerland:** +41 1 487 80 02 **S. Europe/Italy-Roma:** +39 06 87 20 35 28 **-Milan:** +39 02 48 41 46 58 **S. Europe/Spain:** +34 91 512 03 50 **Benelux/Belgium:** +32 (0) 2 334 90 30 **Benelux/Netherlands:** +31 (0) 35 62 38 42 1 **N. Europe:** +45 45 96 88 70 **Germany, Austria, Eastern Europe:** +49 6150 104 444 **UK, Ireland, Israel:** +44 118 923 0499		

Copyright © Grass Valley USA, LLC. All rights reserved.
This product may be covered by one or more U.S. and foreign patents.

Grass Valley Web Site

The www.grassvalley.com web site offers the following:

Online User Documentation — Current versions of product catalogs, brochures, data sheets, ordering guides, planning guides, manuals, and release notes in .pdf format can be downloaded.

FAQ Database — Solutions to problems and troubleshooting efforts can be found by searching our Frequently Asked Questions (FAQ) database.

Software Downloads — Download software updates, drivers, and patches.

grass valley

END-OF-LIFE PRODUCT RECYCLING NOTICE

Grass Valley's innovation and excellence in product design also extends to the programs we've established to manage the recycling of our products. Grass Valley has developed a comprehensive end-of-life product take back program for recycle or disposal of end-of-life products. Our program meets the requirements of the European Union's WEEE Directive, the United States Environmental Protection Agency, and U.S. state and local agencies.

Grass Valley's end-of-life product take back program assures proper disposal by use of Best Available Technology. This program accepts any Grass Valley branded equipment. Upon request, a Certificate of Recycling or a Certificate of Destruction, depending on the ultimate disposition of the product, can be sent to the requester.

Grass Valley will be responsible for all costs associated with recycling and disposal, including freight. However, you are responsible for the removal of the equipment from your facility and packing the equipment to make it ready for pickup.

For further information on the Grass Valley product take back system please contact Grass Valley at + 800 80 80 20 20 or +33 1 48 25 20 20 from most other countries. In the U.S. and Canada please call 800-547-8949, and ask to be connected to the EH&S Department. Additional information concerning the program can be found at: www.grassvalley.com/about/environmental-policy

001187401

Contents

Safety Summary . . . 9
Safety Terms and Symbols . . . 9
Terms in This Manual . . . 9
Terms on the Product . . . 9
Symbols on the Product . . . 10
Warnings . . . 10
Cautions . . . 11
Regulatory Notices . . . 21
Certifications and Compliances . . . 21
FCC Emission Control . . . 21
Canadian EMC Notice of Compliance . . . 21
EN55022 Class A Warning . . . 21
Canadian Certified Power Cords . . . 22
Canadian Certified AC Adapter . . . 22
Laser Compliance . . . 22
Laser Safety Requirements . . . 22
Laser Safety . . . 22
FCC Emission Limits . . . 23
Certifications: . . . 23
ESD Protection . . . 25
Recommended ESD Guidelines . . . 25
Sources of ESD and Risks . . . 26
Grounding Requirements for Personnel . . . 27

Preface . . . 29
About This Manual . . . 29
Standard Documentation . . . 29
Other Documentation . . . 30

Section 1 — Introduction . . . 31
Overview . . . 31
CM-4400 System Controller . . . 31
CM-4400 Jupiter AccuSwitch Control System . . . 32
Control Functions . . . 34
Distribution Routing Switcher Control . . . 34
Path Finding Option . . . 34
Remote (Serial Control) Routing switcher Interface Option . . . 34
External Control Protocols . . . 34
Control Panels . . . 35
Software Control Panels (GUI Control Panel) . . . 35
File Server (Configuration PC) . . . 35
System Logger . . . 36
Jupiter Configurator Editor . . . 36
Ordering Information . . . 36

Section 2 — Hardware Installation 37
Unpacking and Inspection 37
Verifying 110 or 230 VAC Selection 37
Rack Mounting 37
Connecting the CM-4400 to the Jupiter LAN 39
CM-4400 Connections 39
Jupiter File Server Connection 40
Ethernet Switch to System Controller Connection 40
Configuring AccuSwitch Control Panel Connections 41
Connection Type 42
Additional Connections 43
CM-4400 Control System Protection Features 43
Alarm Modes 43
Control Module Alarm Circuit 44
Alarms in a Single CM-4400 Installation 44
Alarms in a Redundant CM-4400 Installation 44
Redundant Units 45
Manually Switching A CM-4400 46
Replacing a Failed Unit 46
Verifying the Replaced Unit Ready for Use 47
Correcting Problems with the Replacement 47
Installing Redundant CM-4400 Control Modules 48
Connecting to Serial Controlled Routers 50
Jupiter Control of Encore 52
Non-Redundant Installation 53
Cabling 53
Software Configuration 55
Redundant Installation 55
Double-Y Cable 56
Software Configuration (Redundant Systems) 59
Logical Level Mapping 60
Data Matrix Switching 60
Hardware Connections 61
Software Configuration 61
Encore Control of Jupiter 61
Connecting to Multiple Crosspoint Bus Distribution Switchers 62
Using a Single CM-4400 62
Dedicated CM-4400 Per Switcher 63
Multiple Distribution Switchers with Path Finding 64
Sequential Path Finding (Sequential Wiring) 65
Non-sequential Path Finding (Non-sequential Wiring) 66
Path Finding with Data Routers 67
Data Router Constraints 68
Installing a File Server PC 68
Jupiter LAN 68
Printers 69
Software Installation 69
Remote PC Installation 69
Control Panel Installation 70
Sync Reference Cables 70
Time Code Connections 70
Master Control Connection 70
CC 2010 Matrix (Crosspoint Bus) Cable 71

Crosspoint Bus Cables Diagram 71
VDE EMI/RFI Modifications to Matrix Cables 72
CB 3000 Control Buffer 73
Routing Switcher Requirements 73
Thomson/Philips DD Series (Diamond) Connection 74
Automation and Other Systems Connections 74
Devices Using "ESswitch" ESbus Routing Switcher Dialect 74
Devices using Jupiter ASCII Computer Interface Protocol 75

Section 3 — Software Installation 79

Installation 79
Caveats 79
Equipment Required 80
Software Required 80
Materials Supplied 80
Software Update 80
Removing the Previous Version 81
Installing the Latest Version 83
Windows XP Professional Installation 83
Windows 7 Professional Installation 89
Removing Jupiter Software 95

Section 4 — Jupiter Network Suite Control Console 97

Overview 97
Launching the Control Console 98
Program Groups 100
JNS Applications Group 101
JNS Tools Group 101
JNS Utilities Group 101
JNS Servers Group 101
Accessing a Program Within a Group 102
Jupiter Settings Dialog Box 103
Restart Procedures 104
Selecting the Reboot Option 105
Configuration Tab 105
Board Info /Control Tab 105
Front Panel Reset Button 106
Power Cycling 107
Console Port 107
Clearing Persistent Memory (PMEM) 107

Section 5 — Configurator Application 109

Overview 109
Starting the Configurator Application 109
AccuSwitch Configuration File 112
Configure a New Set 113
Create Control Panel Sets 113
Export a Configuration Set 113
Upload a Configuration File 115
Unzip, Open, Edit, and Compile the Configuration Set 118
Configuration Error Check – CPES-SER Device Type 118

Access Jupiter Tables 119
Close Configurator Application 120
Configurator Editing Guidelines 120
Automatic Table Entry 121
Enter/Edit Information in a Jupiter Table. 121
Navigate and Copy Rows 123
Reorder Jupiter Tables 123
Find/Fill/Increment. 125
Find Command 125
Fill Command 126
Increment Command 126
Copy and Paste a Block 127
Copy and Paste Rows. 129
Naming Rules 130
Configuration Set Management 131
Modify and Download Configuration Set 131
Copy Configuration Set 132
Edit Configuration Set 133
Use Numeric Sets for Quick Switcher Checkout 134
Validate, Compile, and Activate (Downloading) Configuration Set 135
Download Now/Reboot Later (Pending Reboot) 137
Mismatch Indicator. 141
Troubleshooting 143
Error Conditions 143
Program Crash Recovery. 143
ZIP a Configuration Set 143
ZIP Configuration Set with Diagnostic Information (Support Package) 143
Printing 144
On-line Help 144
Inadvertent Loss of Power. 144
Disconnect File Server from LAN 144
Passwords 144
Overview 144
Change Password 147
Set Control Panel Password Levels 149
Set Switcher Output Password Levels 150
Force Unprotect/Unlock 150
Network Description Table. 151
Automatic Table Entry Feature. 151
Enter Controller Board Descriptions 152
Serial Protocol Table 153
Enter Controller Board Protocol 155
Serial Protocol Selection Options 155
Additional Protocol Notes 156
Saturn Video Processor – Entry for MPK Port 156
Connect L-S or LCD Series Control Panels 157
Switcher Level Descriptions 157
Switcher Input Table 163
Split Switching 164
Enter/Edit Input Names and Numbers 165
Data Switching Applications. 166
Controller/Tributary Reassignment 167
CP Input/Output Sets and Control Panel Operation 169
Switcher Output Table. 169

Security 170
Enter/Edit Output Names and Numbers 170
Set Switcher Output Password Levels 171
Control Panel Sets Dialog Box. 172
Control Panel Level Set. 173
Entering Level Information 174
Level Numbering and External Control Computers Using ASCII Protocol 175
Control Panel Input Set. 175
Creating an Input CP Set 175
Entering Information – Input Set Table 177
Copy a CP Input Set to Use With a Different Panel Type 177
Control Panel Output Set 179
Create a CP Output Set 179
Enter Output Set Table Information 180
Optional Entries 181
Copy CP Output Set to Use with a Different Panel Type 181
Control Panel Override Set 181
Defining Overrides 181
Enter Override Set Table Information. 183
Control Panel Sequence Set 183
Defining a Sequence Set 184
Adding/Editing Sequences 185
Control Panel Category Set 185
Defining Categories 186
Change Category Set Associated With an Input or Output Set 186
CPESXTND Sets 187
Category Selection and Error 190
MPK Devices Table 190
MPK Devices Table Description 191
Configure Control Panel for Full-matrix, Multi-bus, or Single-bus Control . 192
Zero-Downtime Feature 192
L-S or LCD Panels Entries 193
Sequential Path Finding Table 193
Path Finding – Three or More Switchers 196
Table Entries 197
Alternate Routes – Manual Selection 197
Path Finding Between Analog and Digital Equipment. 198
Convert Analog Signals to Combined Digital Signals 198
Non-sequential Path Finding Table 200
Configure an Exclusion Table 202
Time Standard Table. 203
Set Time Code Information 203
Time Standard Table Description 204
Use Numeric Sets for Quick Switcher Checkout 205
Video Reference Table 206
Point-to-Point Switching 207
Switching Router Options 207
SAFE input 208
Remote System Routing 208
Remote System Routing Characteristics 210
AccuSwitch Software Configuration 210
Network Description Tables. 210
Switcher Description Tables 212
CP Level Set Tables 215

MPK Devices Tables 215
Path Finding 221

Section 6 — Board Status – JNS Tools 223

Overview 223
Menus 223
File 223
Options 224
Help 224
Table Description 224

Section 7 — Jupiter Control Center 227

Overview 227
Menu Commands 228
File Menu 228
Options Menu 228
JNS Control Center Tabs 228
Board Status 229
TFTP Status 229
Board Info/Control 230
Selecting Boards 231
Configuration 233
Reboot Processor 236
BOOTP 238

Section 8 — Router Control Application 239

Overview 239
Display Status 240
Perform Takes 241

Section 9 — Force Unlock 243

Overview 243
Table Description 243
Menu Bar 244
Unlock and Un-protect 244
Unlock and Un-protect an Output 244
Unlock and Un-protect an Individual Output 245

Section 10 — Logger and Log Viewer 247

Overview 247
Run the JNS Logger 248
Run the JNS Log Viewer 249
Dynamic Displays 250
Static Displays 252
Date/Time Filter 253
Print/Export a Display 253
Adjust Column Widths 255
Options 255

Section 11 — Troubleshooting . . . 257

CM-4400 Checklist . . . 257
CB 3000 Crosspoint Buffer and Interface . . . 258
Red LEDs . . . 258
Green LEDs . . . 259
CM-4400 System Codes . . . 259
Error Codes . . . 259
Startup Codes . . . 270
Shutdown Codes . . . 270
Other Codes . . . 271

Section 12 — Jupiter ASCII Communications Protocol . . . 273

Overview . . . 273
ASCII Data Format . . . 274
ASCII Commands . . . 274

Appendix A — CM-4400 Specifications . . . 277

Electrical . . . 277
CM-4400 Control Module . . . 277
Matrix Routing Switcher Control Buses . . . 278
File Server Minimum Specifications . . . 279
Software Required . . . 279
Equipment Dimensions . . . 279
CM-4400 System Controller . . . 279
CB 3000 Control Buffer . . . 280
PC 3000 File Server . . . 280
System Limitations . . . 280
Maximum Number of Logical Levels . . . 280
CM-4400 Serial Bus Loading . . . 281
Calculating Loading . . . 281
Calculating Loading Example . . . 282
Supported Data Routers . . . 282

Appendix B — Connecting Legacy and 3rd Party Routers . . . 283

Matrix Router Control Buses . . . 283
Supported Protocols . . . 283
Automation Interface Protocols . . . 283
Supported Routers . . . 283
Serial Control Routing Switcher Protocols . . . 284
Support for Wild Card Characters in the ES LAN Protocol . . . 284
Physical IO Limits . . . 284
Triton Systems . . . 285
SMS 7000 Connections . . . 286
Horizon Matrix Routing Switcher Connections . . . 288
Datatek D-2000/2166 Connections . . . 289
Utah Scientific Party Line Connection Using UDI-1B . . . 290
Nexus Audio Routing System . . . 292
Pro-Bel SW-P-08 Protocol . . . 293
Jupiter Router Control . . . 294
Enter Serial Protocol Information . . . 294
Enter MPK Information . . . 296

Pro-Bel SW-P-08 Protocol Commands 297
Remote Router Control 297
Determine Protocol Matrix and Level 298
Remote Router Values 299
Enter Serial Protocol information 300
Pro-Bel SW-P-08 Interface Implementation Notes 301
P8R (SW-P-08 Router Control) 301
P08 (SW-P-08 Control Panel) 302
Physical Serial Interface 303

Index 1

Safety Summary

Read and follow the important safety information below, noting especially those instructions related to risk of fire, electric shock or injury to persons. Additional specific warnings not listed here may be found throughout the manual.

WARNING Any instructions in this manual that require opening the equipment cover or enclosure are for use by qualified service personnel only. To reduce the risk of electric shock, do not perform any servicing other than that contained in the operating instructions unless you are qualified to do so.

Safety Terms and Symbols

Terms in This Manual

Safety-related statements may appear in this manual in the following form:

WARNING Warning statements identify conditions or practices that may result in personal injury or loss of life.

CAUTION Caution statements identify conditions or practices that may result in damage to equipment or other property, or which may cause equipment crucial to your business environment to become temporarily non-operational.

Terms on the Product

The following terms may appear on the product:

DANGER — A personal injury hazard is immediately accessible as you read the marking.

WARNING — A personal injury hazard exists but is not immediately accessible as you read the marking.

CAUTION — A hazard to property, product, and other equipment is present.

Symbols on the Product

The following symbols may appear on the product:

Indicates that dangerous high voltage is present within the equipment enclosure that may be of sufficient magnitude to constitute a risk of electric shock.

Indicates that user, operator or service technician should refer to product manual(s) for important operating, maintenance, or service instructions.

This is a prompt to note fuse rating when replacing fuse(s). The fuse referenced in the text must be replaced with one having the ratings indicated.

Identifies a protective grounding terminal which must be connected to earth ground prior to making any other equipment connections.

Identifies an external protective grounding terminal which may be connected to earth ground as a supplement to an internal grounding terminal.

Indicates that static sensitive components are present which may be damaged by electrostatic discharge. Use anti-static procedures, equipment and surfaces during servicing.

Warnings

The following warning statements identify conditions or practices that can result in personal injury or loss of life:

Dangerous voltage or current may be present — Disconnect power and remove battery (if applicable) before removing protective panels, soldering, or replacing components.

Do not service alone — Do not internally service this product unless another person capable of rendering first aid and resuscitation is present.

Remove jewelry — Prior to servicing, remove jewelry such as rings, watches, and other metallic objects.

Avoid exposed circuitry — Do not touch exposed connections, components or circuitry when power is present.

Use proper power cord — Use only the power cord supplied or specified for this product.

Ground product — Connect the grounding conductor of the power cord to earth ground.

Operate only with covers and enclosure panels in place — Do not operate this product when covers or enclosure panels are removed.

Use correct fuse — Use only the fuse type and rating specified for this product.

Use only in dry environment — Do not operate in wet or damp conditions.

Use only in non-explosive environment — Do not operate this product in an explosive atmosphere.

High leakage current may be present — Earth connection of product is essential before connecting power.

Dual power supplies may be present — Be certain to plug each power supply cord into a separate branch circuit employing a separate service ground. Disconnect both power supply cords prior to servicing.

Double pole neutral fusing — Disconnect mains power prior to servicing.

Use proper lift points — Do not use door latches to lift or move equipment.

Avoid mechanical hazards — Allow all rotating devices to come to a stop before servicing.

Cautions

The following caution statements identify conditions or practices that can result in damage to equipment or other property:

Use correct power source — Do not operate this product from a power source that applies more than the voltage specified for the product.

Use correct voltage setting — If this product lacks auto-ranging power supplies, before applying power ensure that the each power supply is set to match the power source.

Provide proper ventilation — To prevent product overheating, provide equipment ventilation in accordance with installation instructions.

Use anti-static procedures — Static sensitive components are present which may be damaged by electrostatic discharge. Use anti-static procedures, equipment and surfaces during servicing.

Do not operate with suspected equipment failure — If you suspect product damage or equipment failure, have the equipment inspected by qualified service personnel.

Ensure mains disconnect — If mains switch is not provided, the power cord(s) of this equipment provide the means of disconnection. The socket outlet must be installed near the equipment and must be easily accessible. Verify that all mains power is disconnected before installing or removing power supplies and/or options.

Route cable properly — Route power cords and other cables so that they ar not likely to be damaged. Properly support heavy cable bundles to avoid connector damage.

Use correct power supply cords — Power cords for this equipment, if provided, meet all North American electrical codes. Operation of this equipment at voltages exceeding 130 VAC requires power supply cords which comply with NEMA configurations. International power cords, if provided, have the approval of the country of use.

Use correct replacement battery — This product may contain batteries. To reduce the risk of explosion, check polarity and replace only with the same or equivalent type recommended by manufacturer. Dispose of used batteries according to the manufacturer's instructions.

Troubleshoot only to board level — Circuit boards in this product are densely populated with surface mount technology (SMT) components and application specific integrated circuits (ASICS). As a result, circuit board repair at the component level is very difficult in the field, if not impossible. For warranty compliance, do not troubleshoot systems beyond the board level.

Sicherheit – Überblick

Lesen und befolgen Sie die wichtigen Sicherheitsinformationen dieses Abschnitts. Beachten Sie insbesondere die Anweisungen bezüglich Brand-, Stromschlag- und Verletzungsgefahren. Weitere spezifische, hier nicht aufgeführte Warnungen finden Sie im gesamten Handbuch.

WARNUNG Alle Anweisungen in diesem Handbuch, die das Abnehmen der Geräteabdeckung oder des Gerätegehäuses erfordern, dürfen nur von qualifiziertem Servicepersonal ausgeführt werden. Um die Stromschlaggefahr zu verringern, führen Sie keine Wartungsarbeiten außer den in den Bedienungsanleitungen genannten Arbeiten aus, es sei denn, Sie besitzen die entsprechende Qualifikationen für diese Arbeiten.

Sicherheit – Begriffe und Symbole

In diesem Handbuch verwendete Begriffe

Sicherheitsrelevante Hinweise können in diesem Handbuch in der folgenden Form auftauchen:

WARNUNG Warnungen weisen auf Situationen oder Vorgehensweisen hin, die Verletzungs- oder Lebensgefahr bergen.

VORSICHT Vorsichtshinweise weisen auf Situationen oder Vorgehensweisen hin, die zu Schäden an Ausrüstungskomponenten oder anderen Gegenständen oder zum zeitweisen Ausfall wichtiger Komponenten in der Arbeitsumgebung führen können.

Hinweise am Produkt

Die folgenden Hinweise können sich am Produkt befinden:

GEFAHR — Wenn Sie diesen Begriff lesen, besteht ein unmittelbares Verletzungsrisiko.

WARNUNG — Wenn Sie diesen Begriff lesen, besteht ein mittelbares Verletzungsrisiko.

VORSICHT — Es besteht ein Risiko für Objekte in der Umgebung, den Mixer selbst oder andere Ausrüstungskomponenten.

Symbole am Produkt

Die folgenden Symbole können sich am Produkt befinden:

Weist auf eine gefährliche Hochspannung im Gerätegehäuse hin, die stark genug sein kann, um eine Stromschlaggefahr darzustellen.

Weist darauf hin, dass der Benutzer, Bediener oder Servicetechniker wichtige Bedienungs-, Wartungs- oder Serviceanweisungen in den Produkthandbüchern lesen sollte.

Dies ist eine Aufforderung, beim Wechsel von Sicherungen auf deren Nennwert zu achten. Die im Text angegebene Sicherung muss durch eine Sicherung ersetzt werden, die die angegebenen Nennwerte besitzt.

Weist auf eine Schutzerdungsklemme hin, die mit dem Erdungskontakt verbunden werden muss, bevor weitere Ausrüstungskomponenten angeschlossen werden.

Weist auf eine externe Schutzerdungsklemme hin, die als Ergänzung zu einem internen Erdungskontakt an die Erde angeschlossen werden kann.

Weist darauf hin, dass es statisch empfindliche Komponenten gibt, die durch eine elektrostatische Entladung beschädigt werden können. Verwenden Sie antistatische Prozeduren, Ausrüstung und Oberflächen während der Wartung.

Warnungen

Die folgenden Warnungen weisen auf Bedingungen oder Vorgehensweisen hin, die Verletzungs- oder Lebensgefahr bergen:

Gefährliche Spannungen oder Ströme — Schalten Sie den Strom ab, und entfernen Sie ggf. die Batterie, bevor sie Schutzabdeckungen abnehmen, löten oder Komponenten austauschen.

Servicearbeiten nicht alleine ausführen — Führen Sie interne Servicearbeiten nur aus, wenn eine weitere Person anwesend ist, die erste Hilfe leisten und Wiederbelebungsmaßnahmen einleiten kann.

Schmuck abnehmen — Legen Sie vor Servicearbeiten Schmuck wie Ringe, Uhren und andere metallische Objekte ab.

Keine offen liegenden Leiter berühren — Berühren Sie bei eingeschalteter Stromzufuhr keine offen liegenden Leitungen, Komponenten oder Schaltungen.

Richtiges Netzkabel verwenden — Verwenden Sie nur das mitgelieferte Netzkabel oder ein Netzkabel, das den Spezifikationen für dieses Produkt entspricht.

Gerät erden — Schließen Sie den Erdleiter des Netzkabels an den Erdungskontakt an.

Gerät nur mit angebrachten Abdeckungen und Gehäuseseiten betreiben — Schalten Sie dieses Gerät nicht ein, wenn die Abdeckungen oder Gehäuseseiten entfernt wurden.

Richtige Sicherung verwenden — Verwenden Sie nur Sicherungen, deren Typ und Nennwert den Spezifikationen für dieses Produkt entsprechen.

Gerät nur in trockener Umgebung verwenden — Betreiben Sie das Gerät nicht in nassen oder feuchten Umgebungen.

Gerät nur verwenden, wenn keine Explosionsgefahr besteht — Verwenden Sie dieses Produkt nur in Umgebungen, in denen keinerlei Explosionsgefahr besteht.

Hohe Kriechströme — Das Gerät muss vor dem Einschalten unbedingt geerdet werden.

Doppelte Spannungsversorgung kann vorhanden sein — Schließen Sie die beiden Anschlußkabel an getrennte Stromkreise an. Vor Servicearbeiten sind beide Anschlußkabel vom Netz zu trennen.

Zweipolige, neutrale Sicherung — Schalten Sie den Netzstrom ab, bevor Sie mit den Servicearbeiten beginnen.

Fassen Sie das Gerät beim Transport richtig an — Halten Sie das Gerät beim Transport nicht an Türen oder anderen beweglichen Teilen fest.

Gefahr durch mechanische Teile — Warten Sie, bis der Lüfter vollständig zum Halt gekommen ist, bevor Sie mit den Servicearbeiten beginnen.

Vorsicht

Die folgenden Vorsichtshinweise weisen auf Bedingungen oder Vorgehensweisen hin, die zu Schäden an Ausrüstungskomponenten oder anderen Gegenständen führen können:

Gerät nicht öffnen — Durch das unbefugte Öffnen wird die Garantie ungültig.

Richtige Spannungsquelle verwenden — Betreiben Sie das Gerät nicht an einer Spannungsquelle, die eine höhere Spannung liefert als in den Spezifikationen für dieses Produkt angegeben.

Gerät ausreichend belüften — Um eine Überhitzung des Geräts zu vermeiden, müssen die Ausrüstungskomponenten entsprechend den Installationsanweisungen belüftet werden. Legen Sie kein Papier unter das Gerät. Es könnte die Belüftung behindern. Platzieren Sie das Gerät auf einer ebenen Oberfläche.

Antistatische Vorkehrungen treffen — Es gibt statisch empfindliche Komponenten, die durch eine elektrostatische Entladung beschädigt werden können. Verwenden Sie antistatische Prozeduren, Ausrüstung und Oberflächen während der Wartung.

CF-Karte nicht mit einem PC verwenden — Die CF-Karte ist speziell formatiert. Die auf der CF-Karte gespeicherte Software könnte gelöscht werden.

Gerät nicht bei eventuellem Ausrüstungsfehler betreiben — Wenn Sie einen Produktschaden oder Ausrüstungsfehler vermuten, lassen Sie die Komponente von einem qualifizierten Servicetechniker untersuchen.

Kabel richtig verlegen — Verlegen Sie Netzkabel und andere Kabel so, dass Sie nicht beschädigt werden. Stützen Sie schwere Kabelbündel ordnungsgemäß ab, damit die Anschlüsse nicht beschädigt werden.

Richtige Netzkabel verwenden — Wenn Netzkabel mitgeliefert wurden, erfüllen diese alle nationalen elektrischen Normen. Der Betrieb dieses Geräts mit Spannungen über 130 V AC erfordert Netzkabel, die NEMA-Konfigurationen entsprechen. Wenn internationale Netzkabel mitgeliefert wurden, sind diese für das Verwendungsland zugelassen.

Richtige Ersatzbatterie verwenden — Dieses Gerät enthält eine Batterie. Um die Explosionsgefahr zu verringern, prüfen Sie die Polarität und tauschen die Batterie nur gegen eine Batterie desselben Typs oder eines gleichwertigen, vom Hersteller empfohlenen Typs aus. Entsorgen Sie gebrauchte Batterien entsprechend den Anweisungen des Batterieherstellers.

Das Gerät enthält keine Teile, die vom Benutzer gewartet werden können. Wenden Sie sich bei Problemen bitte an den nächsten Händler.

Consignes de sécurité

Il est recommandé de lire, de bien comprendre et surtout de respecter les informations relatives à la sécurité qui sont exposées ci-après, notamment les consignes destinées à prévenir les risques d'incendie, les décharges électriques et les blessures aux personnes. Les avertissements complémentaires, qui ne sont pas nécessairement repris ci-dessous, mais présents dans toutes les sections du manuel, sont également à prendre en considération.

AVERTISSEMENT **Toutes les instructions présentes dans ce manuel qui concernent l'ouverture des capots ou des logements de cet équipement sont destinées exclusivement à des membres qualifiés du personnel de maintenance. Afin de diminuer les risques de décharges électriques, ne procédez à aucune intervention d'entretien autre que celles contenues dans le manuel de l'utilisateur, à moins que vous ne soyez habilité pour le faire.**

Consignes et symboles de sécurité

Termes utilisés dans ce manuel

Les consignes de sécurité présentées dans ce manuel peuvent apparaître sous les formes suivantes:

AVERTISSEMENT **Les avertissements signalent des conditions ou des pratiques susceptibles d'occasionner des blessures graves, voire même fatales.**

ATTENTION Les mises en garde signalent des conditions ou des pratiques susceptibles d'occasionner un endommagement à l'équipement ou aux installations, ou de rendre l'équipement temporairement non opérationnel, ce qui peut porter préjudice à vos activités.

Signalétique apposée sur le produit

La signalétique suivante peut être apposée sur le produit:

DANGER — risque de danger imminent pour l'utilisateur.

AVERTISSEMENT — Risque de danger non imminent pour l'utilisateur.

MISE EN GARDE — Risque d'endommagement du produit, des installations ou des autres équipements.

Symboles apposés sur le produit

Les symboles suivants peut être apposés sur le produit:

Signale la présence d'une tension élevée et dangereuse dans le boîtier de l'équipement ; cette tension peut être suffisante pour constituer un risque de décharge électrique.

Signale que l'utilisateur, l'opérateur ou le technicien de maintenance doit faire référence au(x) manuel(s) pour prendre connaissance des instructions d'utilisation, de maintenance ou d'entretien.

Il s'agit d'une invite à prendre note du calibre du fusible lors du remplacement de ce dernier. Le fusible auquel il est fait référence dans le texte doit être remplacé par un fusible du même calibre.

Identifie une borne de protection de mise à la masse qui doit être raccordée correctement avant de procéder au raccordement des autres équipements.

Identifie une borne de protection de mise à la masse qui peut être connectée en tant que borne de mise à la masse supplémentaire.

Signale la présence de composants sensibles à l'électricité statique et qui sont susceptibles d'être endommagés par une décharge électrostatique. Utilisez des procédures, des équipements et des surfaces antistatiques durant les interventions d'entretien.

Avertissements

Les avertissements suivants signalent des conditions ou des pratiques susceptibles d'occasionner des blessures graves, voire même fatales:

Présence possible de tensions ou de courants dangereux — Mettez hors tension, débranchez et retirez la pile (le cas échéant) avant de déposer les couvercles de protection, de défaire une soudure ou de remplacer des composants.

Ne procédez pas seul à une intervention d'entretien — Ne réalisez pas une intervention d'entretien interne sur ce produit si une personne n'est pas présente pour fournir les premiers soins en cas d'accident.

Retirez tous vos bijoux — Avant de procéder à une intervention d'entretien, retirez tous vos bijoux, notamment les bagues, la montre ou tout autre objet métallique.

Évitez tout contact avec les circuits exposés — Évitez tout contact avec les connexions, les composants ou les circuits exposés s'ils sont sous tension.

Utilisez le cordon d'alimentation approprié — Utilisez exclusivement le cordon d'alimentation fourni avec ce produit ou spécifié pour ce produit.

Raccordez le produit à la masse — Raccordez le conducteur de masse du cordon d'alimentation à la borne de masse de la prise secteur.

Utilisez le produit lorsque les couvercles et les capots sont en place — N'utilisez pas ce produit si les couvercles et les capots sont déposés.

Utilisez le bon fusible — Utilisez exclusivement un fusible du type et du calibre spécifiés pour ce produit.

Utilisez ce produit exclusivement dans un environnement sec — N'utilisez pas ce produit dans un environnement humide.

Utilisez ce produit exclusivement dans un environnement non explosible — N'utilisez pas ce produit dans un environnement dont l'atmosphère est explosible.

Présence possible de courants de fuite — Un raccordement à la masse est indispensable avant la mise sous tension.

Deux alimentations peuvent être présentes dans l'équipement — Assurez vous que chaque cordon d'alimentation est raccordé à des circuits de terre séparés. Débranchez les deux cordons d'alimentation avant toute intervention.

Fusion neutre bipolaire — Débranchez l'alimentation principale avant de procéder à une intervention d'entretien.

Utilisez les points de levage appropriés — Ne pas utiliser les verrous de la porte pour lever ou déplacer l'équipement.

Évitez les dangers mécaniques — Laissez le ventilateur s'arrêter avant de procéder à une intervention d'entretien.

Mises en garde

Les mises en garde suivantes signalent les conditions et les pratiques susceptibles d'occasionner des endommagements à l'équipement et aux installations:

N'ouvrez pas l'appareil — Toute ouverture prohibée de l'appareil aura pour effet d'annuler la garantie.

Utilisez la source d'alimentation adéquate — Ne branchez pas ce produit à une source d'alimentation qui utilise une tension supérieure à la tension nominale spécifiée pour ce produit.

Assurez une ventilation adéquate — Pour éviter toute surchauffe du produit, assurez une ventilation de l'équipement conformément aux instructions d'installation. Ne déposez aucun document sous l'appareil — ils peuvent gêner la ventilation. Placez l'appareil sur une surface plane.

Utilisez des procédures antistatiques - Les composants sensibles à l'électricité statique présents dans l'équipement sont susceptibles d'être endommagés par une décharge électrostatique. Utilisez des procédures, des équipements et des surfaces antistatiques durant les interventions d'entretien.

N'utilisez pas la carte CF avec un PC — La carte CF a été spécialement formatée. Le logiciel enregistré sur la carte CF risque d'être effacé.

N'utilisez pas l'équipement si un dysfonctionnement est suspecté — Si vous suspectez un dysfonctionnement du produit, faites inspecter celui-ci par un membre qualifié du personnel d'entretien.

Acheminez les câbles correctement — Acheminez les câbles d'alimentation et les autres câbles de manière à ce qu'ils ne risquent pas d'être endommagés. Supportez correctement les enroulements de câbles afin de ne pas endommager les connecteurs.

Utilisez les cordons d'alimentation adéquats — Les cordons d'alimentation de cet équipement, s'ils sont fournis, satisfont aux exigences de toutes les réglementations régionales. L'utilisation de cet équipement à des tensions dépassant les 130 V en c.a. requiert des cordons d'alimentation qui satisfont aux exigences des configurations NEMA. Les cordons internationaux, s'ils sont fournis, ont reçu l'approbation du pays dans lequel l'équipement est utilisé.

Utilisez une pile de remplacement adéquate — Ce produit renferme une pile. Pour réduire le risque d'explosion, vérifiez la polarité et ne remplacez la pile que par une pile du même type, recommandée par le fabricant. Mettez les piles usagées au rebut conformément aux instructions du fabricant des piles.

Cette unité ne contient aucune partie qui peut faire l'objet d'un entretien par l'utilisateur. Si un problème survient, veuillez contacter votre distributeur local.

Regulatory Notices

Certifications and Compliances

FCC Emission Control

This equipment has been tested and found to comply with the limits for a Class A digital device, pursuant to Part 15 of the FCC Rules. These limits are designed to provide reasonable protection against harmful interference when the equipment is operated in a commercial environment. This equipment generates, uses, and can radiate radio frequency energy and, if not installed and used in accordance with the instruction manual, may cause harmful interference to radio communications. Operation of this equipment in a residential area is likely to cause harmful interference in which case the user will be required to correct the interference at his own expense. Changes or modifications not expressly approved by Grass Valley Group can affect emission compliance and could void the user's authority to operate this equipment.

Canadian EMC Notice of Compliance

This digital apparatus does not exceed the Class A limits for radio noise emissions from digital apparatus set out in the Radio Interference Regulations of the Canadian Department of Communications.

Le présent appareil numérique n'emet pas de bruits radioélectriques dépassant les limites applicables aux appareils numeriques de la classe A préscrites dans le Règlement sur le brouillage radioélectrique édicte par le ministère des Communications du Canada.

EN55022 Class A Warning

In a domestic environment, products that comply with Class A may cause radio interference in which case the user may be required to take adequate measures.

Canadian Certified Power Cords

Canadian approval includes the products and power cords appropriate for use in the North America power network. All other power cords supplied are approved for the country of use.

Canadian Certified AC Adapter

Canadian approval includes the AC adapters appropriate for use in the North America power network. All other AC adapters supplied are approved for the country of use.

Laser Compliance

Laser Safety Requirements

The device used in this product is a Class 1 certified laser product. Operating this product outside specifications or altering from its original design may result in hazardous radiation exposure, and may be considered an act of modifying or new manufacturing of a laser product under U.S. regulations contained in 21CFR Chapter 1, subchapter J or CENELEC regulations in HD 482 S1. People performing such an act are required by law to recertify and reidentify this product in accordance with provisions of 21CFR subchapter J for distribution within the U.S.A., and in accordance with CENELEC HD 482 S1 for distribution within countries using the IEC 825 standard.

Laser Safety

Laser safety in the United States is regulated by the Center for Devices and Radiological Health (CDRH). The laser safety regulations are published in the “Laser Product Performance Standard,” Code of Federal Regulation (CFR), Title 21, Subchapter J.

The International Electrotechnical Commission (IEC) Standard 825, “Radiation of Laser Products, Equipment Classification, Requirements and User’s Guide,” governs laser products outside the United States. Europe and member nations of the European Free Trade Association fall under the jurisdiction of the Comite European de Normalization Electrotechnique (CENELEC).

For the CDRH: The radiant power is detected through a 7 mm aperture at a distance of 200 mm from the source focused through a lens with a focal length of 100 mm.

For IEC compliance: The radiant power is detected through a 7 mm aperture at a distance of 100 mm from the source focused through a lens with a focal length of 100 mm.

FCC Emission Limits

This device complies with Part 15 of the FCC Rules. Operation is subject to the following two conditions: (1) This device may not cause harmful interference, and (2) this device must accept any interference received, including interference that may cause undesirable operation. This device has been tested and found to comply with FCC Part 15 Class B limits for a digital device when tested with a representative laser-based fiber optical system that complies with ANSI X3T11 Fiber Channel Standard.

Certifications:

Category	Standard	Designed/tested for compliance with:
Safety	ANSI / UL60950	"Standard for Safety of Information Technology Equipment - Safety - Part 1: General Requirements", (ANSI/UL 60950-1, First Edition, Dated April 1, 2003, with revision through and including November 26, 2003.)
	IEC 60950	"Standard for Safety for Information Technology Equipment - Safety - Part 1: General Requirements", (IEC 60950-1, First Edition, 2001, Corrigendum 1:10-2002)
	CAN/CSA C22.2, No. 60950	"Standard for Safety of Information Technology Equipment - Safety - Part 1: General Requirements", (CAN/CSA-C22.2 No. 60950-1-03. First Edition Dated April 1, 2003, with revisions through and including November 26, 2003)
	EN60950	Safety of Information Technology Equipment, including Electrical Business Equipment.
	73/23/EEC	Low Voltage Directive
EMI	EMC Directive 89/336/EEC via EN 55103-1 and 2	Audio, Video and Entertainment Lighting Control for the European Community.
	EN 55103-1 standards	Electromagnetic compatibility. Product family standard for audio, video, audio-visual and entertainment lighting control apparatus for professional use. Part 1 Emissions, Environment E1/E2 EN 55022: Class A Radiated and Conducted Emissions EN 61000-3-2: Power Line Harmonic Emissions, Radiated Magnetic Field Emissions, Peak Inrush Current
	EN55103-2 standards	Electromagnetic compatibility--Product family standard for audio, video, audio-visual and entertainment lighting control apparatus for professional use. Part 2 Immunity, Environment E1/E2 EN 50082-1: Immunity EN 61000-4-2: Electrostatic Discharge "ESD" Immunity EN 61000-4-3: Radiated RF Electromagnetic Field Immunity EN 61000-4-4: Electrical Fast Transient/Burst "EFT" Immunity EN 61000-4-5: Surge Immunity EN 61000-4-6: Conducted RF Immunity EN 61000-4-11: Voltage Dips, Short Interruptions and Voltage Variations Annex A - Radiated Magnetic Field Immunity Note: This only applies to assemblies sensitive to magnetic fields
	US FCC Class A Canada FCC Industry Canada	CISPR Pub. 22 (1985)
	Australia & New Zealand:	AS/NZS 3548

ESD Protection

Electronics today are more susceptible to electrostatic discharge (ESD) damage than older equipment. Damage to equipment can occur by ESD fields that are smaller than you can feel. Implementing the information in this section will help you protect the investment that you have made in purchasing Grass Valley equipment. This section contains Grass Valley's recommended ESD guidelines that should be followed when handling electrostatic discharge sensitive (ESDS) items. These minimal recommendations are based on the information in the *Sources of ESD and Risks* area. The information in *Grounding Requirements for Personnel* on page 27 is provided to assist you in selecting an appropriate grounding method.

Recommended ESD Guidelines

Follow these guidelines when handling Grass Valley equipment:

- Only trained personnel that are connected to a grounding system should handle ESDS items.
- Do not open any protective bag, box, or special shipping packaging until you have been grounded.

Note When a Personal Grounding strap is unavailable, as an absolute minimum, touch a metal object that is touching the floor (for example, a table, frame, or rack) to discharge any static energy before touching an ESDS item.

- Open the anti-static packaging by slitting any existing adhesive tapes. Do not tear the tapes off.
- Remove the ESDS item by holding it by its edges or by a metal panel.
- Do not touch the components of an ESDS item unless it is absolutely necessary to configure or repair the item.
- Keep the ESDS work area clear of all nonessential items such as coffee cups, pens, wrappers and personal items as these items can discharge static. If you need to set an ESDS item down, place it on an anti-static mat or on the anti-static packaging.

Sources of ESD and Risks

The following information identifies possible sources of electrostatic discharge and can be used to help establish an ESD policy.

Personnel

One of the largest sources of static is personnel. The static can be released from a person's clothing and shoes.

Environment

The environment includes the humidity and floors in a work area. The humidity level must be controlled and should not be allowed to fluctuate over a broad range. Relative humidity (RH) is a major part in determining the level of static that is being generated. For example, at 10% - 20% RH a person walking across a carpeted floor can develop 35kV; yet when the relative humidity is increased to 70% - 80%, the person can only generate 1.5kV.

Static is generated as personnel move (or as equipment is moved) across a floor's surface. Carpeted and waxed vinyl floors contribute to static build up.

Work Surfaces

Painted or vinyl-covered tables, chairs, conveyor belts, racks, carts, anodized surfaces, plexiglass covers, and shelving are all static generators.

Equipment

Any equipment commonly found in an ESD work area, such as solder guns, heat guns, blowers, etc., should be grounded.

Materials

Plastic work holders, foam, plastic tote boxes, pens, packaging containers and other items commonly found at workstations can generate static electricity.

Grounding Requirements for Personnel

The information in this section is provided to assist you in selecting a grounding method. This information is taken from ANSI/ESD S20.20-2007 (Revision of ANSI/ESD S20.20-1999).

Table 1. Product Qualification

Personnel Grounding Technical Requirement	Test Method	Required Limits
Wrist Strap System*	ANSI/ESD S1.1 (Section 5.11)	< 3.5×10^7 ohm
Flooring / Footwear System – Method 1	ANSI/ESD STM97.1	< 3.5×10^7 ohm
Flooring / Footwear System – Method 2 (both required)	ANSI/ESD STM97.1 ANSI/ESD STM97.2	< 10^9 ohm < 100 V

Product qualification is normally conducted during the initial selection of ESD control products and materials. Any of the following methods can be used: product specification review, independent laboratory evaluation, or internal laboratory evaluation.

Table 2. Compliance Verification

Personnel Grounding Technical Requirement	Test Method	Required Limits
Wrist Strap System*	ESD TR53 Wrist Strap Section	< 3.5×10^7 ohm
Flooring / Footwear System – Method 1	ESD TR53 Flooring Section and ESD TR53 Footwear Section	< 3.5×10^7 ohm
Flooring / Footwear System – Method 2 (both required)	ESD TR53 Flooring Section and ESD TR53 Footwear Section	< 1.0×10^9 ohm

* For situations where an ESD garment is used as part of the wrist strap grounding path, the total system resistance, including the person, garment, and grounding cord, must be less than 3.5×10^7 ohm.

Preface

About This Manual

This manual is a part of the Jupiter CM-4400 documentation set (refer to) and provides the hardware installation, software configuration, and operating instructions for the Jupiter CM-4400 Control Module, which only supports the Jupiter AccuSwitch control software. This manual can be accessed through the Jupiter Configuration Editor's Help menu. An electronic version of this manual, as well as the complete documentation set, are also available on the:

- Software and Documentation flash drive provided with this system
- Grass Valley web site

Standard Documentation

The standard documentation set comprises:

- Jupiter CM-4400 AccuSwitch Control System Release Notes 071827515
- Jupiter CM-4400 AccuSwitch Control System Installation and Operation Manual for version 8.0.0. 071876602
- JEP Series Jupiter/Encore Control Panels Installation Manual 071837202
- Jupiter AccuSwitch Soft Panels and Visual Status Display Instruction Manual.
- Jupiter Control System L-S and LCD Series Control Panels Release Notes.
- Jupiter Control System L-S and LCD Series Control Panels Installation and Operating Manual.

Note The documentation set is also available on the Grass Valley web site.

Other Documentation

For any peripheral component information, refer to the that manufacturer's respective support documentation.

Section 1

Introduction

Overview

The CM-4400 Jupiter Control Module (CM) is designed to control Grass Valley Routing switchers, specific third party routers, and certain other RS-422 devices. The devices to be operated are connected to the CM-4400, which is in turn connected to Jupiter control panels. The CM-4400 is configured using the Jupiter file server (Figure 3 on page 33).

Note Sony machine control is not supported by Jupiter AccuSwitch control software.

This manual is for the CM-4400, which only supports the Jupiter AccuSwitch control software. For all other systems, including the CM-4000 System Controller, you should refer to that system's manual. See head

CM-4400 System Controller

The CM-4400 System Controller (Figure 1 and Figure 2 on page 32) provides a hardware platform for the Jupiter AccuSwitch application.

The AccuSwitch application, when connected to and operated by a suitable automation system, allows deterministic switching of a Crosspoint Bus Routing switcher.

Figure 1. CM-4400 Control Module-Rear

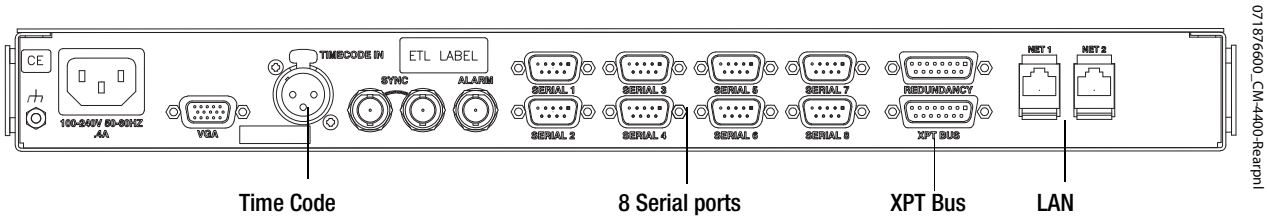

071876600_CM-4400-Rearpnl

Note Connect the Ethernet cable to the NET 1 port only. NET 2 is for future use.

Figure 2. CM-4400 Control Module-Front

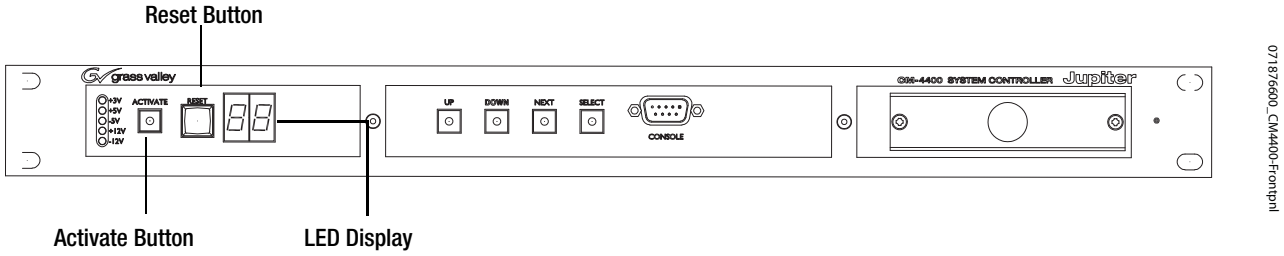

CM-4400 Jupiter AccuSwitch Control System

The Jupiter AccuSwitch Control System allows you to configure and control routers, control panels, and diverse connected equipment.

The Jupiter control system includes:

- CM-4400 system controllers (Primary and Secondary (Redundant) controllers)
- Jupiter AccuSwitch Control software (7.6 or newer)
- File Server PC (Grass Valley or customer supplied)
- Control Panels (either Hardware or Software)
- Jupiter LAN
- Other various options

The Jupiter LAN must be a standalone, isolated network. No other equipment should be connected to, or communicating on, the Jupiter LAN.

An example of the Jupiter Control system is shown in Figure 3 on page 33.

Figure 3. Example Jupiter System

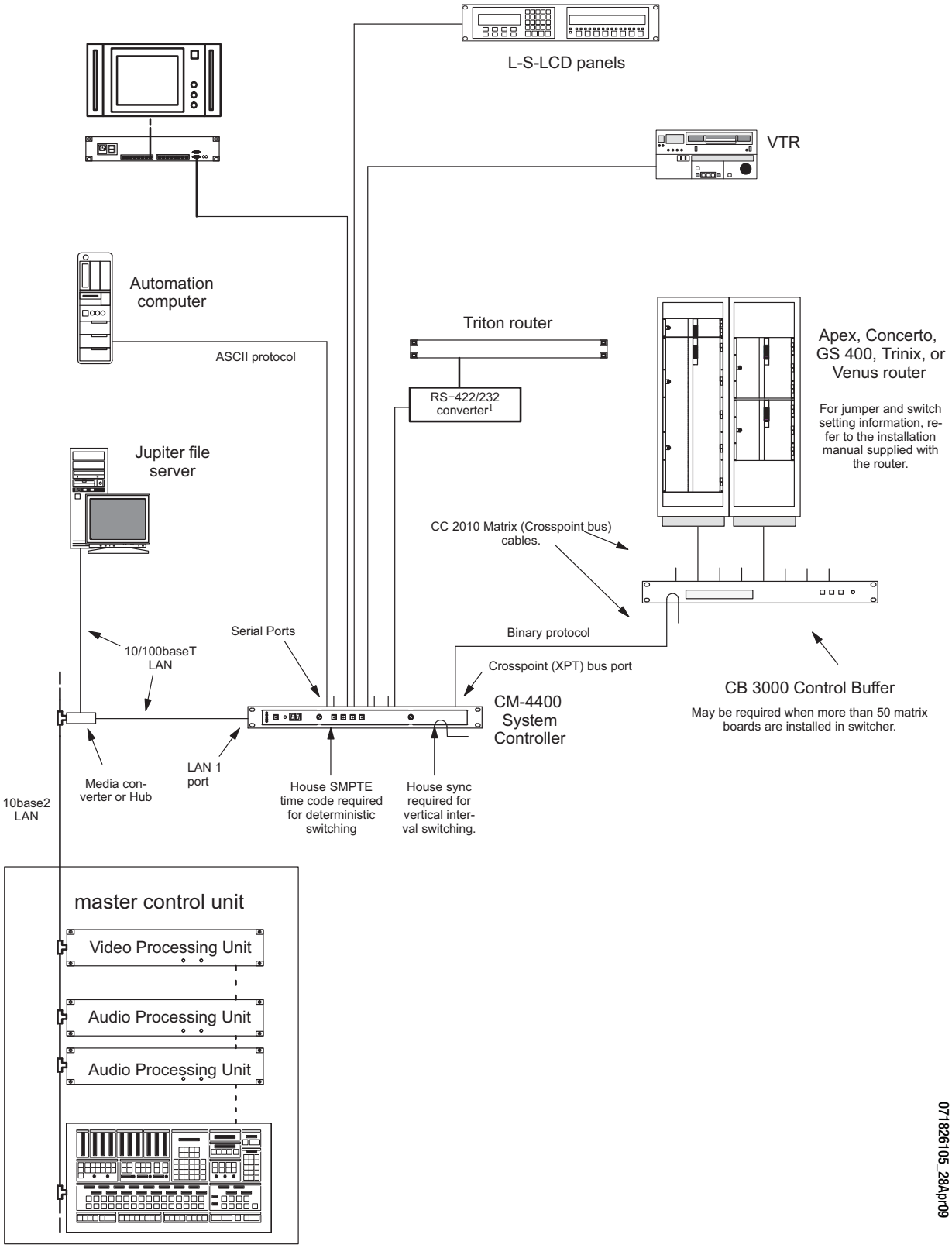

071826105_28Apr09

Control Functions

Distribution Routing Switcher Control

Grass Valley Routing switchers that can be controlled by the CM-4400 include Trinix, Apex, Concerto, and Venus. The crosspoint bus on the Routing switcher is connected to a CM-4400. This CM-4400 is connected to the Jupiter file server.

Note The Triton line of routers and some third-party routers can be controlled using a serial connection.

Path Finding Option

The Path finding option provides you with the means to communicate between video routing switchers (“routers”), including automatic standards conversion when switching between analog and digital routers.

Path finding is only an option for video routers; Path finding for data routers is not supported.

Remote (Serial Control) Routing switcher Interface Option

The CM-4400 can optionally support several third-party matrix Routing switcher protocols. Multiple routers with different protocols can be mixed in one system if preferred. For a list of supported remote routers, please contact your Sales representative.

External Control Protocols

These protocols can be used by external computers and Automation systems to send switch messages into the Jupiter Control System. Each device will use one serial port on the CM-4400.

The CM-4400 supports the following protocols:

- Alpha Image
- Data Tek
- GVG Native
- Nexus
- Pro-bel Eclipse
- Utah 96
- EScontrol
- Utah 12
- Nexus Star
- GVG Horizon

Please contact Grass Valley's Technical support for more information (see *Contacting Grass Valley* on page 4).

Control Panels

The JEP-100, L-S, and LCD panels are available for use with the AccuSwitch application. For more information about these panels, see the associated manuals (*JEP-100 Jupiter / Encore Control Panel v1.2.0 Installation and Operating Manual*, *Jupiter Control System L-S and LCD Series Control Panels Installation and Operating Manual*.)

Software Control Panels (GUI Control Panel)

The Software Control Panel Suite that is shown in the JNS Applications group is not supported by Jupiter AccuSwitch. The GUI panels that are supported by AccuSwitch are described in the *Jupiter AccuSwitch Soft Panels and Visual Status Display Instruction Manual*.

File Server (Configuration PC)

When the AccuSwitch system is started, program information is downloaded from the file server to the control processors. Field upgrades and modifications can thus be made through this single station.

To avoid compatibility issues due to evolving software requirements, the use of a customer-supplied computer is discouraged. If circumstances require a customer-supplied computer, see *File Server Minimum Specifications* on page 279.

System Logger

The System logger provides you with system status display in a window on the Jupiter file server or Jupiter remote PC.

Jupiter Configurator Editor

Microsoft Windows-style menus are used to configure the various components of the system. For example, these menus are used to set the individual buses of the CM-4400 to MPK, or other protocols as needed.

Ordering Information

Contact your sales representative when ordering CM-4400 parts.

Section 2

Hardware Installation

Unpacking and Inspection

Before unpacking the equipment, inspect the shipping carton for evidence of freight damage. Notify the carrier and Grass Valley if the contents have been damaged. Retain all shipping cartons and padding material for inspection by the carrier.

Do NOT return damaged merchandise to Grass Valley until an appropriate claim has been filed with the carrier and a material return authorization number has been received from Grass Valley.

Note If your Jupiter equipment was purchased from Grass Valley as a "turnkey" system, you may wish to refer to the Jupiter Getting Started Guide. This booklet provides an abbreviated version of the information in this section and is available on Grass Valley's Web site.

Verifying 110 or 230 VAC Selection

Most panels are auto sensing; otherwise, power line adjustments are normally made at the factory, based on the geographical location of the customer's facility. However, verifying these settings before applying power is a good practice.

Verify that the File server has the correct mains voltage setting. The minimum specifications for the File server can be found in *File Server Minimum Specifications* on page 279.

Rack Mounting

Grass Valley recommends that each CM-4400 be installed close to the devices that it will control, which will reduce system cabling. An example system diagram is shown in Figure 4 on page 38.

Figure 4. Jupiter AccuSwitch application - Connection to Crosspoint Bus Routing Switcher

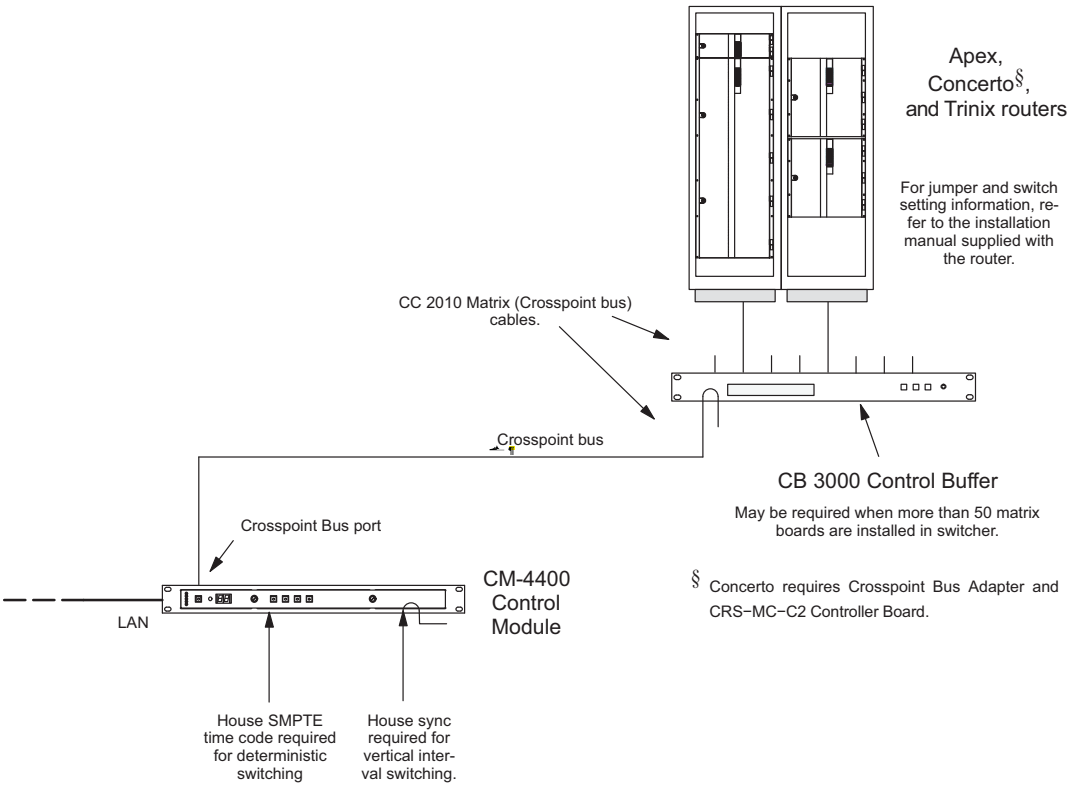

Follow these steps to install the CM-4400 in a rack:

1. Position the CM-4400 on the rack close to the devices that it will control.

Note Grass Valley recommends that a second person help hold the control module (CM) in place while it is secured to the frame.

2. Install the screws into the Rack-Mounting holes on the front of the CM-4400.

   Do not block the CM-4400's ventilation openings on both sides of the CM. If necessary, rack mount support must be cut shorter to avoid blocking the airflow. The chassis fan and ventilation openings are shown in Figure 5 on page 39.

Figure 5. CM-4400 Ventilation Openings

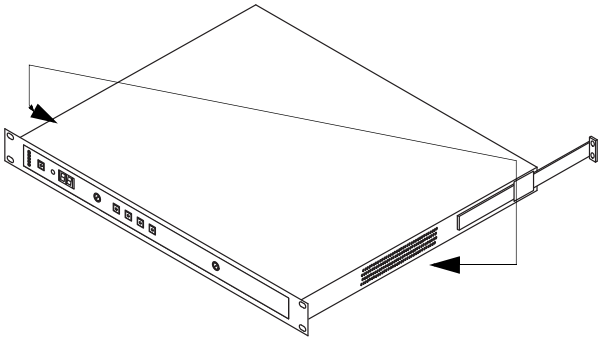

Connecting the CM-4400 to the Jupiter LAN

The Routers, Control Panels, and PC's that comprise the Jupiter Control System communicate through the CM-4400 on the Jupiter LAN. The IP address that is defined as the Base IP is assigned to the first controller in the system when loading the Jupiter Control Software. The other CM-4400s are assigned their IP addresses by automatically incrementing addresses following the first controller's address.

CM-4400 Connections

This section describes the connections on the rear panel of the CM-4400.

Figure 6. CM-4400 Connections

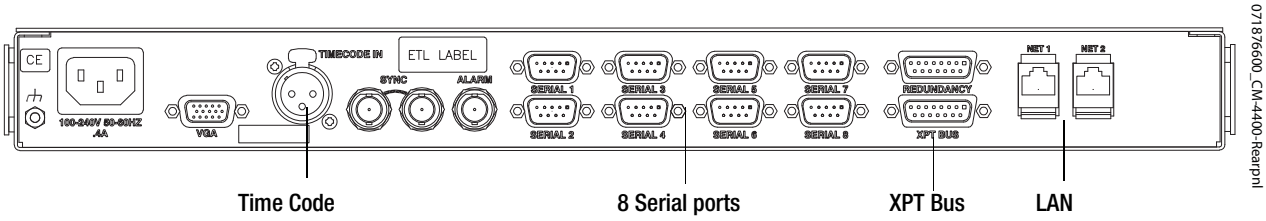

Follow these steps to connect the System controller to the routers:

1. Connect the Crosspoint Bus cable to the XPT BUS connector on the rear of the CM-4400 controller and the other end to either the BOP-4000, one of the XPT BUS connector on the rear of the Routing switcher, or the CB 3000. (Figure 6)
2. Connect the redundant CM-4400 if needed.

Note When adding up all XPT Bus cable segments, the approximate maximum length is 50 feet. There is also a load limit for how many connections that can be on one bus. See *CM-4400 Serial Bus Loading* on page 281 for more information,

Jupiter File Server Connection

The Jupiter File Server PC must be on the local Jupiter LAN and running Windows XP Professional with at least Service Pack 2 or Windows 7 Professional. Grass Valley recommends that the Jupiter File server be a separate computer that is dedicated for Jupiter. All firewall applications must be disabled for the Jupiter File server; this includes the Windows Firewall application and any firewalls that are associated with anti-virus programs. For your own protection, DO NOT allow the Internet to be accessed from this computer.

1. Connect the PC that will serve as the Jupiter File Server to the Ethernet switch. Use a network cable for this connection.
2. Install Grass Valley's NetConfig program on the Jupiter File Server. NetConfig is used for L-S-LCD control panels, Trinix, and Concerto.

Ethernet Switch to System Controller Connection

An Ethernet switch must be part of the Jupiter LAN. The hardware Control Panels and CM-4400 will be connected to this switch. Use a network cable (either CAT 5 or CAT6) for these connections. Ethernet switches can be daisy chained for added expansion.

Note Connect the Ethernet cable to the CM-4400's NET 1 port only. NET 2 is for future use.

Follow these steps to connect the Ethernet switch to the CM-4400:

1. Connect an Ethernet switch to the Jupiter LAN to which the CM-4400 is connected.
2. Connect the Ethernet cable to the CM-4400's NET 1 port. Connect the other end of the cable to the switch.
3. Connect the AccuSwitch Control panels to that same switch by connecting the network cable to the NET 1 port on the rear of S, L & LCD series Control panels.

Note Do not use the Dynex DX-ESW8 - 10/100M Fast Ethernet switch.

Configuring AccuSwitch Control Panel Connections

Grass Valley's NetConfig application will identify the hardware panels in the system and allow the operator to program them accordingly. Before configuring the Panels, you must have the following information:

- The IP address
- The Subnet
- The Gateway (if located on another subnet, or being used across a WAN)
- The Unique Device ID
- The IP address of the Primary and Secondary (Redundant) System Controllers

Follow these steps to configure the AccuSwitch Control panels:

1. Start the NetConfig program and navigate to the AccuSwitch Control panels using the Device View selection in the Navigation panel on the left side of the NetConfig application.
   a. You may not be able to browse to the panel if the current IP address of the panel is not part of the Jupiter Subnet. NetConfig can be used to set the IP address first if this is the case.
2. Select the Panel Network hyperlink. The Panel Network Configuration page will then appear (Figure 7).

Figure 7. Panel Network Configuration - IP Settings

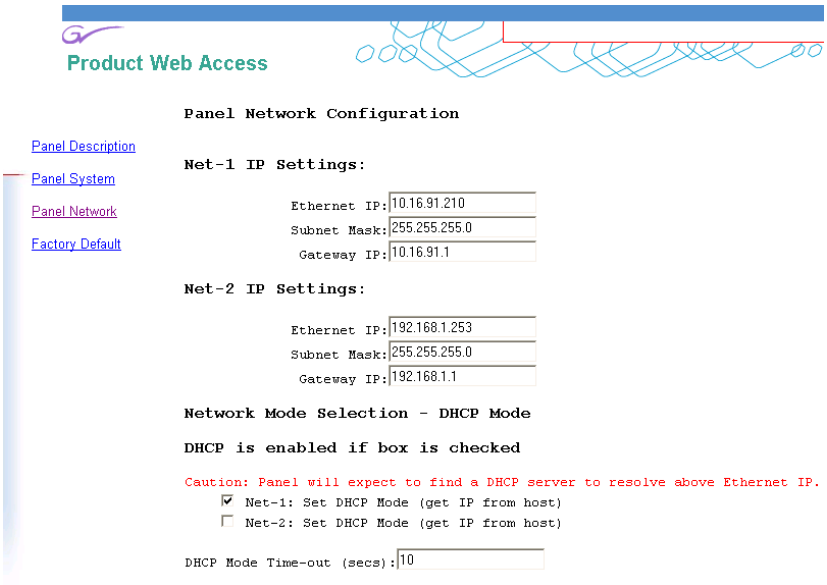

3. Enter a unique IP address in the *Ethernet IP* field. This IP address should be within the same network as the CM-4400.

   For example, if the CM-4400 address is 10.16.91.10, the L-S or LCD Panels address should be changed to reside in the 10.16.91.xx network (such as "10.16.91.210" as shown in Figure 8).

4. Enter 255.255.255.0 in the *Subnet Mask* field.

5. Enter a unique value in the *Gateway* field. See your network administrator for this IP address.

Note If the L-S or LCD Panels and the CM-4400 are on separate networks, the gateway connecting them must be specified.

Connection Type

Follow these steps to select the Connection type:

1. Scroll the Panel Network Configuration down to the Connection Type: section (Figure 8).

Figure 8. Panel Network Configuration - Connection Type

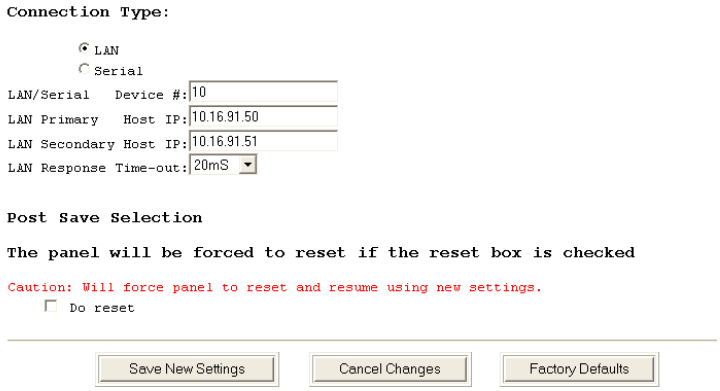

2. Select the **LAN** radio button for a LAN only system.

3. Enter the Device number in the *LAN/Serial Device* # field. This number must match the *Device Address* field in the MPK Devices table (see *MPK Devices Table* on page 190 for more information).

4. Enter the IP address of the Primary host in the *LAN Primary Host IP* field.

5. Enter the IP address of the Secondary (Redundant) host in the *LAN Secondary Host IP* field.

6. Select the amount of time to wait for a response from the Control module before timing out from the LAN Response Time-out drop-down list. Grass Valley recommends using the default setting.

This setting is helpful if you have Control panels located a long distance away from a Control module. The options are: 20mS, 40mS, 60mS, 80mS, 100mS, 250mS, 500mS, and 1S.

Note For control panels that are connected using a Serial connection, see the appropriate panel manual.

Additional Connections

The following connections are optional. Grass Valley offers the Basic XY or Multi-Level XY soft panels, which allow local or remote control of the Jupiter system. You can also connect a Master control system or a CB 300. For more information about the CB 300, see *CB 3000 Control Buffer* on page 73.

1. Install the Software Control panels on a PC. Each Software Control panel needs the connection information listed above in *Configuring AccuSwitch Control Panel Connections* on page 41. However, this information is entered in the soft panel's Router Connection Editor dialog (see the *Jupiter AccuSwitch Soft Panels and Status Display manual)*.
2. If your system includes a Master control system, connect the Master control to either a serial port or to the Jupiter LAN. Follow the configuration instructions for the Master Control system, which can be found in the control system's installation manual.

CM-4400 Control System Protection Features

The CM-4400 has many features that are for your protection. These features include:

- Alarms
  - Single CM-4400
  - Redundant CM-4400
- Redundant Units

Alarm Modes

The CM-4400's alarm system will start in the following conditions:

- The main CPU (or a main CPU task) is not operating properly.
- The power supply is not operating properly.
- The unit is in the process of rebooting.

The master alarm condition is indicated by either a “00,” “01,” or “FF” on the front panel’s LED display, and at the rear panel’s Alarm BNC connector (Figure 3 on page 33). For more information alarm conditions, see *Error Codes* on page 259.

Control Module Alarm Circuit

Electrically, the Alarm BNC operates according to the SMPTE standard 269M-1999. When an alarm is asserted, the circuit associated with the Alarm connector will present low impedance to an external current source circuit provided by the customer. Figure 9 shows the CM-4400 alarm circuit (left) and an example of a customer-supplied indicator circuit (right).

Figure 9. CM-4400 Alarm Circuit

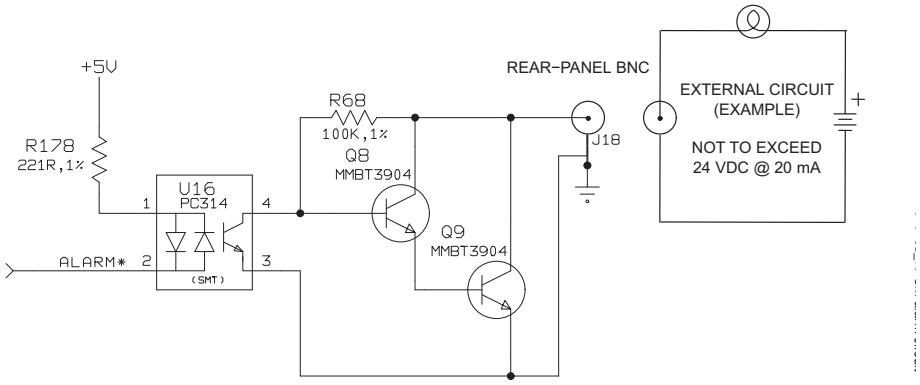

Alarms in a Single CM-4400 Installation

If the master alarm is asserted by the main CPU watchdog timer (and assuming that the power supply is operating properly), the CM-4400 will be rebooted automatically.

Alarms in a Redundant CM-4400 Installation

For additional protection, a redundant CM-4400 can be installed. The redundant CM-4400 will monitor the master CM-4400.

If a master alarm condition is detected in the master unit, control will be switched to the redundant CM-4400 automatically. The switch over to the redundant unit will occur almost immediately after the alarm, thus providing minimal disruption to the control system. The controlling CM-4400 is indicated by a green light on the CM **Activate** button (see Figure 2 on page 32).

Note The lights in the push-button switches on the front panel of the CM-4400s manufactured in 2011 have amber lights instead of green lights.

If the redundant CM-4400 is controlling the system and enters an alarm condition and then reboots:

- The redundant CM-4400 will retain control if the master has not recovered.
- The master CM-4400 will assume control if the master has recovered from an earlier automatic reboot.

Redundant Units

Protection can be further enhanced by maintaining a third Control Module (CM) as a replacement or stand-by unit (See Figure 10). Should the master fail, the redundant CM-4400 would assume control; the third CM-4400 would then be installed on the network and the failed master removed. Control could then be manually switched to the new master. This process would allow repair of the failed unit with no interruption in service.

Note When using a redundant system, the CMs must be the same type. That is, both CMs must be a CM-4400.

Figure 10. Reserved CM-4400 Ready to Swap with a Failed CM

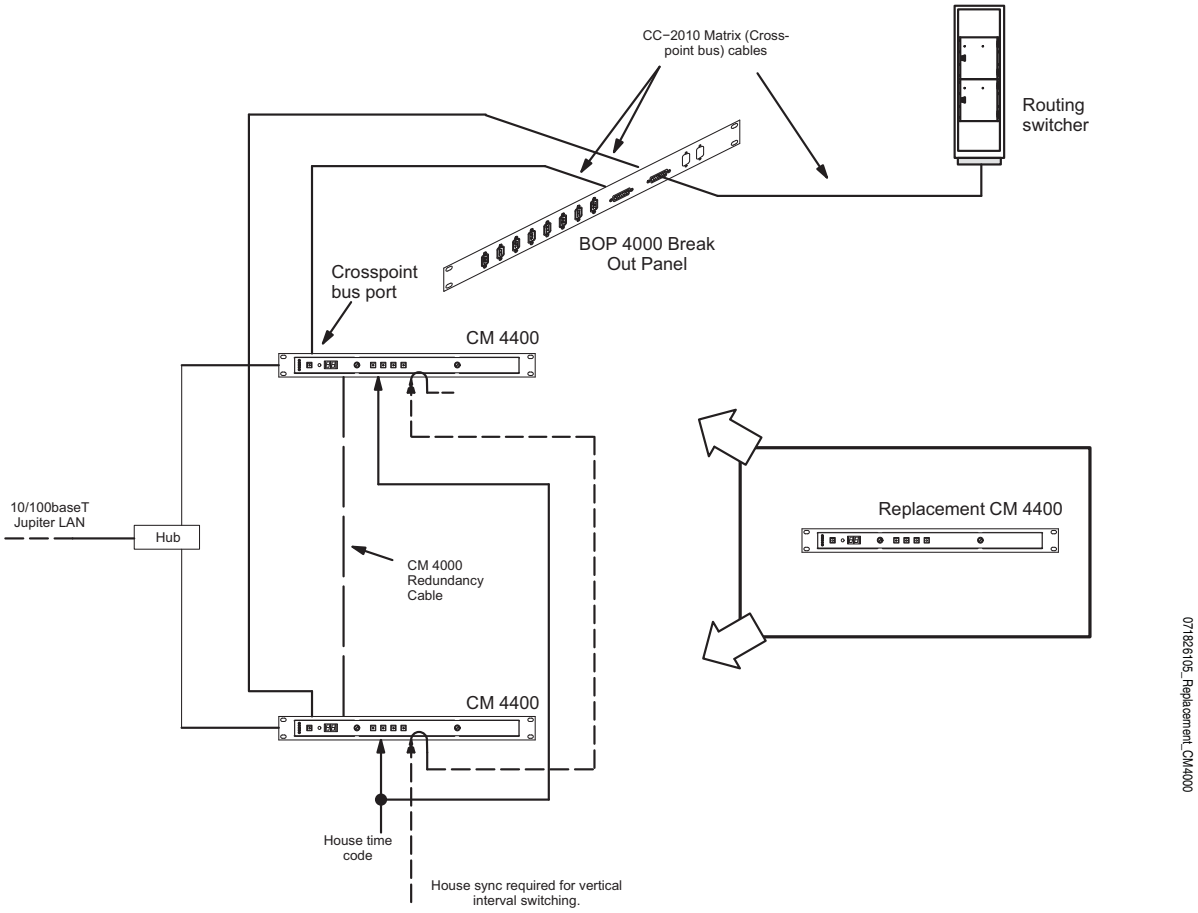

A fault condition is indicated by a “00,” “01,” or “FF” indication on the front panel LED display, or, in the case of a failed power supply, no illuminated lamps.

Routing switcher control should have been switched to the other CM. Verify that control has switched by looking for the green, or amber, Activate lamp.

Manually Switching A CM-4400

To manually change the operation from the master CM-4400 to the redundant CM, press the **Activate** button on the front panel of the redundant CM.

To return operation to the master CM, press the **Activate** button on the master CM.

Replacing a Failed Unit

Follow these steps to replace the failed unit:

1. Switch control manually to the good unit by pressing the **Activate** button if necessary.

Figure 11. The Activation Button on a Failed Control Module

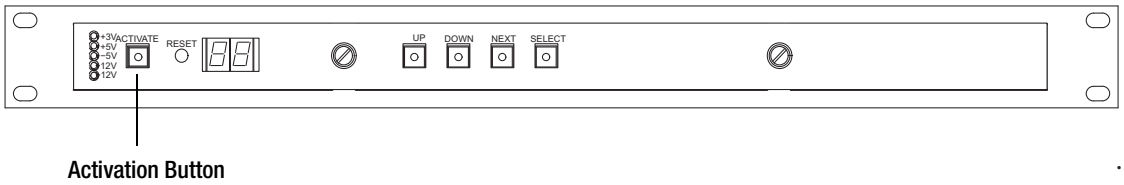

2. Unplug the faulty CM-4400.
3. Install, connect, and power up the replacement CM-4400. The replacement CM-4400 will boot up automatically. The other CM-4400 should remain active throughout this operation.
4. Change the replacement CM-4400’s physical Ethernet address (MAC address) in the Network Description table:
   a. Start the Jupiter Configuration Editor.
   b. Select the Network Description table (Jupiter> Network Description).
   c. Select either the Address or the Redundant Address field for the appropriate board.
5. Save your changes and then validate, compile, and activate the configuration set.

6. Confirm that the system is still operating normally by using a Jupiter control panel. Ensure that the status of all crosspoints on the switcher is reported on the panel.

Verifying the Replaced Unit Ready for Use

Follow these steps to verify that the replacement unit is ready for use:

1. Start the Jupiter Network Suite, if it is not already running.
   a. Click the **JNS Server** button on the top of the JNS Control Console. The JNS Server screen will then appear. The words "Not Connected" will be displayed in the red connection indicator next to the **Connect** button.
   b. Click the **Connect** button.
2. Select the **Control Center** button (JNS Applications > Control Center). The Control Center window will then appear.
3. Click the Bootp Tab and check that the correct MAC address is being used for the replacement CM-4400.
   a. Go to the TFTP Status tab and look for an indication that the transfer was successful ("100% complete"). Proceed with the steps if these indications are correct.
4. Swap control to the replacement CM-4400 by pressing the **Activate** button on the front of the CM-4400 (Figure 3 on page 33).
5. Confirm system operation. Assuming all is well leave the replacement CM-4400 in control of the system.

The installation of the replacement CM-4400 is now complete.

Correcting Problems with the Replacement

Follow these steps if you encounter any problems:

1. Return the control immediately to the non-replacement CM-4400.
2. Unplug the replacement CM-4400
3. Check all cabling, and reapply power. It may be necessary to download a new configuration set if these steps fail to eliminate the fault. See *Validate, Compile, and Activate (Downloading) Configuration Set* on page 135 for more information.

If problems persist, contact Grass Valley Technical Support (see *Contacting Grass Valley* on page 4).

Installing Redundant CM-4400 Control Modules

In a Redundant CM-4400 system, the redundancy cable between the units is marked “Master” on one end; whichever Control module is connected to this end of the cable is always the master unit.

The wiring for a redundant CM-4400 system is shown in Figure 12. The BOP 4000 Break Out Panel is designed to be mounted in the back of an equipment rack, behind the redundant CMs.

Figure 12. Redundant CM-4400 Installation

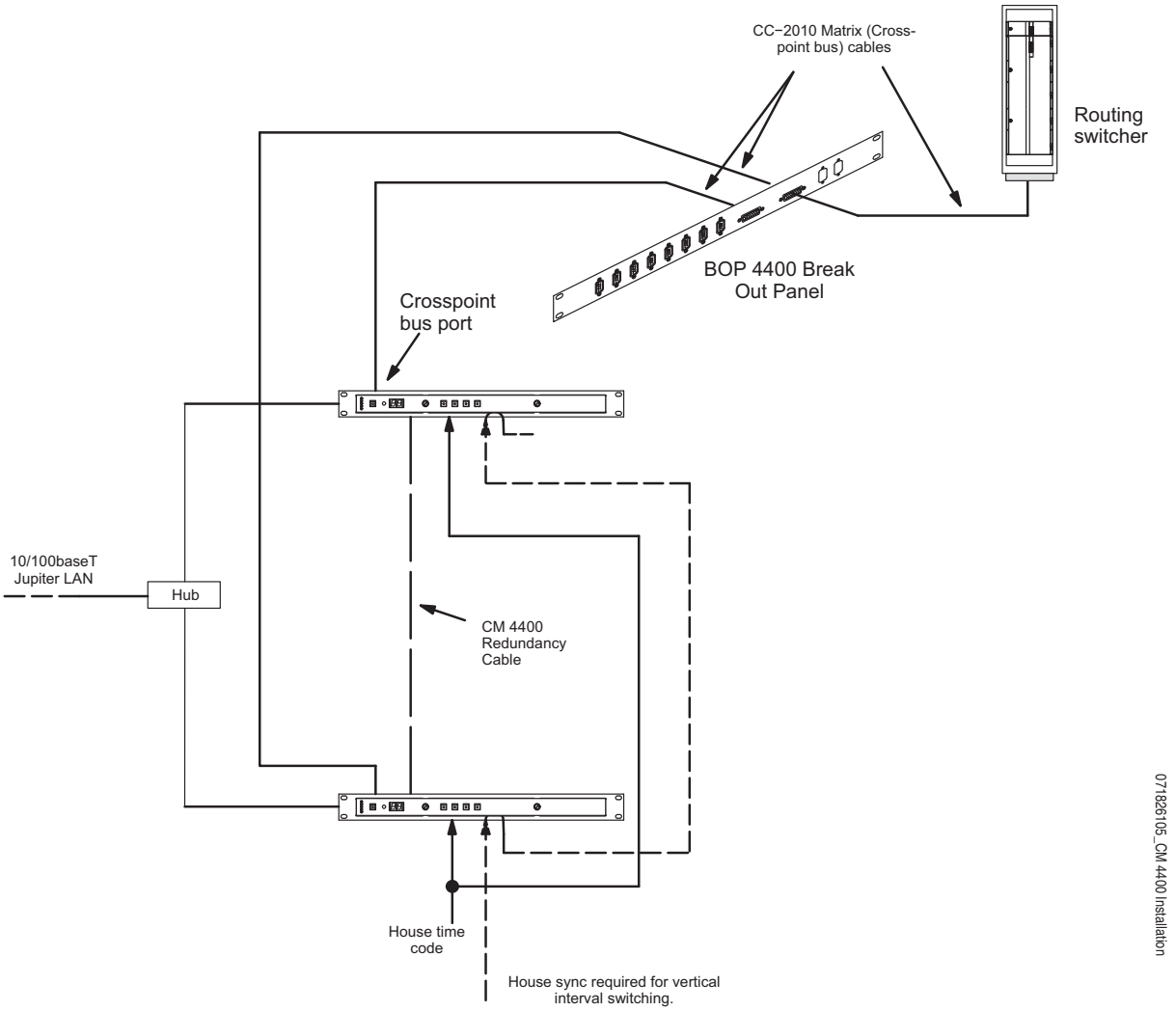

Figure 13. BOP 4000 and Cables. Assembly no. F7-029500-104

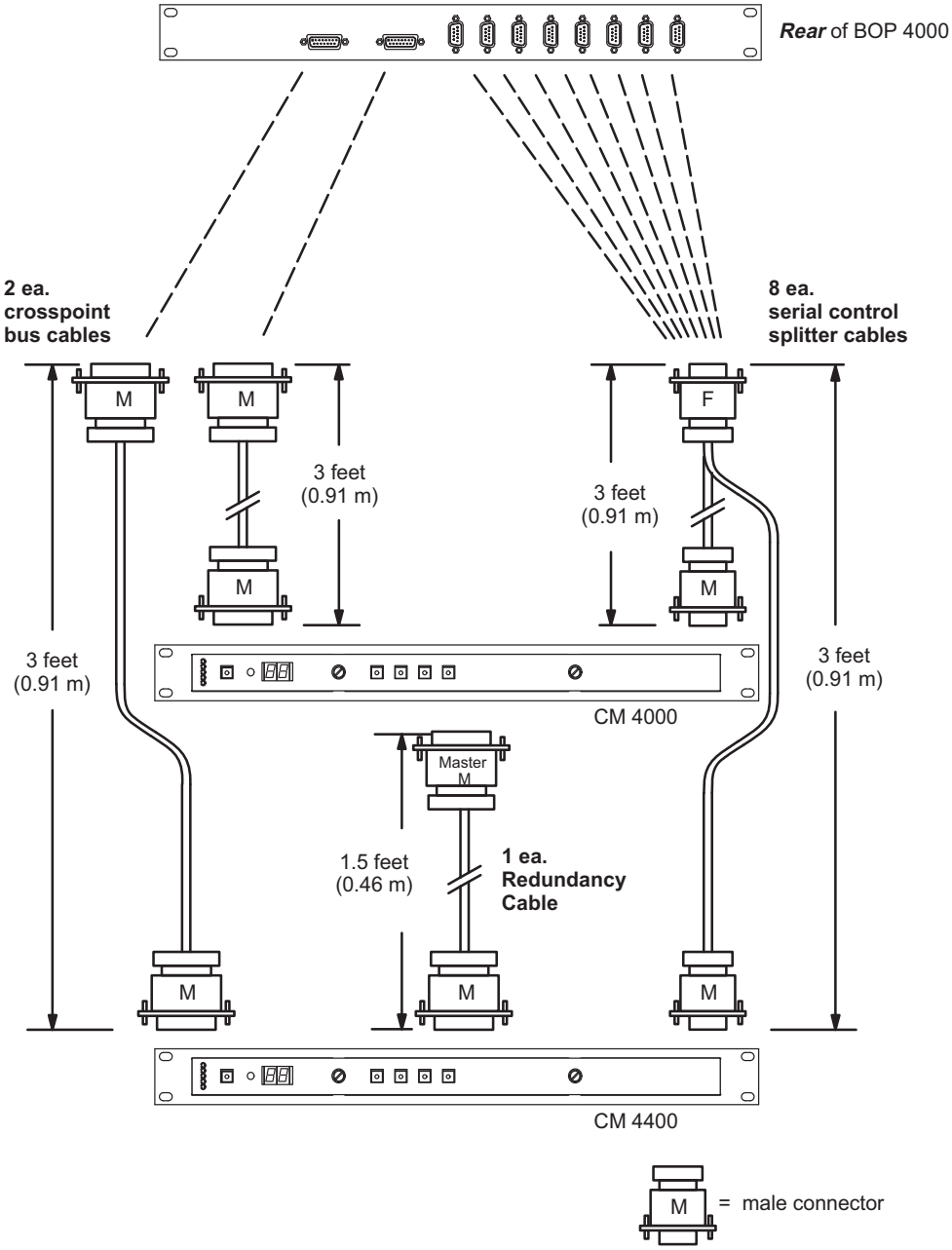

Figure 14. Assembly, CM-4400 Redundancy Cable

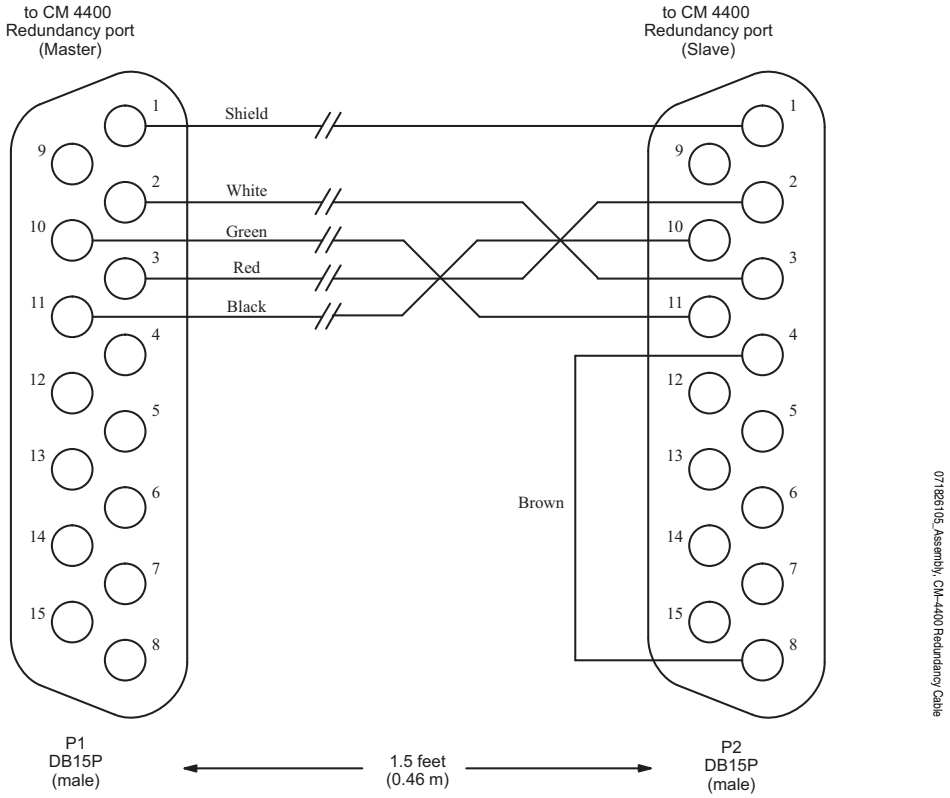

Connecting to Serial Controlled Routers

The CM-4400 System Controller can be used to control certain non-Crosspoint Bus switchers using serial interface ports (Figure 15). Control of some of these routers is an extra-cost option; such routers are referred to as "remote" routers.

Figure 15. Connection to Serial Control Routers

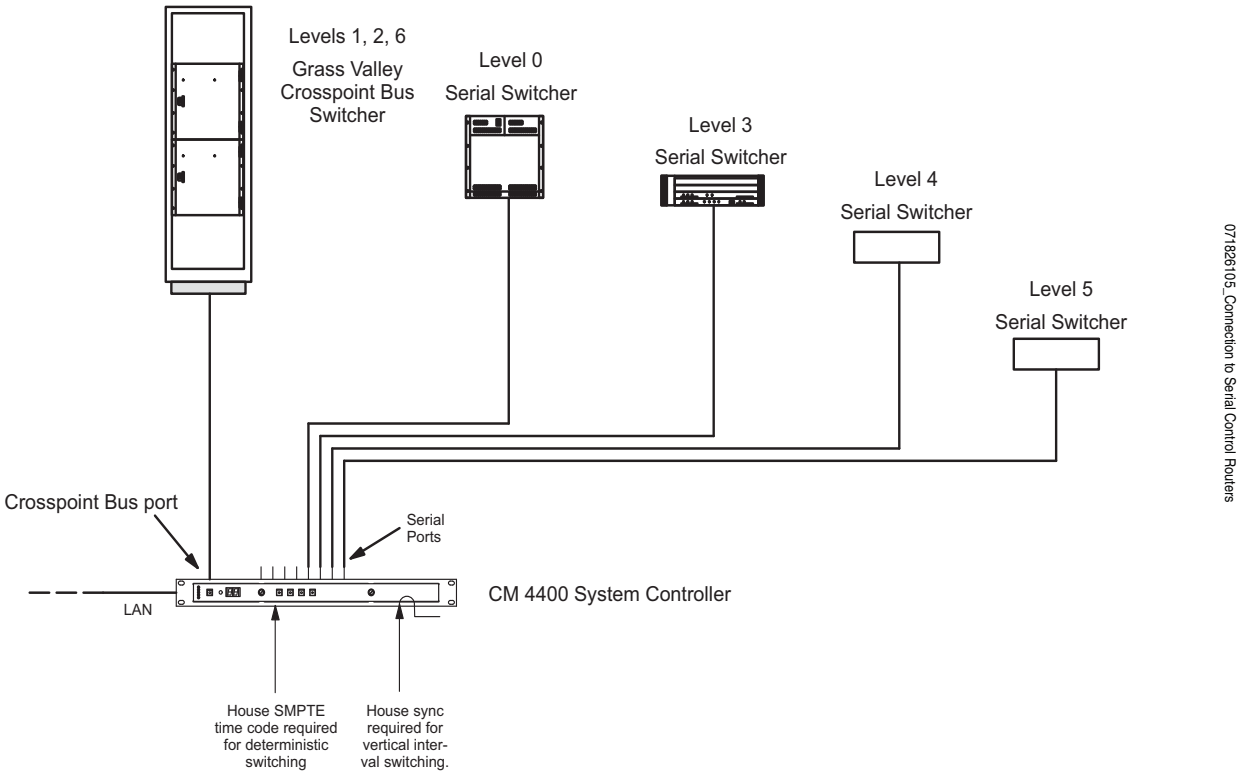

A single CM-4400 can be used to operate one or more switchers through the Crosspoint Bus, while operating up to four separate "serial" switchers through the serial ports.

Please note the restrictions for this application shown in Figure 16.

Vertical interval switching of a switcher connected to a CM-4400 serial port depends on the sync system of the switcher itself. Sync connections to the CM-4400 have no effect on the operation of the serial switcher.

The CM-4400 must be configured using the following tables (see *Configurator Application* on page 109 for more information):

- Network Description table (page 151);
- Serial Protocol table (page 153),
- Switcher Description table (page 157).

Please refer to Figure 16 for details concerning each switcher type. The Installation manual that is supplied with the routing switcher should also be checked for port configuration instructions.

Figure 16. Serial-Control Switcher Restrictions

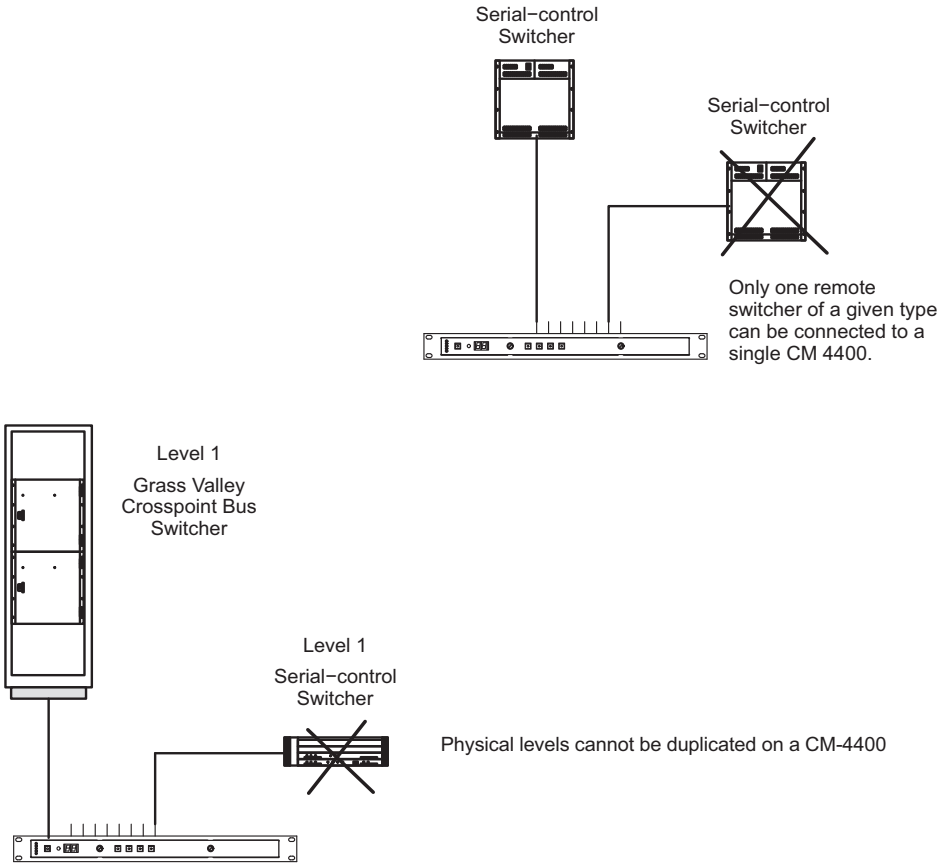

In the highlighted example in Figure 16, Physical levels cannot be duplicated on a CM-4400 unless Logical Level Mapping or an offset of 400 is used or a level offset. ESControl uses 400 for the offset but other protocols use 100, 200, and so forth.

Jupiter Control of Encore

The CM-4400 can send switching commands to a Grass Valley Encore control system. Encore can then send commands to a Routing switcher.

The serial ports on the back of the Encore System Controller Board (SCB) use RJ45 connectors; the port selected for the CM-4400 connection must be configured for RS-422 operation with an internal jumper. For more information about the SCB ports, refer to the *Encore installation and user* manuals.

Non-Redundant Installation

Figure 17. Connecting to a Non-Redundant Encore Control System

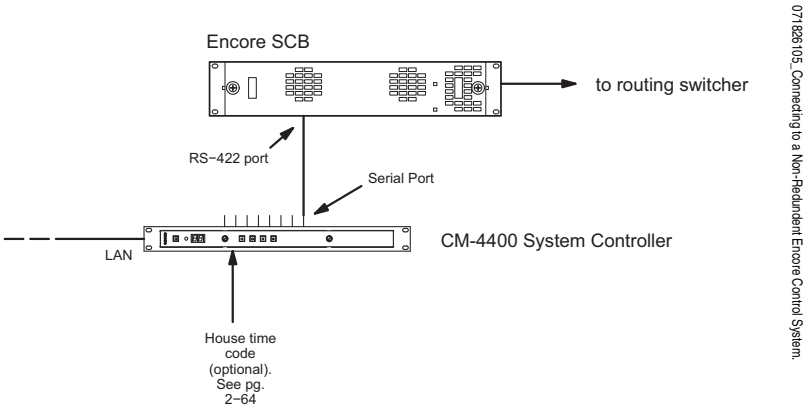

Cabling

A Grass Valley Cat5 cable kit is available in two versions:

- If the SCB is the old style (071 0884 xx series), order kit 174 8216 xx.
- If the SCB is the new style (071 1000 xx series), order kit 174 8217 xx.

The factory cable must be used with a customer-supplied adapter that must be wired as shown in Figure 18. The factory cable is eight inches long. A customer-supplied standard Cat5 cable (and coupler) can be added if needed. Further instructions are provided with the cable kit.

Figure 18. Factory-Supplied Encore/Jupiter Serial Cable and Customer-Supplied Items

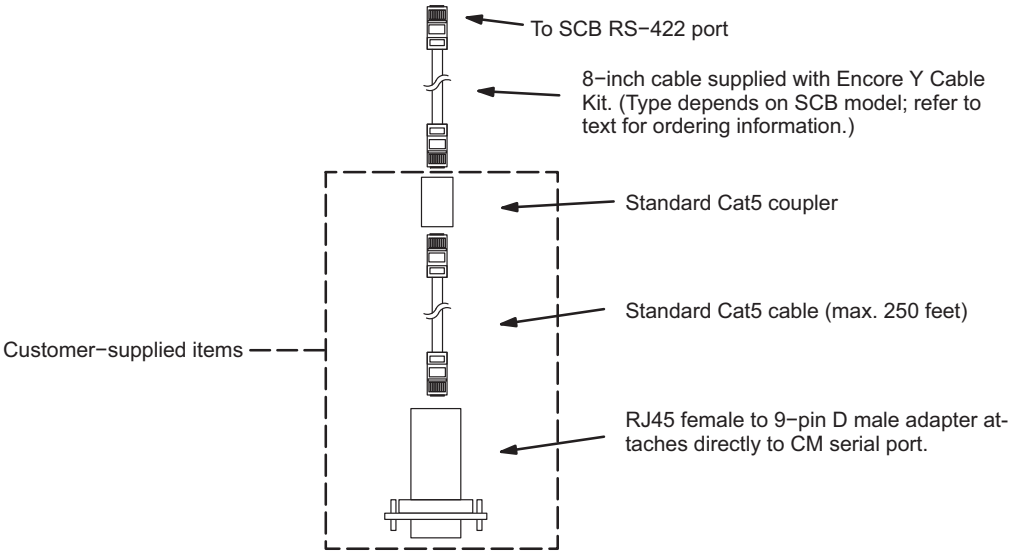

The following figures are for those who wish to prepare their own cables:

- If the SCB is the old style (071 0884 xx series), build the cable as shown in Figure 19.
- If the SCB is the new style (071 1000 xx), build the cable as shown in Figure 20. (No adapter is needed when the cable is custom built).

Figure 19. Customer-Supplied Cable for Connecting CM-4400 to Old-Style Encore SCB

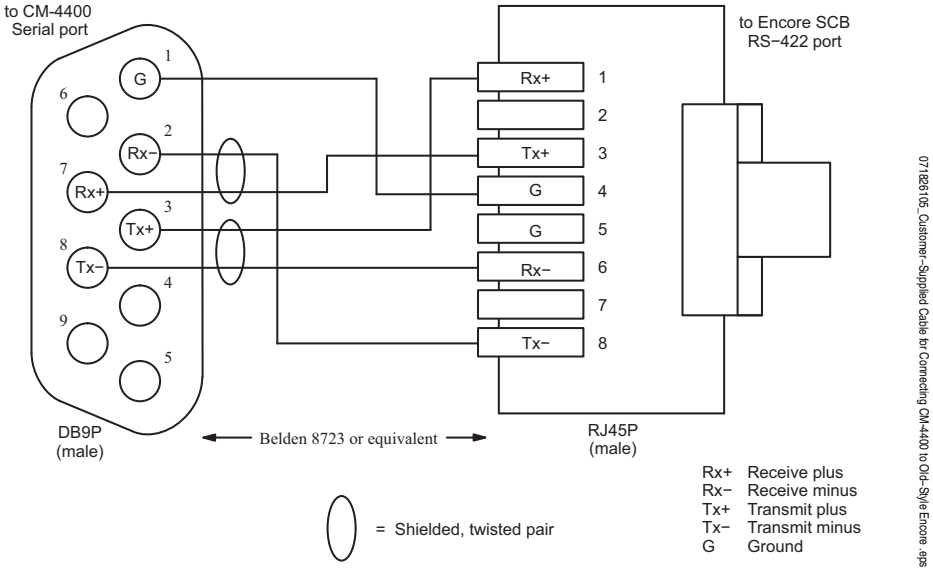

Figure 20. Customer-Supplied Cable for Connecting CM-4400 to New-style Encore SCB

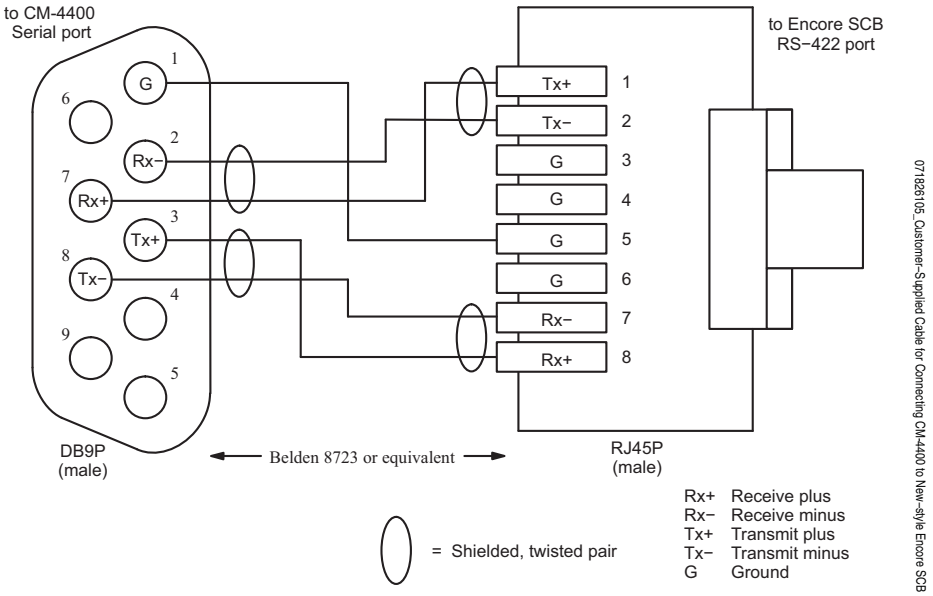

Software Configuration

The CM-4400 connected to the Encore must be configured using the Network Description table (page 151) and Serial Protocol table (page 153). The Serial protocol default setting is: GNP (Grass Valley Native Protocol), 9600 baud when Jupiter is controlling Encore (Figure 21). The Baud rate can be changed as long as both the Encore and CM-4400 configurations match.

Figure 21. Jupiter Controlling Encore - Serial Protocol Table

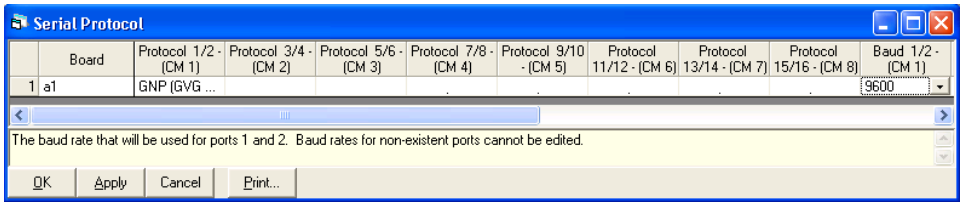

A Routing switcher must be defined using the Switcher Description table (page 157). Including, switcher inputs, outputs, a CP Level Set, and CP Input/Output Sets must be defined.

Note If Encore is controlling Jupiter, different software settings are required, see *Encore Control of Jupiter* on page 61.

Redundant Installation

Some Encore systems may be equipped with redundant System Controller Boards (SCBs). In this case, the recommended arrangement is to install a redundant CM-4400 and connect the CMs to the SCBs with a BOP 4000 Break Out Panel. See Figure 22. Details of the Encore connection are presented below.

Figure 22. Connection to Redundant Encore Control System

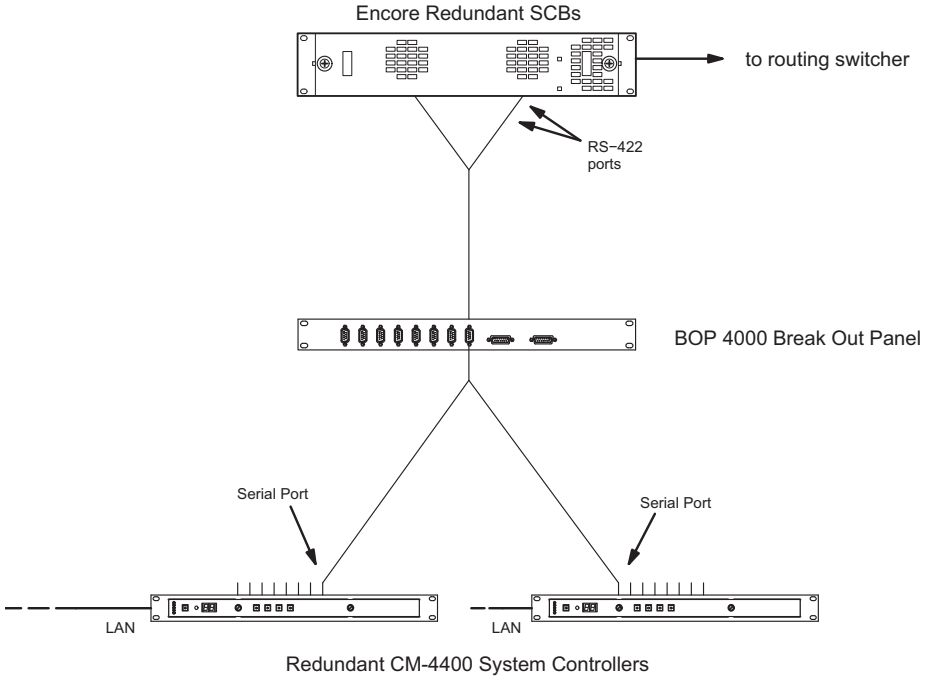

Double-Y Cable

A Grass Valley Cat5 cable kit is available in two versions:

- If the System Controller Board (SCB) is the old style (071 0884 xx series), order kit 174 8216 xx.
- If the SCB is the new style (071 1000 xx series), order kit 174 8217 xx.

The factory cable must be used with a customer-supplied adapter, wired as shown in Figure 20 on page 54. Note that the cables in this kit are eight inches long. Further instructions are provided with the cable kit.

The rack mount BOP 4000 Break Out Panel / cable kit is available for making Y connections to redundant CMs. For more information, see *Alarms in a Redundant CM-4400 Installation* on page 44 and Figure 23.

Figure 23. Y Connections to Redundant CMs

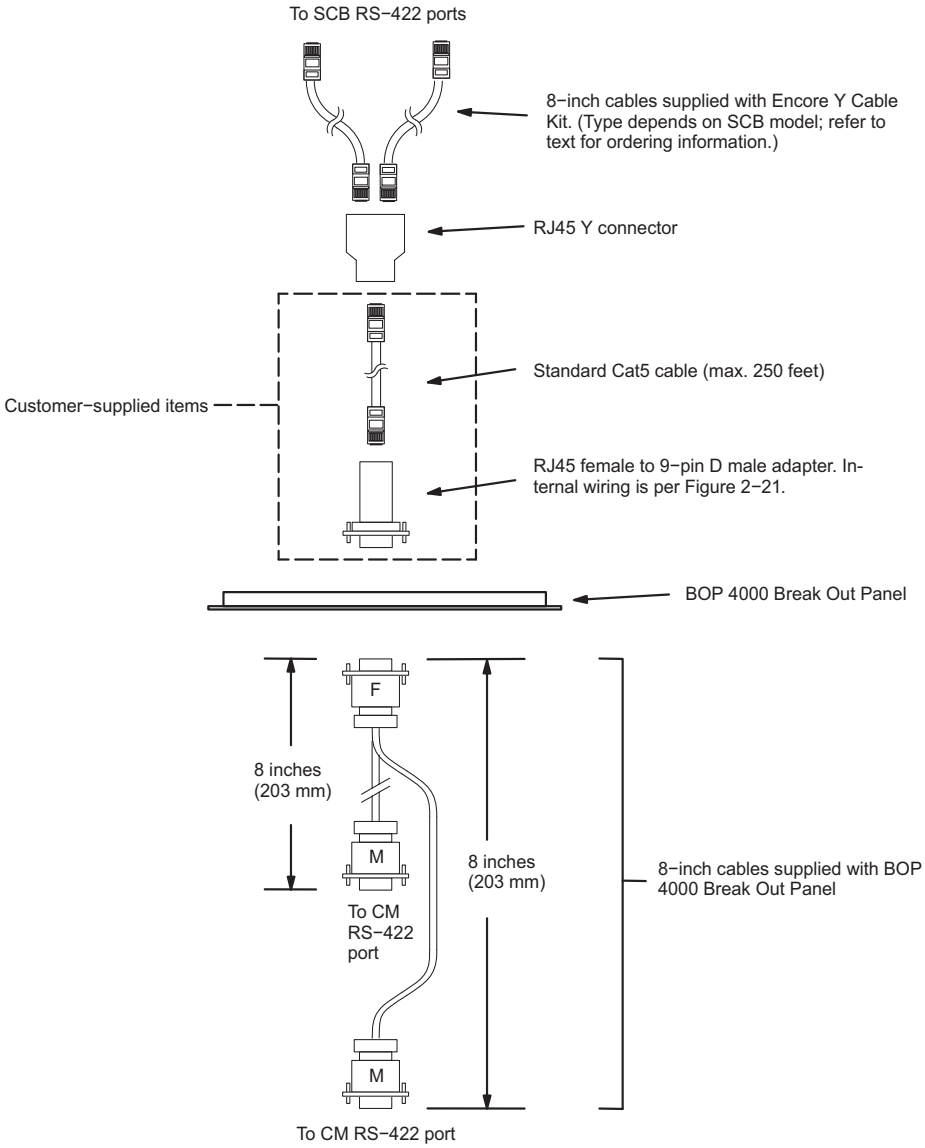

For those who wish to prepare their own cable:

- If the SCB is the old style (071 0884 xx series), build the cable as shown in Figure 24 on page 58.
- If the SCB is the new style (071 1000 xx), build the cable as shown in Figure 25 on page 59.

Figure 24. Cable for the Old-Style SCB

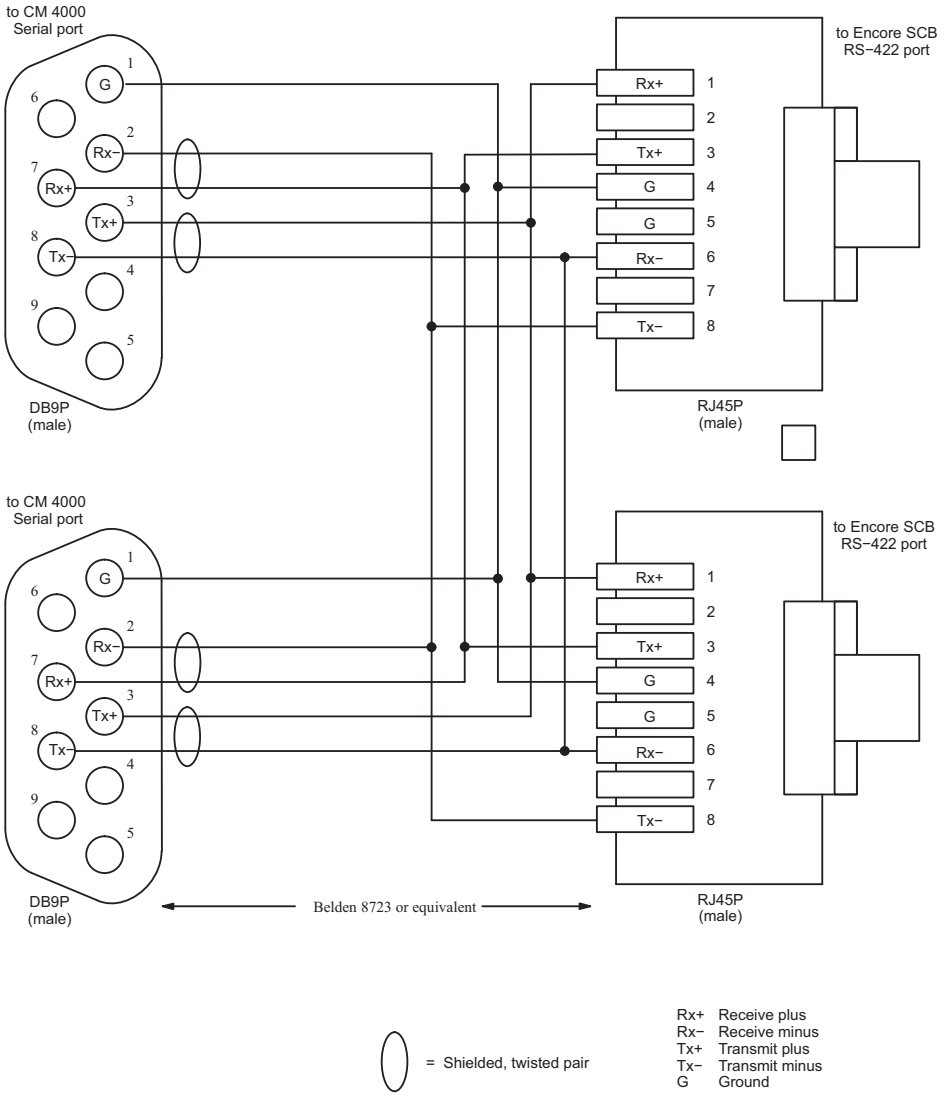

Figure 25. Cable for the New-Style SCB

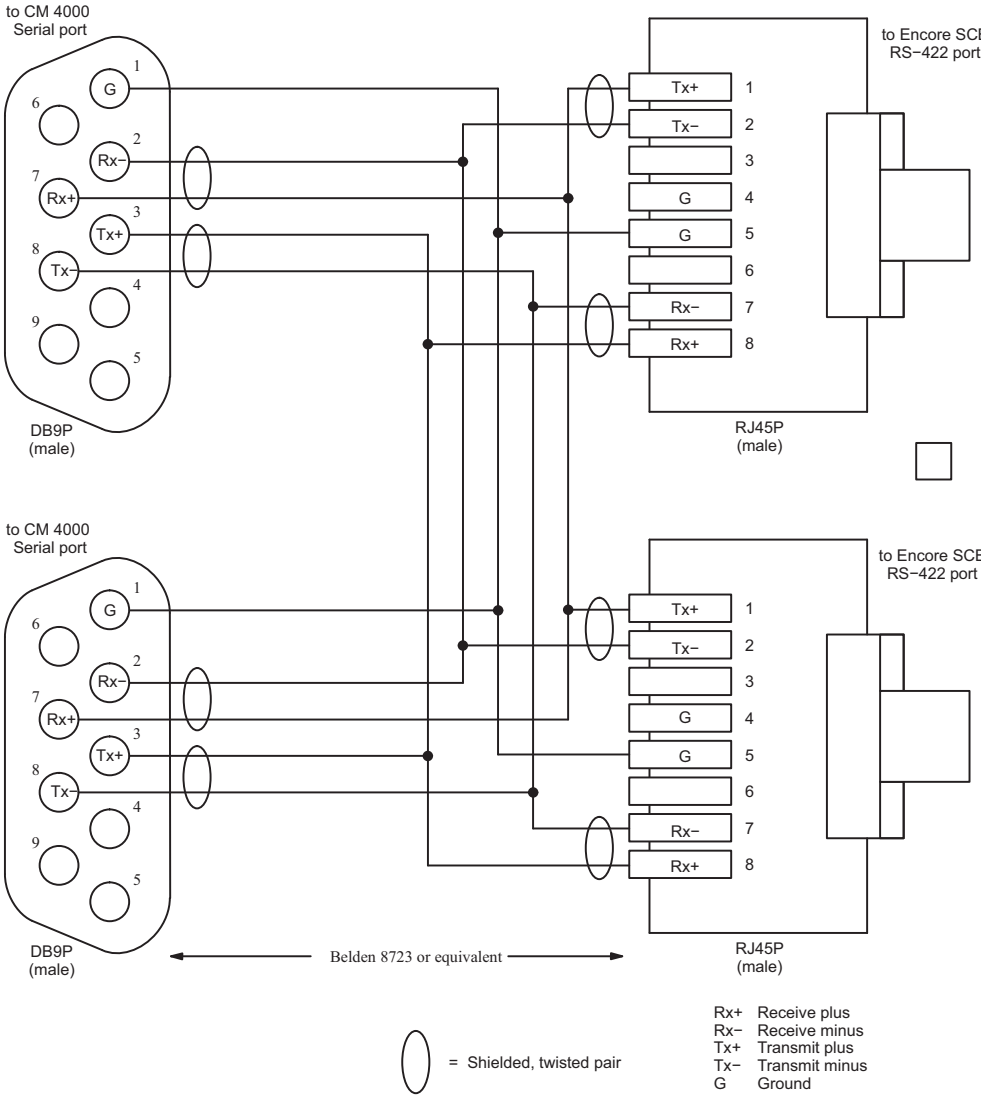

Software Configuration (Redundant Systems)

Software configuration for redundant systems is much the same as that already described for non-redundant systems (*Non-Redundant Installation* on page 53), except that two CM- 4400s and two CM-4400 serial ports are configured.

Jupiter can only be configured for one port if Jupiter AccuSwitch is controlling Encore. This is the same port for both the primary and secondary CM-4400.

Logical Level Mapping

The Jupiter Physical Switching menu refers to a “logical level” that is actually the logical level number; this number is the row number that the level is identified on the Switcher Level Descriptions table. The logical level name also appears on this table

In redundant systems, the same physical level number is used on more than one logical level. For example, a switcher could have video on level 1, left audio on level 2, and right audio also on level 2. In Figure 26, a 60 x 60 audio level is being used as two 60 x 30 switchers with half the outputs assigned to the left channel and the other half to the right channel.

This technique can help reduce the overall switcher size, but requires special entries to the Switcher Description table and the Switcher Outputs table.

Figure 26. Example of Logical Level Mapping

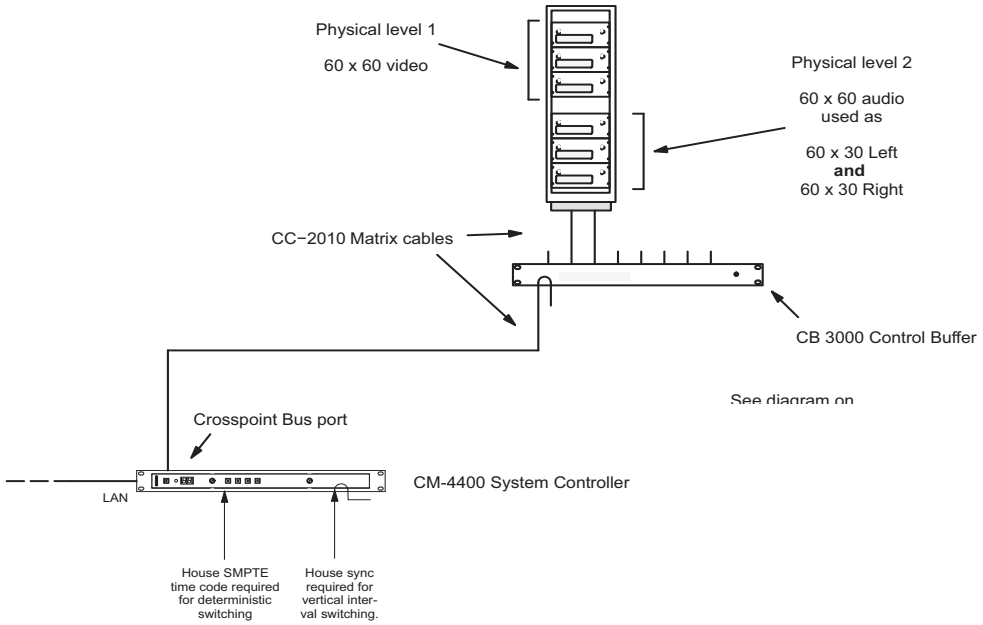

Data Matrix Switching

The Jupiter system can be used to control RS-232, RS-422, and RS-423 data switchers. In a typical application, a data matrix switcher can be used to route RS-422 machine control signals.

Newer model Routing switcher systems are equipped with the DM 400B Data Matrix boards; these boards have software-configurable rear-panel pinout functions and do not require crossover or Y-line cables.

Hardware Connections

For complete information regarding jumper settings and cabling, refer to the technical manual supplied with the data switcher.

Software Configuration

Configuration entries are required on the Switcher Description table, Switcher Input table, Switcher Output table, CP Input Set, and CP Output Set. For an overview of DM 400B configuration, see *Data Switching Applications* on page 166.

Encore Control of Jupiter

The Encore System Controller Board (SCB) can send switching commands to a Jupiter control system (Figure 27 on page 62). Jupiter can in turn send the commands to a Crosspoint Bus Routing switcher such as Trinix. The ESswitch Proposed ESbus Routing Switcher Dialect is used when Encore is controlling Jupiter.

The ESswitch protocol is selected on the Serial Protocol table; the Encore SCB is identified as a Serial device on the MPK Devices table. Hardware connections are the same as those used when Jupiter controls an Encore system.

In the case of redundant CM-4400 / redundant SCB systems, because both Encore SCBs send the same command, two CM-4400 ports are defined on the Serial Protocol table and two SCBs are defined on the MPK Devices table.

Contact Grass Valley for more information about the ESswitch dialect.

Figure 27. Encore Control of jupiter - Example System

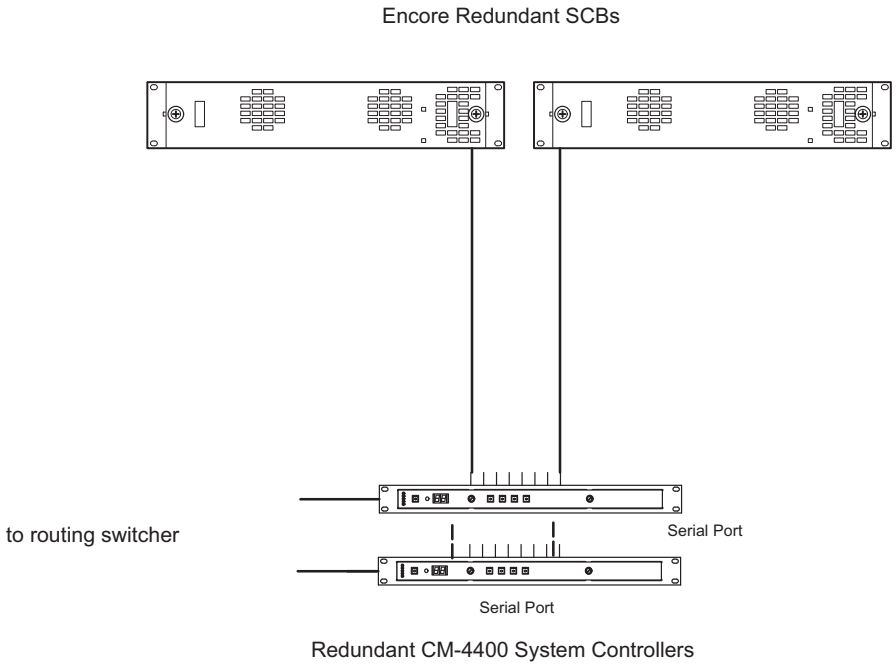

Connecting to Multiple Crosspoint Bus Distribution Switchers

Using a Single CM-4400

A single CM-4400 control board can be used to control more than one Crosspoint Bus Routing switcher; however, each physical level must have a unique number. Expanding a system may require changing the DIP switches or jumpers on the Routing switcher (for example, Trinix). See Figure 28. The DIP switch setting on the Routing switcher selects between the Extended, Super, and Ultra Crosspoint Bus settings.

This option is possible ONLY if all the routing switchers are configured to operate on the same Super Crosspoint Bus.

Note Older TVS 2000 matrix cards are not capable of operating on a Super Crosspoint Bus. However, a newer State machine PROM is available which will make Super Crosspoint Bus operations possible. The newer State Machine PROM is required for each older TVS 2000 board. Later versions of TVS 2000/3000 switchers are shipped with this PROM already installed.

Figure 28. Multiple Switcher Installation with Single CM- 4400

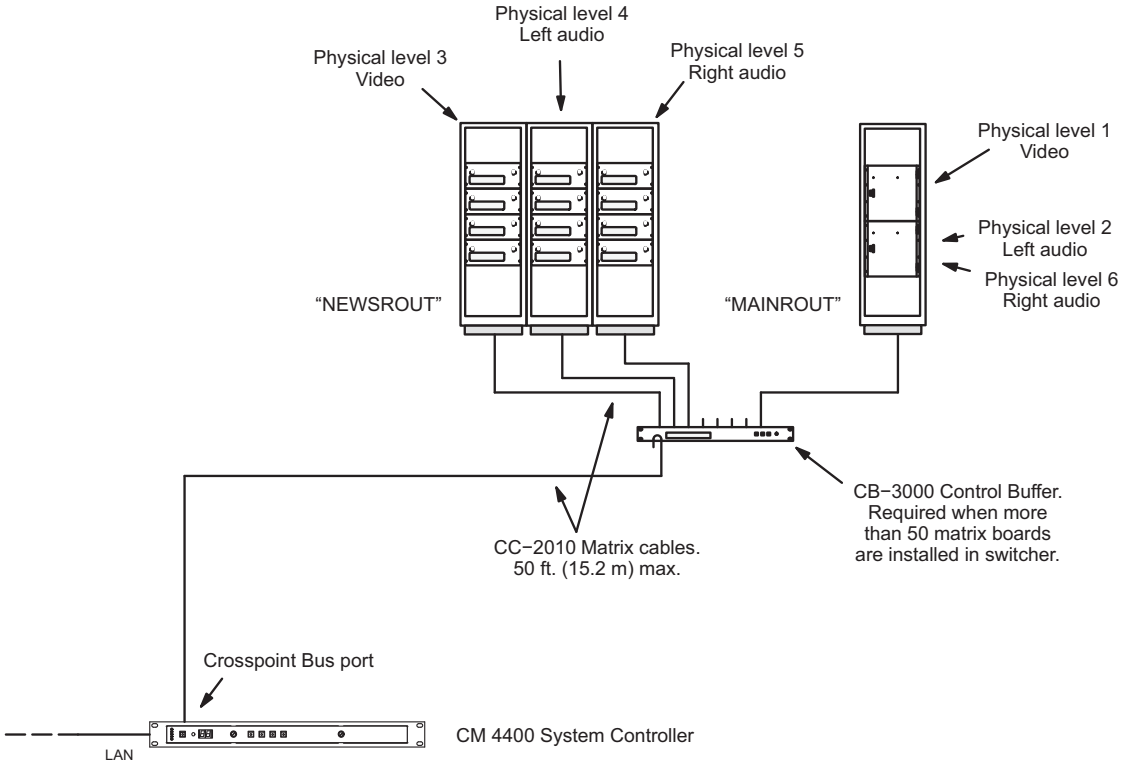

Dedicated CM-4400 Per Switcher

By using separate CM-4400s, physical level numbers may be duplicated from one switcher to another. When expanding a system, the need to change the DIP switches or jumpers on the routing switcher is eliminated. See Figure 29.

Figure 29. Multiple Switcher Installation with Dedicated CM- 4400

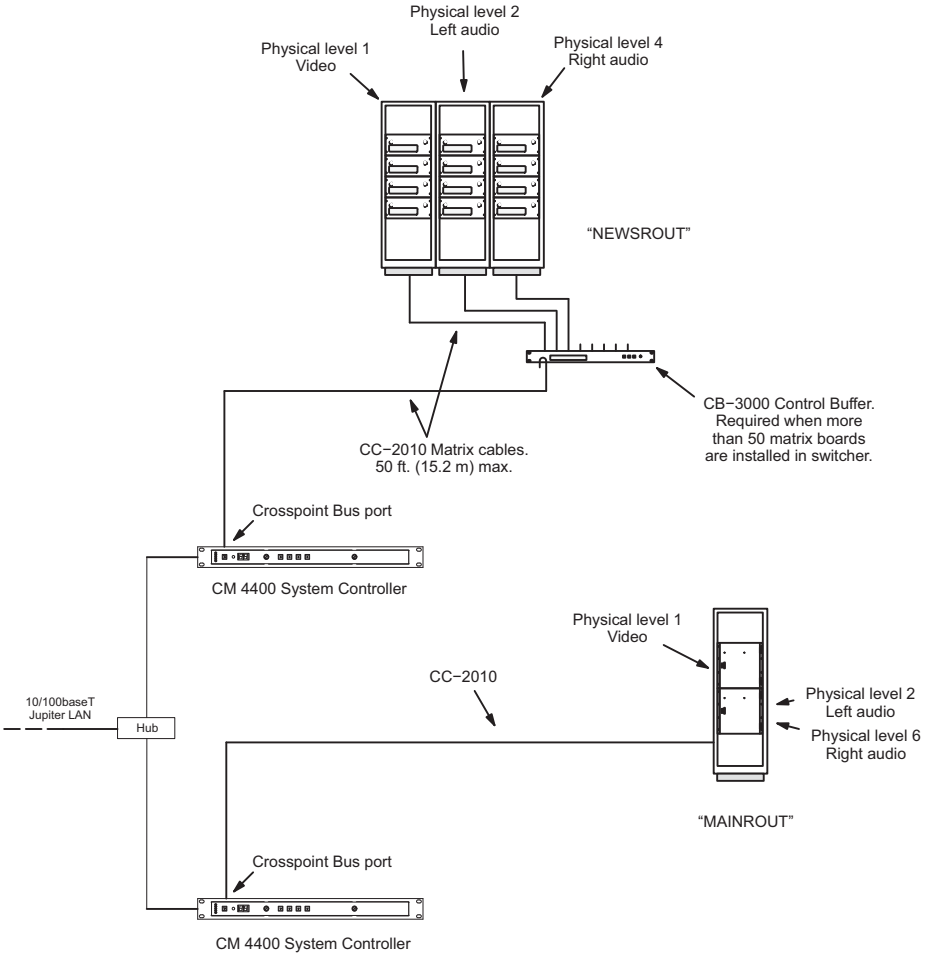

Multiple Distribution Switchers with Path Finding

Note Data router Path finding is not supported.

The path finding software option allows two or more Jupiter-controlled routing switchers to operate as a system. That is, one switcher can access the other's inputs through a number of tie lines. These tie lines can vary in number from one switcher to another, and from one level to another.

Two wiring schemes can be used:

- Sequential wiring, where tie lines are organized in blocks; as shown in Figure 30 on page 65.
- Non-sequential wiring, can be used when adding lines to an existing system; as shown in Figure 31 on page 66.

Sequential wiring information is entered using only one file server table, the Path finding Data table. Non-sequential wiring requires entries in the Non-Sequential Path Finding Data table.

Sequential Path Finding (Sequential Wiring)

When using Sequential Path Finding, the connections can start with any input or output number, but thereafter the connections must be sequential. Figure 30 on page 65 shows example connections for one level. Notice that the lowest number in an output group must be connected to the lowest number in the corresponding input group, and so forth.

The Maximum length that the CC-2010 Matrix cable can be, when connecting the CM-4400 to the Routing switcher, is 50 ft. (15.24 m). Grass Valley recommends installing a separate CM- 4400 System Controller for each Routing switcher using the CC-2010 Matrix cable.

Figure 30. Example of Sequential Path Finding Connections

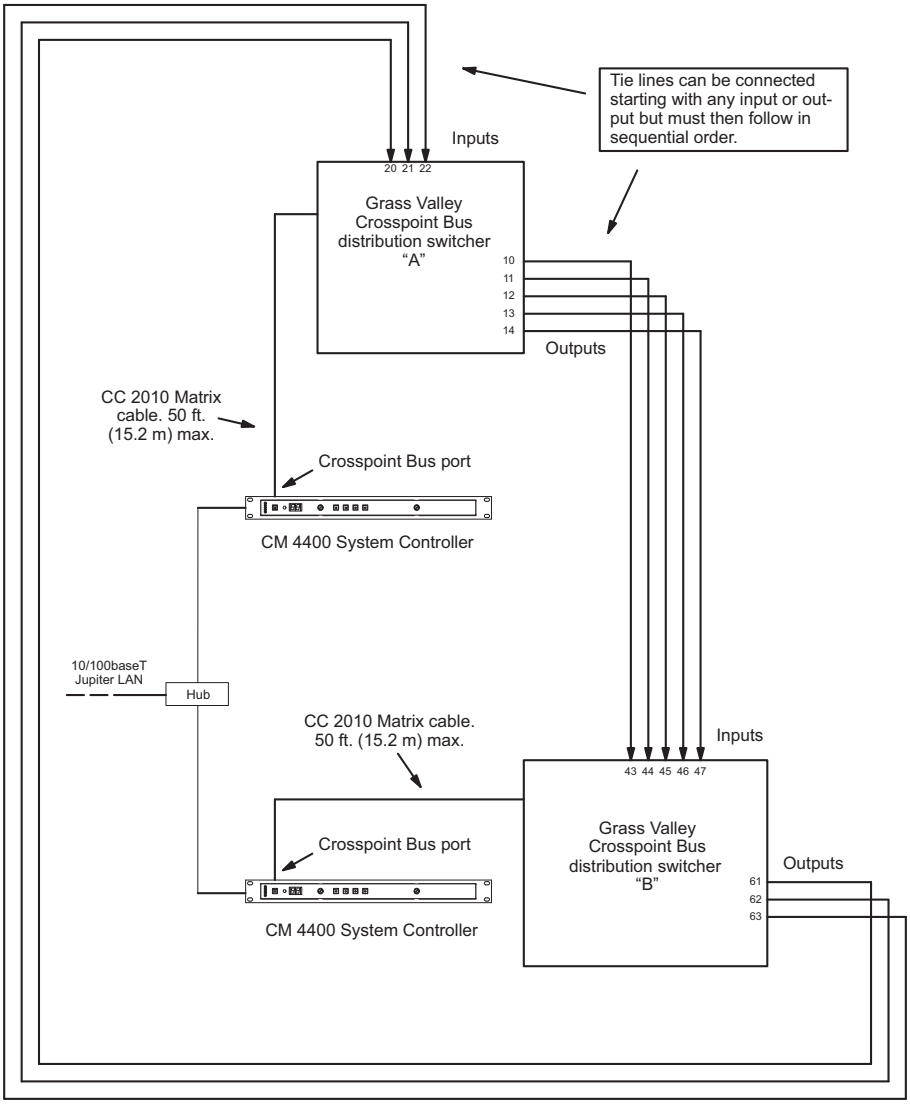

Non-sequential Path Finding (Non-sequential Wiring)

In some cases, especially when adding tie lines to an existing system, wiring new lines out of sequence may be desirable. Figure 31 on page 66 shows example connections for one level.

The Maximum length that the CC-2010 Matrix cable can be, when connecting the CM-4400 to the Routing switcher, is 50 ft. (15.24 m). Grass Valley recommends installing a separate CM- 4400 System Controller for each switcher using the CC-2010 Matrix cable.

Figure 31. Example of Non-Sequential Path Finding Connections

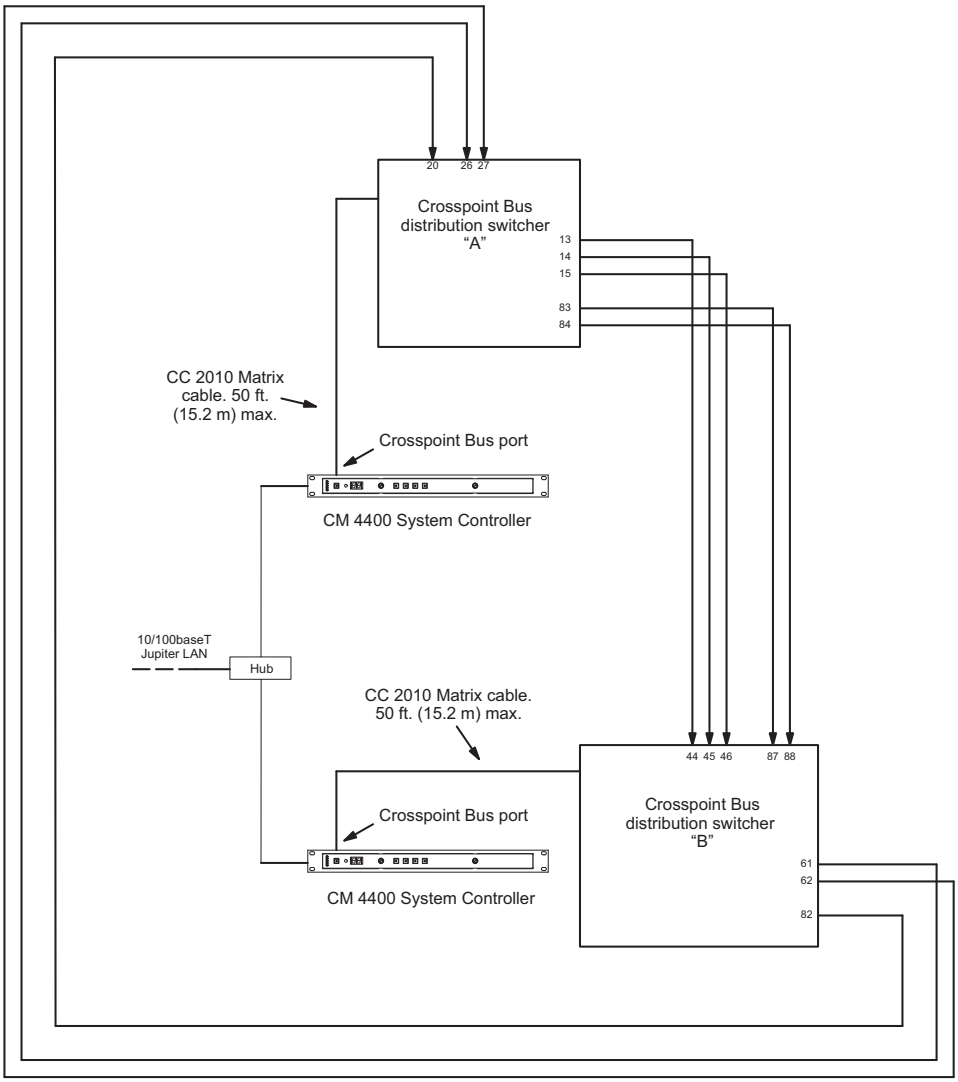

Path Finding with Data Routers

CM-4000 controllers running the AccuSwitch application will support two data router models:

- Venus data routers with DM-400B Data Matrix boards, and
- Concerto data routers.

In addition, AccuSwitch will now support path finding (tie line operation) between any combination of Venus DM-400B and Concerto data routers, up to a maximum of three routers.

For example, Figure 32 on page 67 shows a single CM-4000/AccuSwitch controlling a Venus and Concerto connected with five tie lines. All cables are 1–1 (pin–to–pin) including the tie line cables.

Figure 32. AccuSwitch Controlling Venus and Concerto Data Routers

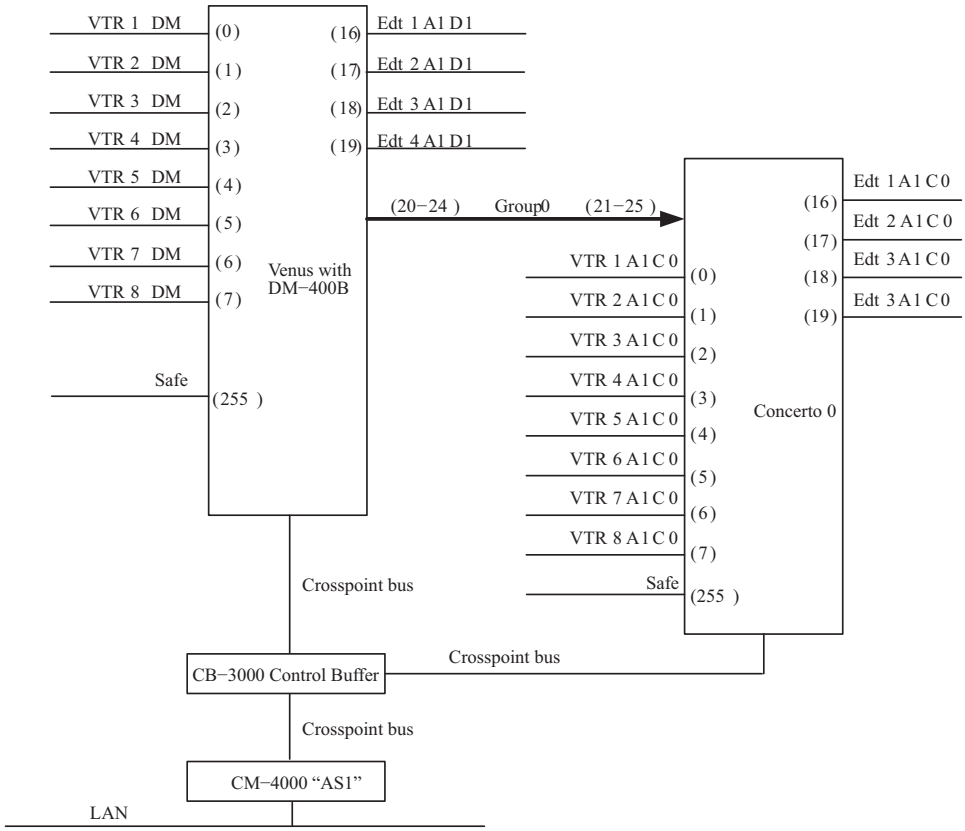

In the example shown in Figure 32, a Venus source data router has several data sources (VTR1DM VTR8DM) connected to ports 0-7. There are several destinations (Edt1A1D1 Edt4A1D1). The source data router is also connected to a destination data router (Concerto 0) via five tie lines (Group 0). This gives the system the ability for the destination data router to "pull" or get data sources that are connected to the Venus through to the destination

data sources Edt1A1C0 Edt3A1C0 on the Concerto. The return data path is automatically switched in the reverse direction.

Data Router Constraints

There are several required constraints when dealing with data routers and path finding:

- The software on AccuSwitch will only support the Venus DM-400B and the Concerto Data Routers.
- Data routers that are part of a path must be connected to the CM-4000/44000 controllers defined as "AS" (AccuSwitch) in the Type column of the Network Description table.
- The physical I/O numbers must be defined in both the input and output tables because the data routers require a switch to be made in both directions (for the forward and return data).
- A "SAFE" input for the data router level must be defined. This input is used with the "Enforce" or "Advise" features.
- The maximum number of "hops" in a data router path finding path is 2. For example, one Venus could be connected to a Concerto, which in turn could be connected to a second Concerto.

AccuSwitch also has the ability to lock or protect a data router output. This feature will also lock the reverse output which protects or locks the data path in both directions.

Installing a File Server PC

The minimum hardware and software requirements for the File server are described in *File Server Minimum Specifications* on page 279. Follow the instructions supplied with the file server for connecting the monitor, keyboard, and mouse.

Jupiter LAN

Jupiter file servers are connected to the CM-4400 through an IP hub, switch, or media converter via the Jupiter LAN. Grass valley does not recommend, nor does it support, connecting non-Jupiter equipment to the Jupiter LAN other than IP devices such as hubs or switches.

The Jupiter LAN is an IEEE 802.3 10/100BaseT network using a twisted pair cable with RJ-45 connectors (Cat 5E Enhanced is recommended). Shielded cable is also recommended, maximum length 60 meters. Compliance with EEC, EMC, EN series, UL- 1950, and CSA C22.2 No. 950-M89

standards requires use of a shielded cable. Maximum length for unshielded cable is 100 meters.

Figure 33. PC-to-CM Connections

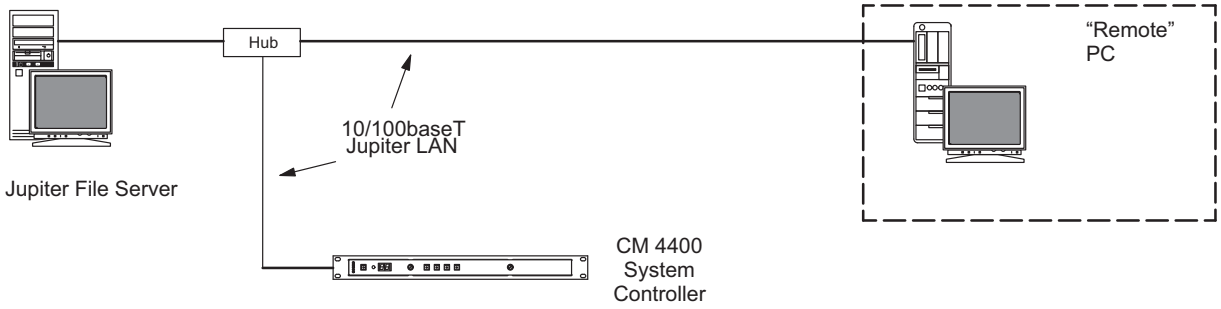

Printers

A printer can be connected to the local file server to print the contents of an entire Jupiter Configuration Set in a 132-column format. This printer can also be used to print the contents of the individual Configuration tables (see *Printing* on page 144).

Software Installation

Procedures for installing the Jupiter software on the file server are found in *Software Update* on page 80. The Release notes that are supplied with the Jupiter software will have Installation instructions as well as any special instructions for that version of the Jupiter software.

Remote PC Installation

Note The Remote PC feature is no longer supported (since the release of Jupiter version 7.8.2) and may not work as preferred due to changes in the Microsoft Windows operating system. Grass Valley has no control over the changes Microsoft implements. Furthermore, Grass Valley assumes no responsibility or liability for any continued use of this feature; the user of this feature assumes all risk and liability including, without limitation, lost profits, business interruption, or lost information.

A second PC can be installed on the Jupiter LAN in addition to the PC used as the file server. This "remote" PC can be used for certain Jupiter Network Suite (JNS) applications.

Control Panel Installation

See the manual that came with the preferred Control panel for Installation instructions, including hardware connections and entries to Jupiter configuration tables.

Note A maximum of sixteen devices may be assigned to an addressable controller port. For more information about calculating load factor, see the recommended maximum number of devices see *CM-4400 Serial Bus Loading* on page 281

Sync Reference Cables

A video reference (sync) signal should be connected to each CM-4400. This signal may be color black or composite sync with an amplitude between 1 V P-P and 4 V P-P.

The CM-4400 System Controller must have a sync reference in order for a Grass Valley Crosspoint Bus Routing switcher to switch during the house vertical interval. Crosspoint Bus routers are listed in *Supported Routers* on page 283.

Time Code Connections

Time code must be connected to the CM-4400 for deterministic switching. A time code connection to the CM-4400 also provides an accurate date and time stamp for JNS Logger messages.

The CM-4400 clock and the file server clock can be synchronized by referencing them to the same time source, such as a time code input (preferred) or a Network Time Protocol server.

For more information see *Time Standard Table* on page 203.

Master Control Connection

AccuSwitch interfaces with Master Control devices for router switch commands only.

See the manual that came with the preferred Master Control device for Installation instructions, including hardware connections and entries to Jupiter configuration tables.

CC 2010 Matrix (Crosspoint Bus) Cable

Grass Valley's Trinix, Concerto, and Venus Routing switchers use a very fast, reliable, and proprietary connection called the Crosspoint Bus (XPT).

The CC 2010 Matrix (Crosspoint Bus) cable is used to connect the CM-4400 to the routing switcher's Crosspoint Bus. Depending on the size of the switcher, this bus may require intermediate buffering through the CB 3000 Control Buffer.

The CC 2010 is a 10-conductor (plus ground) cable with an installed 15-pin D male connectors. Table 3 identifies several ready-made cables that are available from Grass Valley:

Table 3. Cable lengths

Length	Part #
1 foot (0.3 m)	01-048592-001
2 feet (0.6 m)	01-048592-002
3 feet (0.9 m)	01-048592-003
10 feet (3 m)	01-048592-010
25 feet (7.6 m)	01-048592-025
50 feet (15.2 m)	01-048592-050
100 feet (30 m)	01-048592-100

All Crosspoint Bus connectors on the rear-panel are female type with 15-pin D connections.

Note If you are connecting to a Concerto or Trinix Routing switcher, the crosspoint bus must be terminated using a Crosspoint Bus Terminator. This connector must be at the point that is farthest from the control processor. No termination is required for other routers.

For specific wiring instructions concerning CC 2010 Crosspoint Bus Cables, please refer to your routing switcher's installation manual.

Crosspoint Bus Cables Diagram

For those who wish to prepare their own cables, pin-outs are shown in Figure 34. The cable itself should be Belden 9505 or equivalent. Steps should be taken to shield the connectors. For example, using EMI housings or ferrite cores. Ferrite core details are given in *VDE EMI/RFI Modifications to Matrix Cables* on page 72.

Figure 34. CC 2010 Wiring.

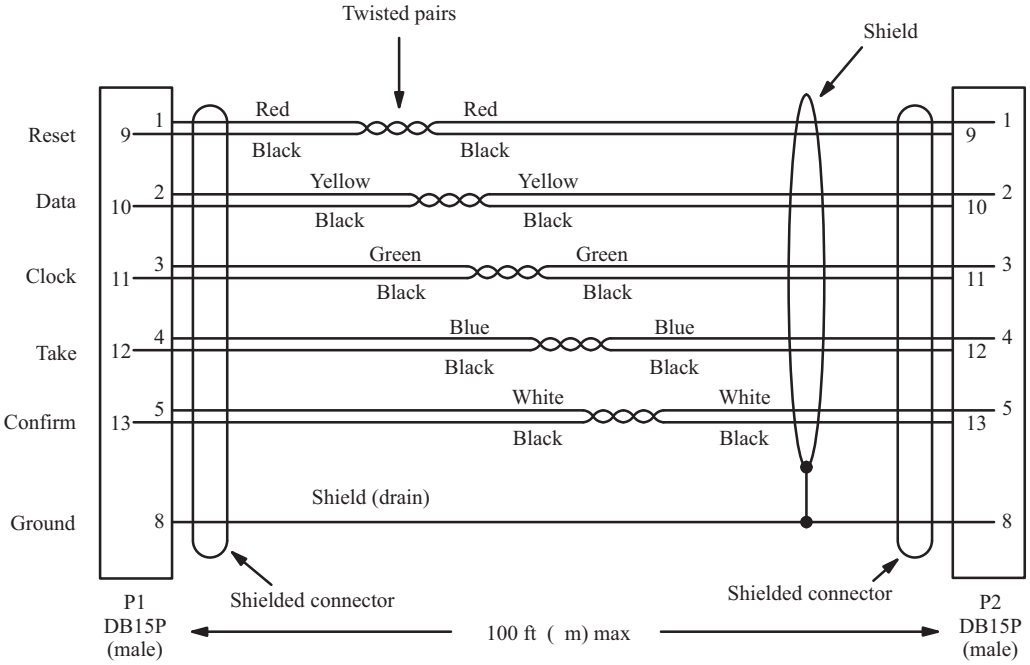

VDE EMI/RFI Modifications to Matrix Cables

User-supplied matrix cables for VDE installations will require a ferrite core located at each end of the cable, adjacent to the connector.

Figure 35. Matrix Cable VDE Modifications

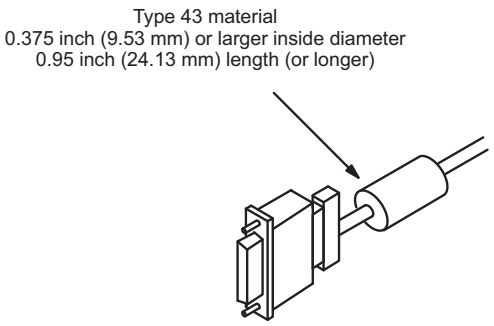

Type 43 material sources

Fair−Rite, part no. 2643625102

Fair−Rite Products Corp., P.O. Box J, Commercial Row, Wallkill, NY 12589, USA; Tel. (914) 895−2055.

Chomerics, part no. 83−10−A637−1000

Chomerics Inc., 77 Dragon Ct., Woburn, MA 01888 USA; Tel. (617) 935−4850.

CB 3000 Control Buffer

Figure 36. The CB 3000 Control Buffer - Front and Rear Panel

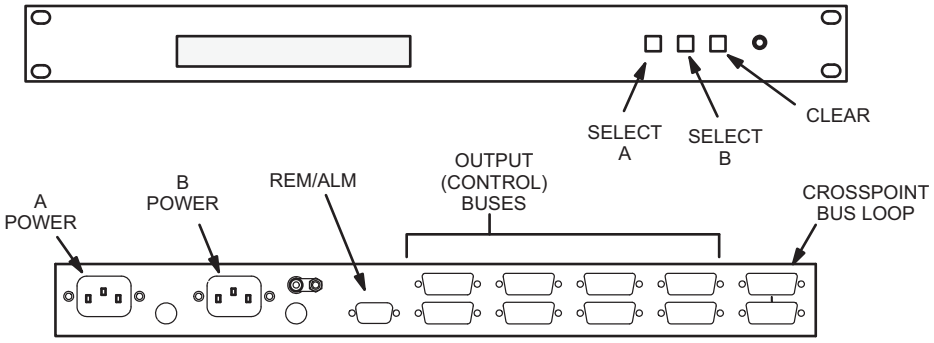

- The CB 3000 Control Buffer is required for buffering crosspoint data when More than 96 Venus crosspoint boards, or
- More than 50 TVS/TAS 3000 or TVS/TAS 2000 matrix boards, or

the Crosspoint Bus is sent to more than one equipment rack. A CB 3000 may also be needed if the system includes more than one Routing switcher type (For example, a Trinix and an Apex) and one of the routers is at or near the bus limit. For more information, contact Grass Valley Tech Support (see *Contacting Grass Valley* on page 4).

Each of the eight CB 3000 outputs can drive up to 50 (TVS/TAS) or up to 96 (Venus) crosspoint boards.

Each CB 3000 output contains two identical channels, with channel A normally used; this condition is indicated by the eight green LEDs in the display window. If a fault is detected in channel A, that output will automatically switch to channel B; in this case the green LEDs would be off and one or more red LEDs would be on. If a changeover occurs, first check to see if the unit will return to normal operation by pressing the **Select A** button:

- If the unit returns to channel A operation, but a red LED remains on, press the **Clear** button on the front of the CB 3000 (Figure 36). If the red LEDs turn off, it can be assumed that the unit is fully operational.
- If the unit immediately returns to channel B operation, contact Grass Valley Technical Support (see *Contacting Grass Valley* on page 4). For a description of the front panel window LEDs (see *CB 3000 Crosspoint Buffer and Interface* on page 258.)

Routing Switcher Requirements

Apex audio routers do not require a CB 3000-regardless of system expansion-because the crosspoint bus is connected only to one chassis.

For Trinix requirements, please refer to the Planning section of the *Trinix Planning and Installation Manual*.

Some systems may be equipped with one or more single-output CB 2000 Control Buffers rather than a CB 3000. Please refer to the wiring information supplied with your switcher for details.

Thomson/Philips DD Series (Diamond) Connection

For the installation steps for the Thomson/Philips DD Series, see the Hardware section of the *CM-4000 Installation manual*

Automation and Other Systems Connections

The following refers to all automation-to-CM-4400 systems. The CM-4400 will support multiple connections to an automation system. For example, "channel A control" of an automation system could be connected to Serial Port 1 of the CM-4400 and "channel B control" connected to Serial Port 2).

CM-4400s can be installed as a redundant pair where each monitors the other. If a fault is detected in the [active] master unit, control will be switched to the other device automatically.

Devices Using "ESswitch" ESbus Routing Switcher Dialect

"ESswitch" protocol is set on the Serial Protocol table and the control computer is identified on the MPK Devices table (for more information about Configuration tables, see *Configurator Application* on page 109). A technical description of the proposed dialect is available; please contact Grass Valley for more information.

Figure 37. Example of an Automation System Installation.

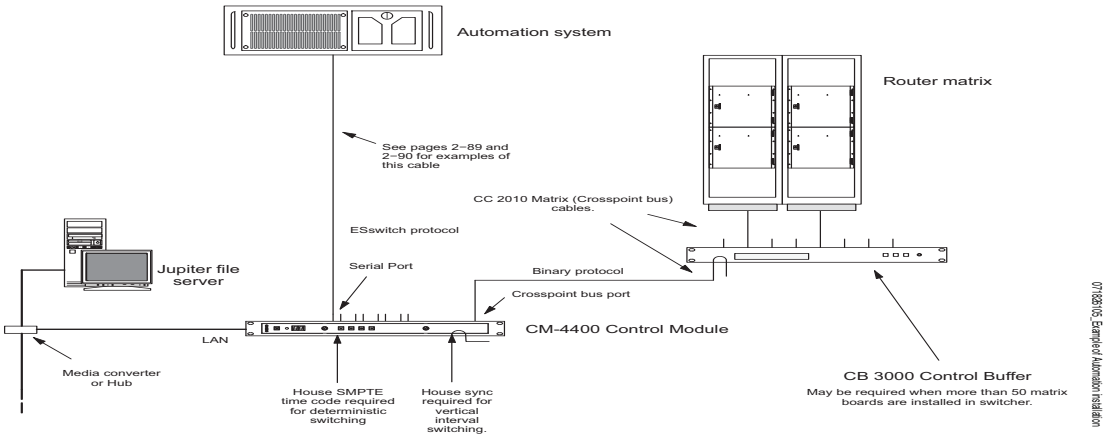

Devices using Jupiter ASCII Computer Interface Protocol

Figure 38. Example of Devices using Jupiter ASCII Computer Interface Protocol.

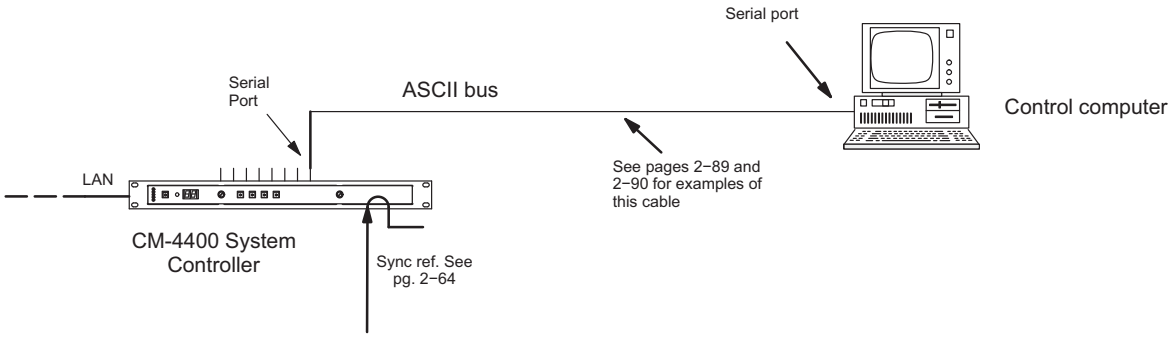

These systems are similar to that shown on page 2-87. “ASCII” protocol is set on the Serial Protocol table (page 5-30); and the control computer is identified on the MPK Devices table (page 5-107). A technical description of the Jupiter ASCII computer interface protocol is presented in *Jupiter ASCII Communications Protocol* on page 273.

This method is also used for connection to an Image Video TSI-100 tally system.

Figure 39. Example of Devices using Jupiter ASCII Computer Interface Protocol

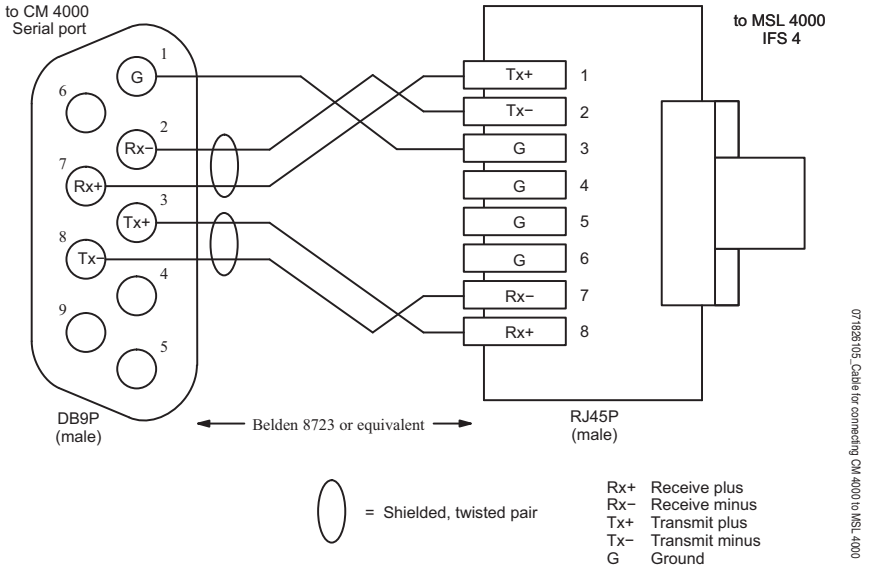

Figure 40. Cable for connecting CM-4400 to AT-type computer.

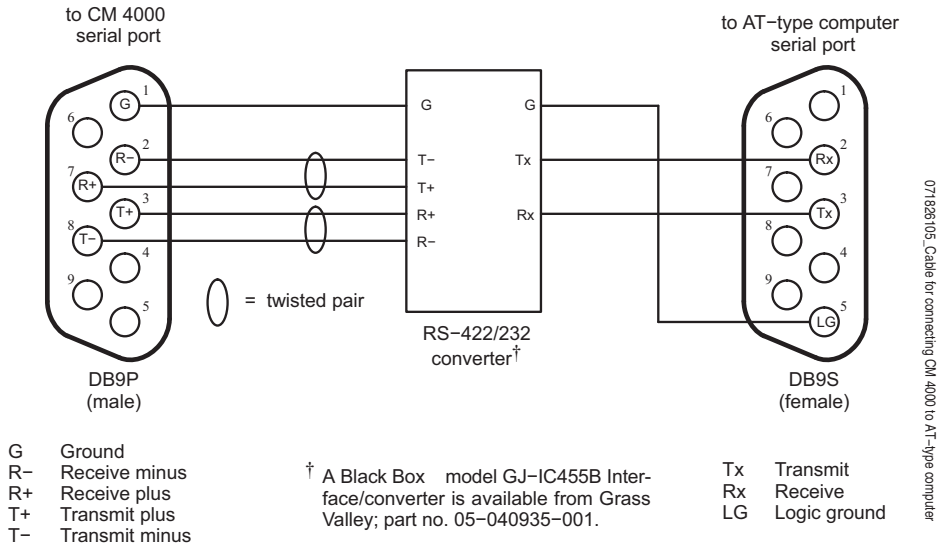

Figure 41. Wiring for connecting CM-4400 to 25-pin PC-type serial port

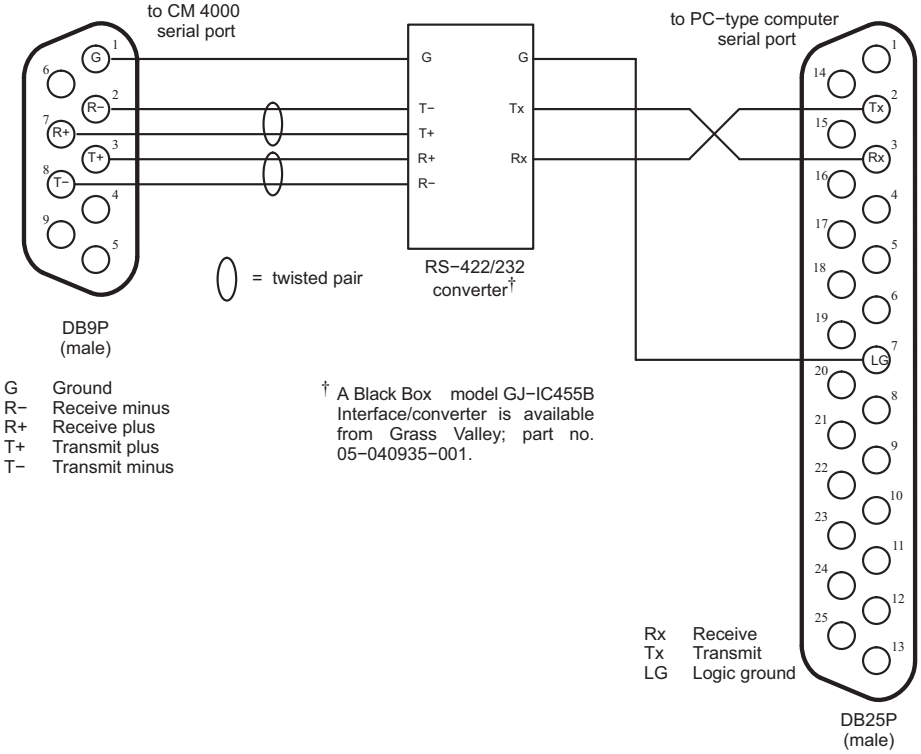

Section 3

Software Installation

Installation

New Jupiter systems ship from the factory with the latest version of software pre-installed. New systems do not need their software updated. However, new Jupiter systems will need to be configured to operate at your facility. For quick system startup you may wish to refer to the *Jupiter Getting Started Guide*. This booklet provides an abbreviated version of the configuration instructions in this manual and is available on Grass Valley's Web site.

If the Jupiter software is being upgraded from a previous version, you must follow the instructions in the appropriate Grass Valley Release note. Failure to do so could result in loss of user data. For more information, please contact Grass Valley Technical Support (see *Contacting Grass Valley* on page 4 in this manual).

If the software is being installed for the first time, follow the procedure below.

Caveats

Please read the following caveats before starting the installation procedure. During this upgrade or installation procedure:

- Read the Installation instructions before you start the Installation process.
- It is recommended that you obtain the required IP address for the Jupiter system before you start the installation process. See your Network administrator.
- All switcher status will be lost. To restore status, make note of the status of all outputs before starting the upgrade and re-take all switches. Or, you can use Router Save/Restore to restore status on Grass Valley (GV) routers.

- All memory on all Jupiter control system boards will be cleared after the installation and download process. The memory is cleared due to a mandatory “pmemclear“ command.

Note For more information about clearing the parameter memory, see *Clearing Persistent Memory (PMEM)* on page 107.

- All configuration sets will need to be recompiled.

Equipment Required

GV-supplied PC 3000 (F7-029500-121) file server or a PC with the minimum requirements listed in *File Server Minimum Specifications* *on page 279*.

Software Required

Installation of the Jupiter 8.0 release is only supported on the English version of Windows XP Professional SP2 and Windows 7 Professional.

Windows Firewall and any Anti-Virus Firewall must be disabled to allow the Bootp, TFTP, and JNS applications to operate properly.

Materials Supplied

The following information lists the supplied materials.

- Either JUP-SW 4400 (Jupiter AccuSwitch for CM-4400) or JUP-SW 4000 (Jupiter AccuSwitch for CM-4000) software.
- USB drive with the:
  - Current release software
  - Supporting Documentation
- Application specific software licenses
- AccuSwitch Soft Panels and Visual Status Display

Software Update

CAUTION During the software update your Jupiter system will be taken off-line for a short time while the control boards (CM-4400) are updated. Existing matrix cross-points will remain selected, but source to destination changes will not be possible while the control boards are off-line.

Contact Grass Valley Customer Support if you have any questions regarding this software update.

Note Read these instructions carefully and follow all the steps exactly to help ensure that your update goes smoothly.

This procedure is for updating an existing Jupiter system that has been previously installed, completely configured, and is operating correctly.

It is recommended that you gather the required IP address for the Jupiter system before you start the installation process. You will be asked for this information when you install Jupiter (Figure 52 on page 86).

The update procedure is a two-step process. The first step is *Removing the Previous Version* of the Jupiter software. The second step is *Installing the Latest Version* of the application.

Each of these steps is described in detail below.

Removing the Previous Version

The Installation program will check to see if an earlier version of Jupiter is installed on the computer. The earlier version will be removed before the latest version will be installed. You will need to start the Installation program again after the earlier version has been removed.

To start the update process and remove the previous version:

1. Insert the Jupiter System Software USB drive into the PC. If the Installation Program doesn't start up automatically, double-click the **Setup.exe** icon on the USB drive. The Preparing to Install screen will then be displayed (Figure 42).

Figure 42. Preparing to Install Screen

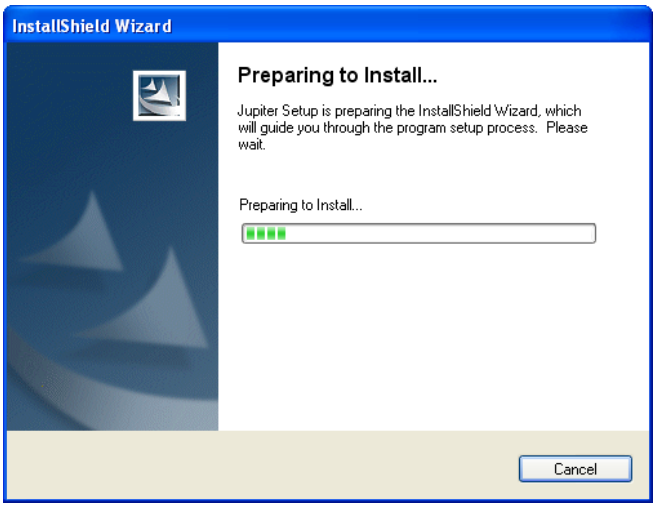

The Welcome - Remove the program screen will then appear after a few minutes (Figure 43).

Figure 43. Welcome - Remove the Program Screen

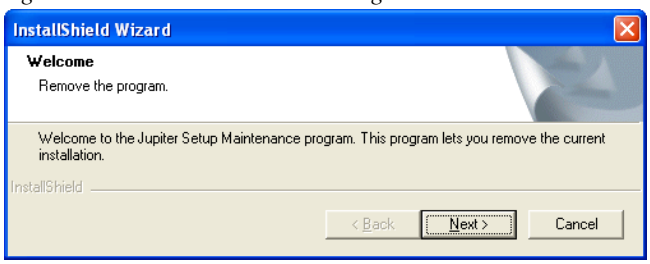

2. Click the **Next>** button. The Setup Status screen will then appear (Figure 44).

Figure 44. Setup Status Screen

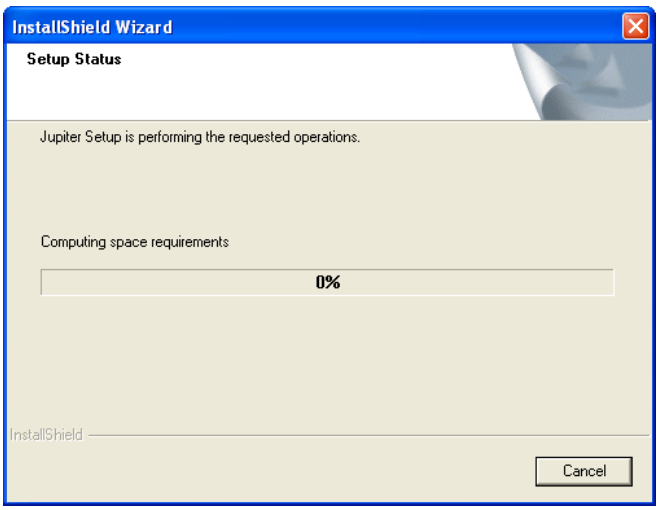

The previous version of the application will then be removed.

When the removal of the application has been completed, the Maintenance Complete screen will then appear (Figure 45).

Figure 45. Maintenance Complete Screen

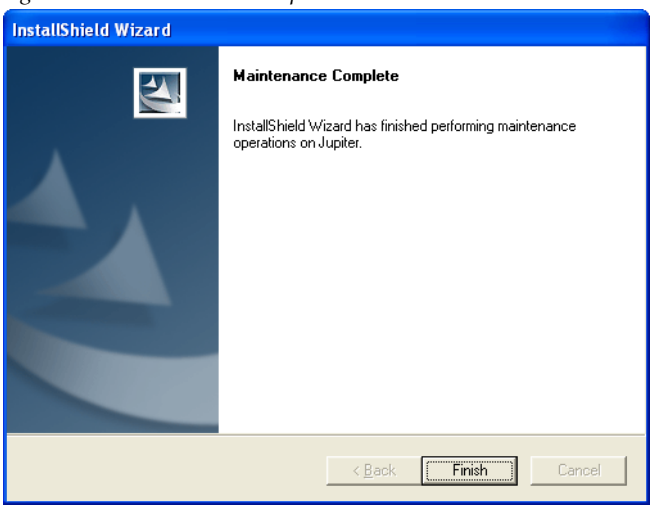

3. Click the **Finish** button. The InstallShield Wizard application will then close.

   You can now install the latest version of Jupiter.

Installing the Latest Version

Note Before you begin the installation process, make sure that you close all Jupiter programs on the configuration PC and disable any virus protection programs or firewalls. You should restart the computer to stop any hidden activity.

The software can be installed on either Windows XP Professional or Windows 7 Professional platforms. Refer to the respective installation procedure:

Windows XP Professional Installation on page 83

Windows 7 Professional Installation on page 89

Windows XP Professional Installation

1. Insert the Jupiter System Software USB drive into the PC. The Jupiter Installation Welcome screen will then be displayed (Figure 46 on page 84).

Note If the Installation Program doesn't start up automatically, double-click the **Setup.exe** icon on the USB drive or click Start, Select Run..., and then type, in the *Open* field, `D:\Setup.exe`. Substitute the letter of your USB drive for "D".

Figure 46. Jupiter Installation Welcome Screen

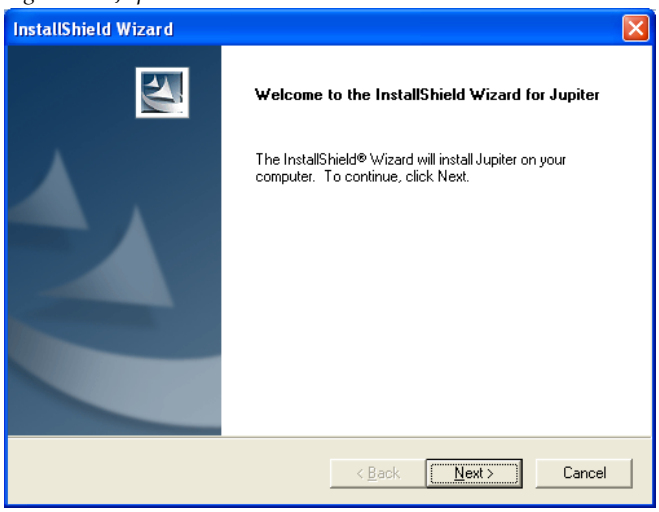

2. Click the **Next >** button. The Customer Information screen will then appear (Figure 47).

Figure 47. Customer Information

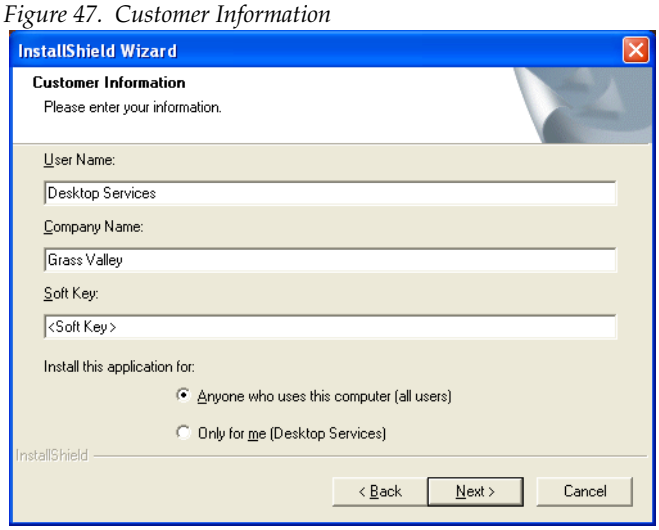

3. Enter your User Name, Company Name, and the Soft Key in their respective fields.

Note The Soft key can be found on the Software Key Licence documentation shipped with the USB drive.

4. Select the **Anyone who uses this computer (all users)** radio button.

5. Click the **Next >** button. The Software License Agreement screen will then appear (Figure 48).

Figure 48. License Agreement

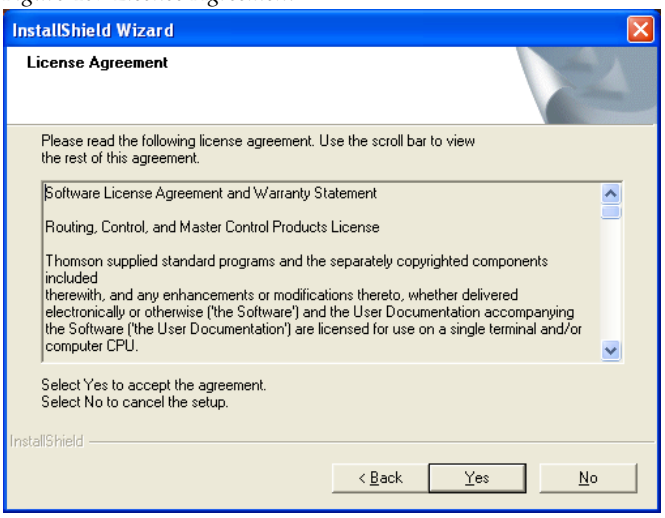

6. Read the License Agreement and then click the **Yes** button to accept the license agreement. The Setup Type screen will then appear (Figure 49).

Note Clicking the **No** button will stop the installation process.

Figure 49. Setup Type Screen

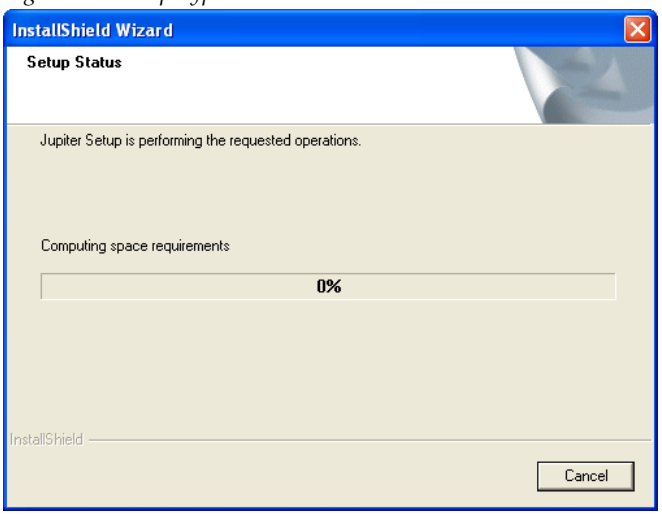

7. Select the preferred type of installation and then click the **Next >** button. The Setup process will then start.

   The Question dialog will appear (Figure 50 on page 86). You will need the Part Number Revision letter on the MCC-3500 Control Panel Logic board. For example, in figure below the part number is correct.

Figure 50. Question Screen

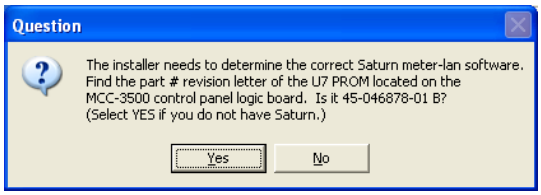

8. Click the **Yes** button if the letter is correct or if you are not using the Saturn Master Control system. The Choose Destination location screen will then appear (Figure 51).

Figure 51. Choose Destination Location Screen

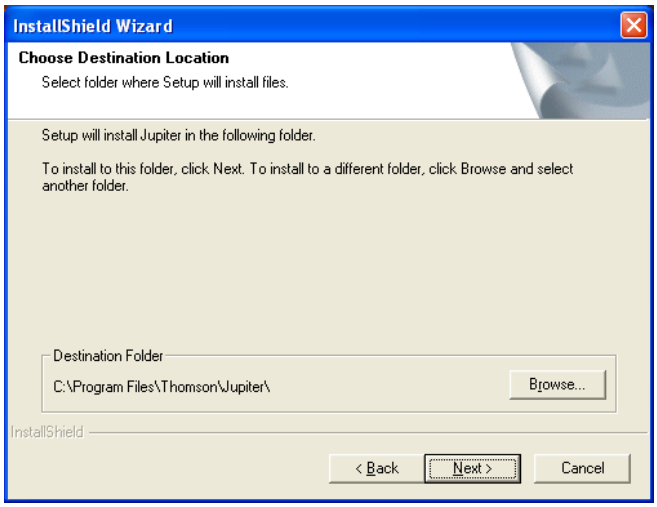

9. Browse to the Destination folder of your choice and then click the **Next>** button. The Enter Network Information dialog will then appear (Figure 52).

Figure 52. Enter Network Information Screen

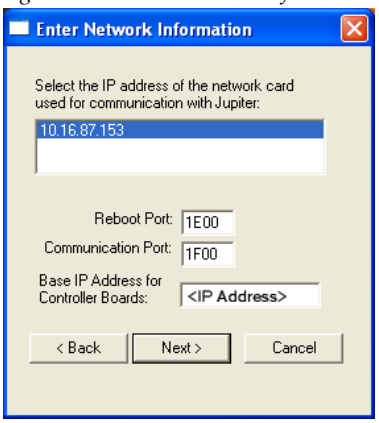

10. Select the IP address for the Network card that will communicate with the Jupiter system. This is the IP address that you were asked to obtain earlier.

Note Consult with your Network administrator if you do not know the network values to enter.

- If there is more than one Network card installed, all the cards will appear in the dialog window. Select the preferred network card.
- Enter the Port information in the respective fields

11. Enter the IP address for the Controller boards in the required field and then click the **Next>** button.

Note It is strongly recommended that you use a Static IP address. Using DHCP may cause configuration problems.

If you are using DHCP, that is your IP address is not static, you will see the following Question dialog (Figure 53).

Figure 53. Question Dialog

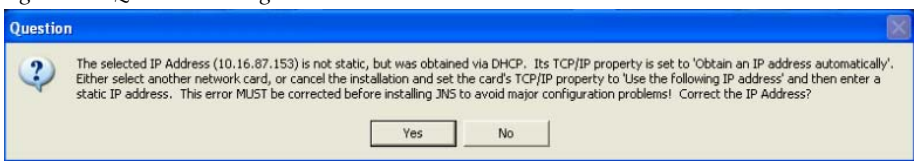

This dialog is a warning; however, a Static IP address must be entered to avoid operation problems.

If you want to enter a Static IP address, click the **Yes** button, stop the installation process and then add the static IP address after restarting the Installation.

If you do not want to correct the IP address, click the **No** button.

The Choose Destination Location screen will then appear (Figure 54).

Figure 54. Start Copying Files Screen

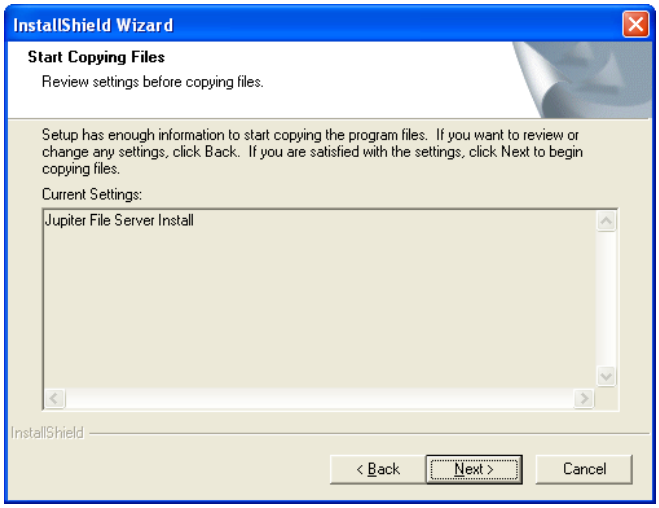

12. Review the Current Settings and then click the **Next>** button. The Setup Status screen will then appear (Figure 55).

Figure 55. Setup Status Screen

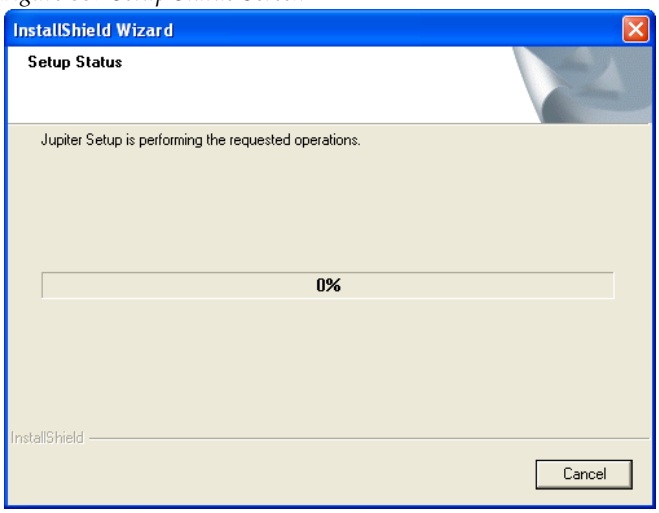

When the Installation process is completed the InstallShield Wizard Complete screen will then appear (Figure 56).

Figure 56. InstallShield Wizard Complete Screen

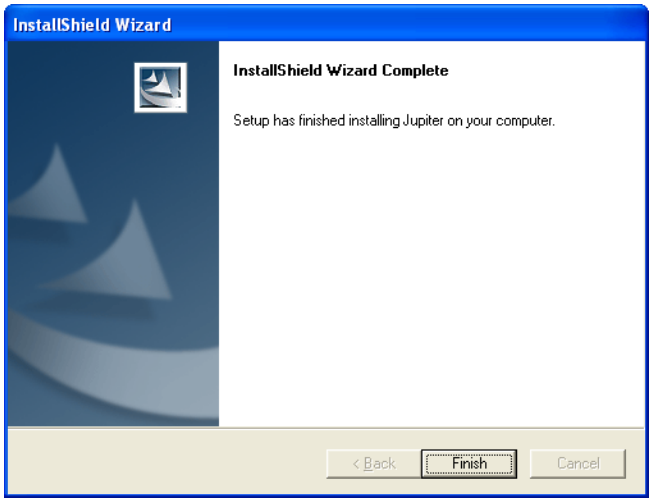

13. Click the **Finish** button. The installation process is now completed.

Windows 7 Professional Installation

1. Insert the Jupiter System Software USB drive into the PC and navigate to the setup file (Figure 57 on page 90).

Figure 57. Jupiter Windows 7 Installation - USB drive Contents

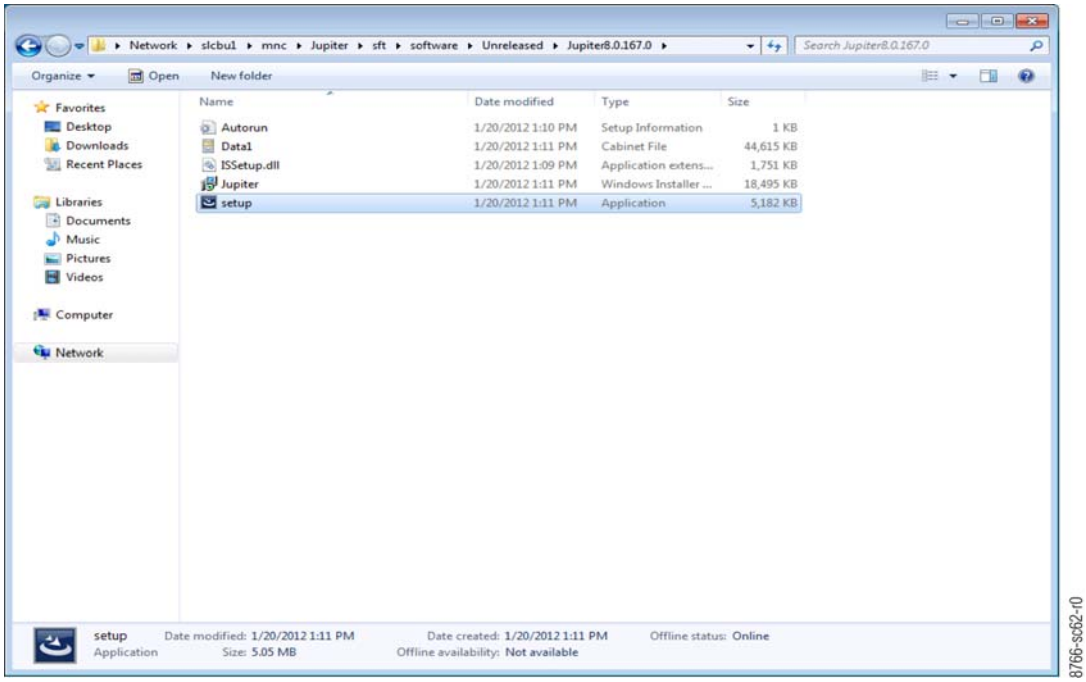

2. Right-click the setup file and select **Run as Administrator** (Figure 58).

Figure 58. Jupiter Windows 7 Installation - Run as Administrator

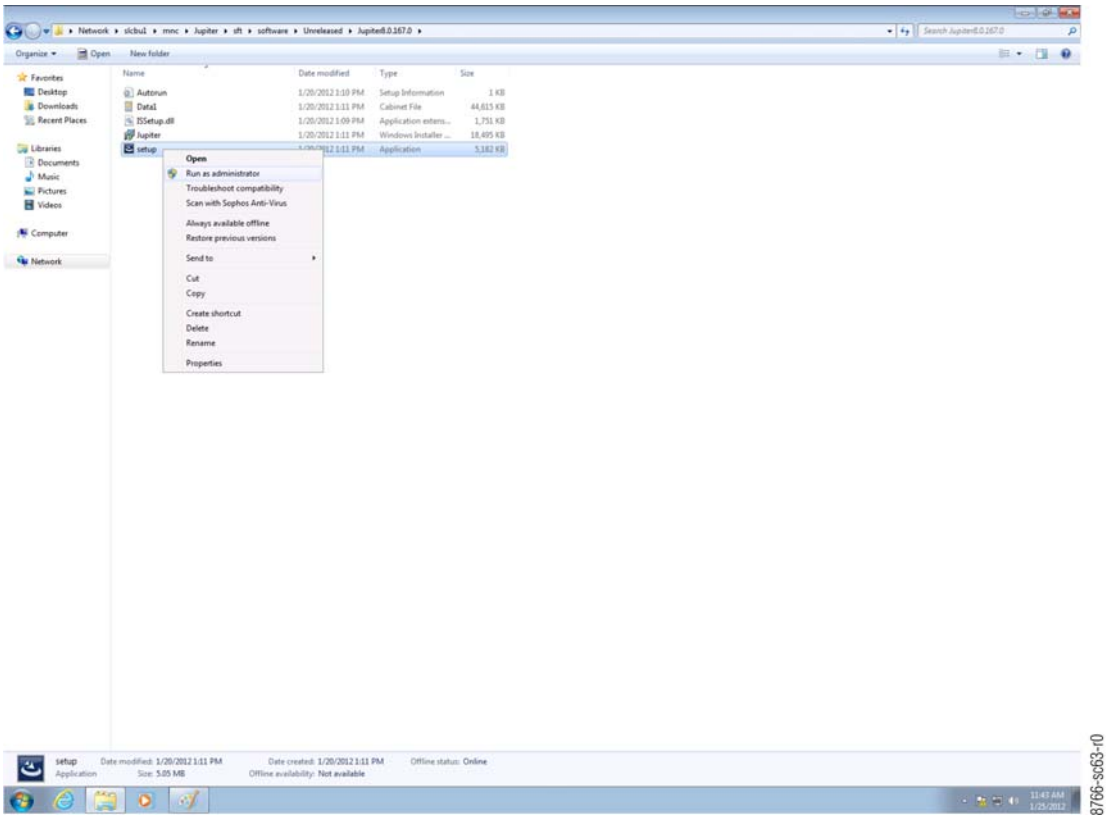

3. The UAC window opens. Click **Yes** to allow install.

4. The **Jupiter -InstallShield Wizard Welcome** dialog box will then be displayed (Figure 59 on page 91).

Note If the Installation Program doesn't start up automatically, double-click the **Setup.exe** icon on the USB drive or click Start, Select Run..., and then type, in the *Open* field, `D:\Setup.exe`. Substitute the letter of your USB drive for "D".

Figure 59. Jupiter Windows 7 Installation - Welcome Dialog Box

5. Click the **Next >** button. The **Customer Information** dialog box will then appear (Figure 60).

Figure 60. Jupiter Windows 7 Installation - Customer Information Dialog Box

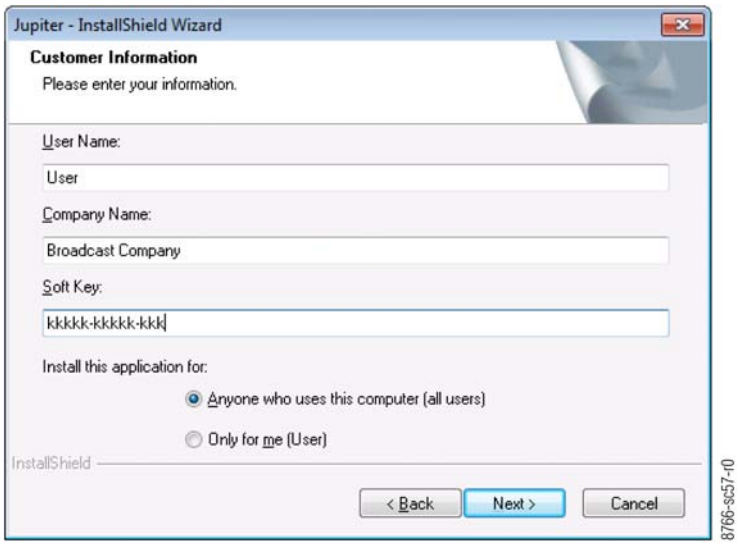

6. Enter your User Name, Company Name, and the Soft Key in their respective fields.

Note The Soft key can be found on the plastic case that the Jupiter USB drive was shipped with.

7. Select the **Anyone who uses this computer (all users)** radio button.

8. Click the **Next >** button. The **License Agreement** dialog box will then appear (Figure 61).

Figure 61. Jupiter Windows 7 Installation - License Agreement Dialog Box

9. Read the **License Agreement** and then click the **Yes** button to accept the license agreement. The **Choose Destination Location** dialog box will then appear (Figure 62).

Note In the next step, 64 bit Windows 7 machines will automatically install to **Program Files x86** instead of **Program Files**.

Figure 62. Jupiter Windows 7 Installation - Choose Destination Location Dialog Box

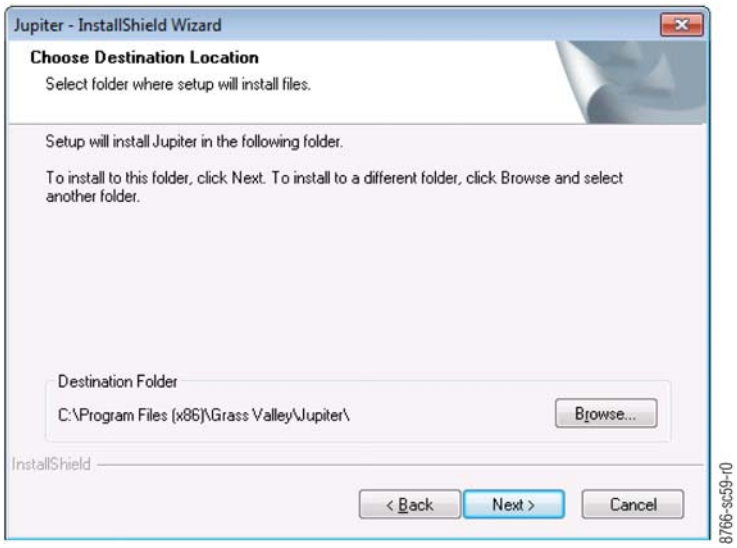

10. Browse to the Destination folder of your choice and then click the **Next** button. The Enter Network Information dialog will then appear (Figure 52).

11. Click the **Yes** button if the letter is correct or if you are not using the Saturn Master Control system. Enter Network Information Screen

12. Select the IP address for the Network card that will communicate with the Jupiter system. This is the IP address that you were asked to obtain earlier.

Note Consult with your Network administrator if you do not know the network values to enter.

- If there is more than one Network card installed, all the cards will appear in the dialog window. Select the preferred network card.
- Enter the Port information in the respective fields

13. Enter the IP address for the Controller boards in the required field and then click the **Next>** button.

14. The **Setup Status** dialog box will then appear (Figure 63) and the progress bar will indicate the setup status.

Figure 63. Jupiter Windows 7 Installation - Setup Status Dialog Box

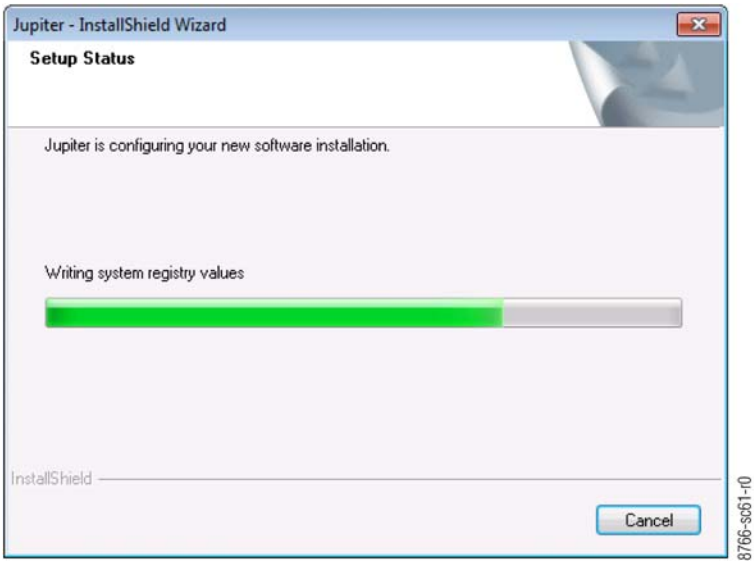

15. When setup is complete, the **InstallShield Wizard Complete** dialog box (Figure 64) will appear. Click **Finish**.

Figure 64. Jupiter Windows 7 Installation - InstallShield Wizard Complete Dialog Box

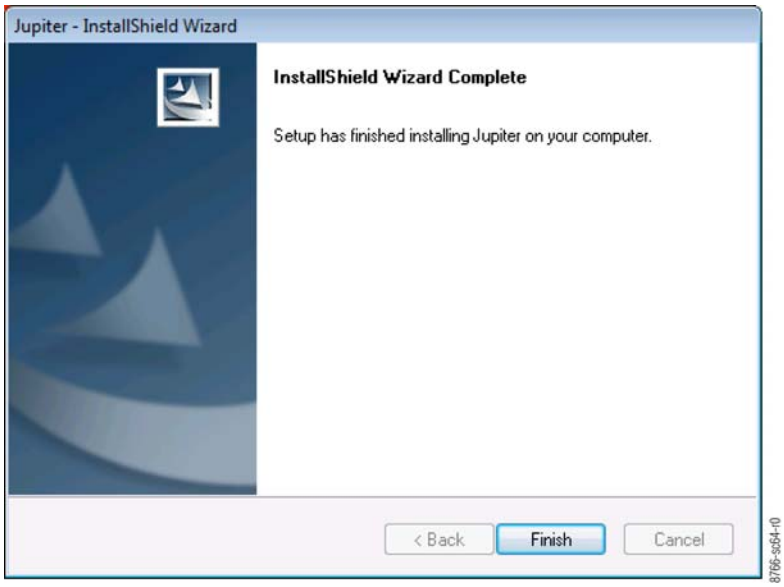

Removing Jupiter Software

You must be logged in as the administrator in order to remove the Jupiter software. This process will not remove existing user-created configuration sets.

Follow these steps to remove the Jupiter software:

1. Start the Control Panel application (Start> Settings> Control Panel).
2. Click the **Add or Remove Programs** icon.
3. Select the Jupiter application from the list of the installed programs.
4. Click the **Change/Remove** button. The InstallShield Wizard welcome screen will appear (Figure 65).

Figure 65. .The InstallShield Wizard-Welcome Screen

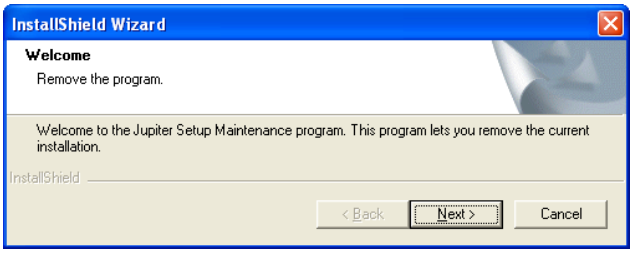

5. Click the **Next>** button to initiate the uninstall procedure. When the uninstall procedure is finished the Maintenance Complete screen will then appear (Figure 66).

Figure 66. .The InstallShield Wizard-Maintenance Complete screen

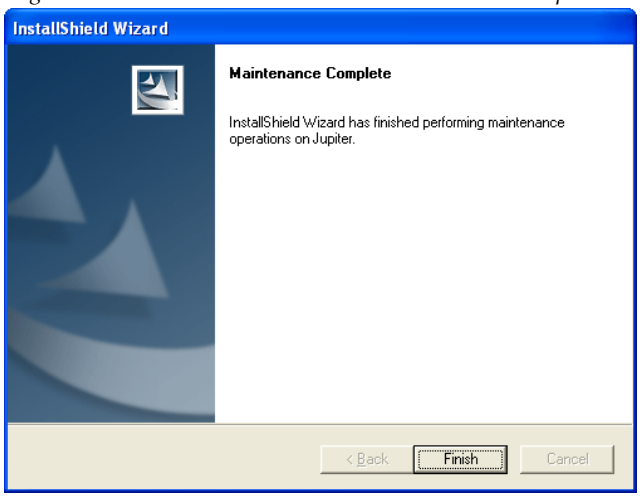

6. Click the **Finish** button.

Section 4

Jupiter Network Suite Control Console

Overview

The JNS Control Console is the application that is used to launch the various Jupiter Network Suite (JNS) programs. It is also used to launch the Jupiter Configuration Editor (also known as the Configurator).

The Jupiter Network Suite is a collection programs that includes:

- Software Control Panel Suite (*Not supported by AccuSwitch*)
- Board Status
- Control Center*
- CP IO Set Editor (*Not supported by AccuSwitch*)**
- Force Unlock*
- JNS Configuration
- Logger* and LogViewer*
- Physical Control
- Physical Diagnostic Utility**
- Physical Remapping Utility**
- Router Control Utility
- Router Save/Restore

** This application cannot be run on a “Remote” PC.

Launching the Control Console

Note The JNS Control Console must be run as administrator.

1. From the Windows Start button, choose **All Programs** and then right-click **Jupiter Network Suite**. A drop-down menu (Figure 67) appears.

Figure 67. JNS Right-click Menu

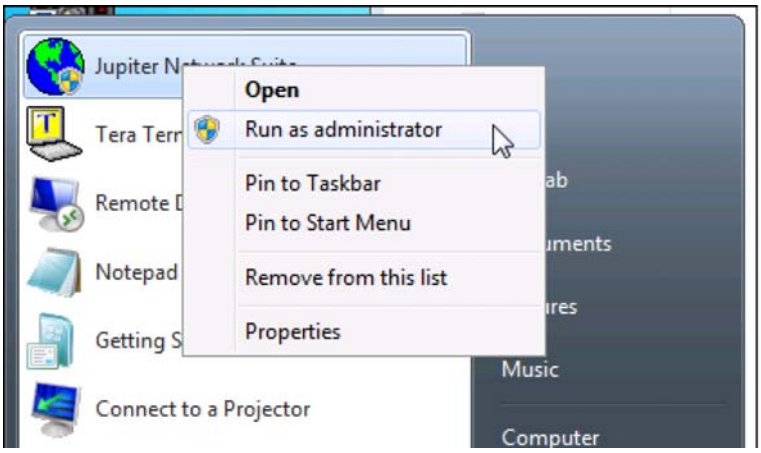

2. Choose **Run as administrator**. The JNS Control Console window (Figure 68) appears.

Figure 68. JNS Control Console

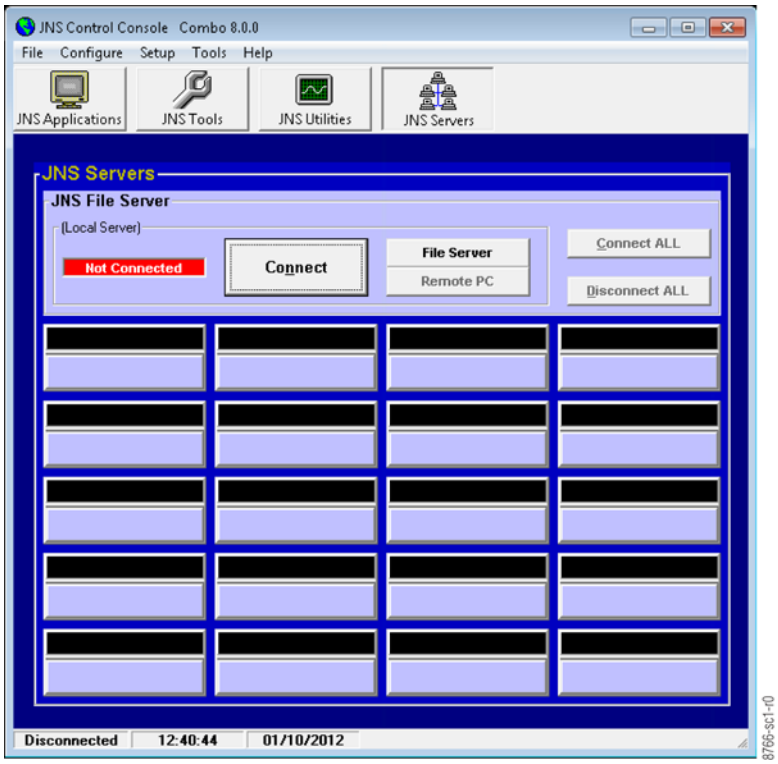

Note The JNS Control Console must be connected, or pointed to the computer that JNS will control. In this example, the File server is the only computer.

3. Click the **Connect** button. A menu similar to that shown in Figure 69 will appear.

Figure 69. JNS Console Connected

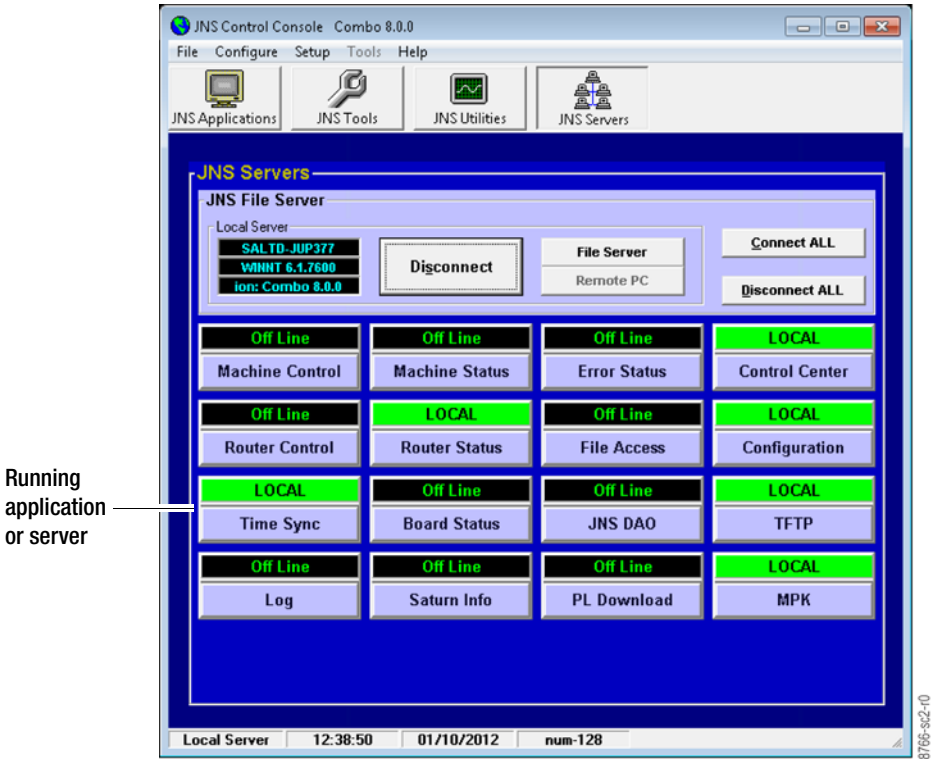

You may need to confirm that the JNS Console.ini file should be created when starting the Jupiter software for the first time. When this happens, you may see an alert which is shown below in Figure 70. This condition is normal at this stage of installation; click the **OK** button.

Figure 70. No Active JUPITER Set Selected

The creation and selection of sets is described in *Configurator Application* on page 109.

Once the JNS is connected, certain JNS servers (programs) on the Jupiter File Server PC will automatically start. The term LOCAL will identify the running programs (see Figure 69). The running programs will also be green. These programs provide the data that is used by the programs in the JNS Applications, Tools, and Utilities groups.

Program Groups

The Program groups are located at the top of the JNS console ().

Figure 71. JNS Console Program Groups

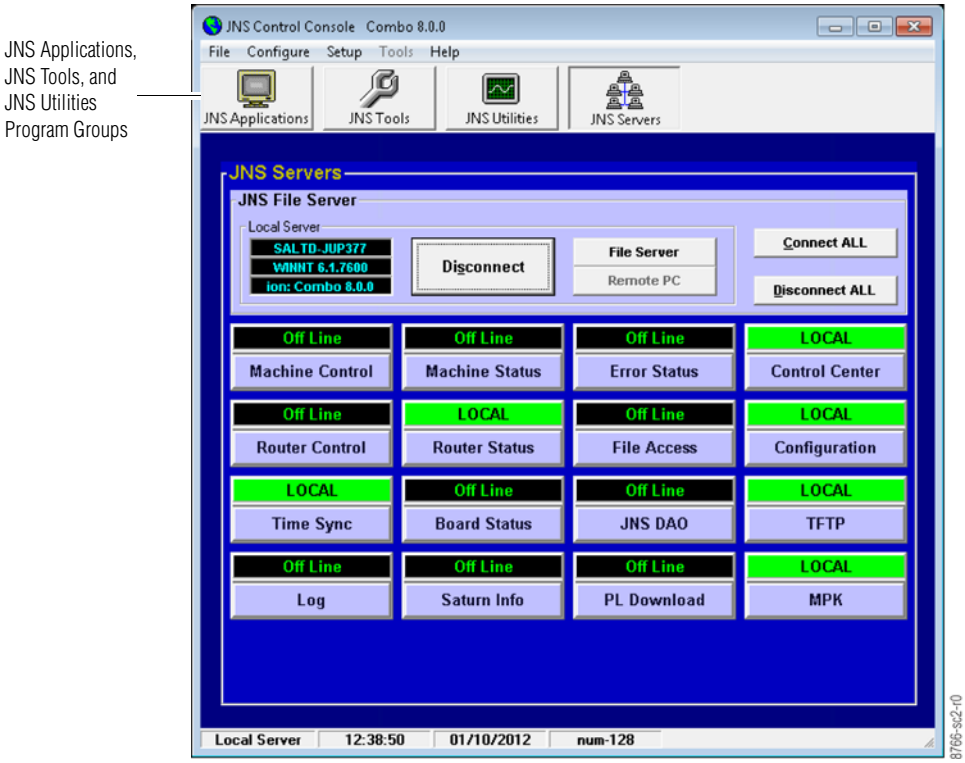

These program groups consist of the following: JNS Applications, JNS Tools, JNS Utilities, and JNS Servers. The features in each of these groups are shown below.

JNS Applications Group

- Control Center
- CP IO Set Editor (*Not supported by AccuSwitch*.)
- Log Viewer
- Logger
- Router Control Utility
- Saturn Monitor Follow & Preview
- Software Control Panel Suite (GUI control panel) (*Not supported by CM-4400*)

JNS Tools Group

- Configuration editor ("Configurator")
- Board Status
- Force Unlock
- Party Line Download †
- Physical Control
- Physical Remapping Utility
- Router Save/Restore

JNS Utilities Group

- Physical Diagnostic Utility

JNS Servers Group

The JNS programs that provide data to Jupiter client programs in the same or other computers are located in the JNS Servers group. For example, Status, Info, and Control information.

Accessing a Program Within a Group

Follow these steps to start a program:

1. Click the appropriate group button. For example, JNS Application, JNS Tool, JNS Utilities, and JNS Servers. In Figure 72 on page 102 below, the JNS Tools group button has been selected.
2. Click the preferred program's button. The Configuration Editor has been selected in this example.

Figure 72. The Configuration Editor in the JNS Tools Group

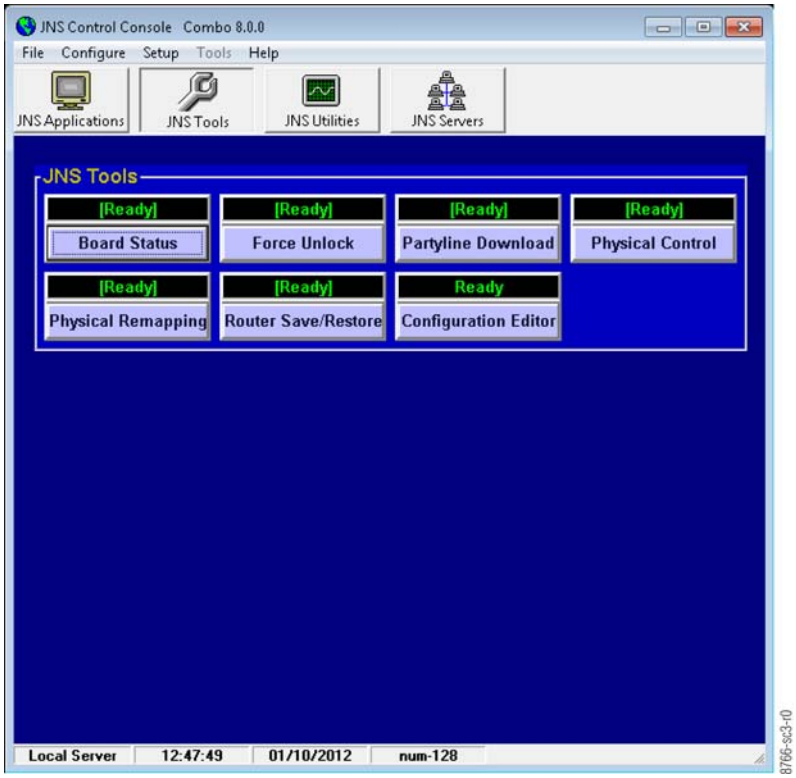

The Configuration Editor will then appear.

Figure 73. The Configuration Editor Start Screen

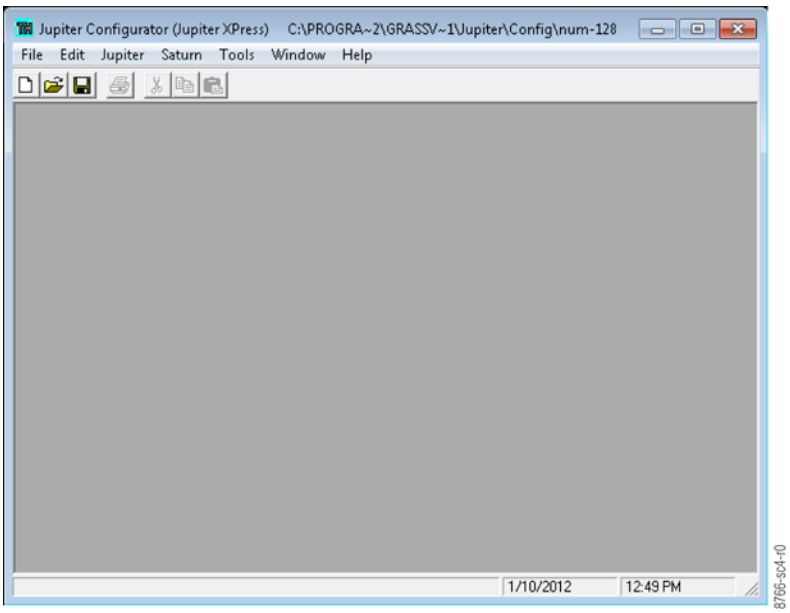

Note When the Jupiter system is initially set up, the Configuration Editor MUST be the application that is selected first. This application is described in *Configurator Application* on page 109.

Jupiter Settings Dialog Box

You must set the Subnet Mask and Gateway IP addresses to run Jupiter AccuSwitch on the CM-4400; these settings are not required on the CM-4000.

Follow these steps to set the Subnet Mask and Gateway IP addresses:

1. Open the Jupiter Network Suite (JNS).
2. Select the Jupiter Settings option from the Tools menu (Tools> Jupiter Settings). The Jupiter Settings dialog will then appear.

Figure 74. The Jupiter Settings Dialog Box

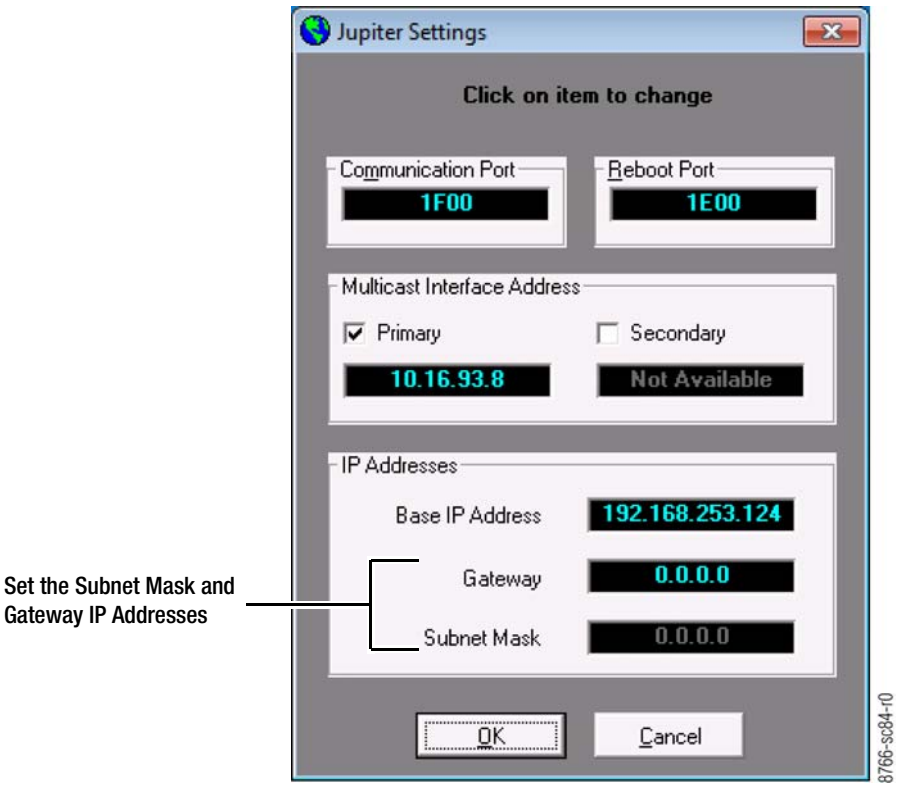

3. Enter the Subnet Mask and Gateway IP Addresses for your system. See your System Administrator for this information.

Note Grass Valley recommends that you enter the IP address of your Jupiter PC and use 255.255.255.0 for the Subnet Mask if there is no Gateway. However, only enter this information if your System Administrator does not provide the needed information.

4. Click the **Ok** button to apply the changes.

Restart Procedures

There are four ways to reset the CM-4400 controller (these steps are listed in the preferred order of operation):

1. Selecting the Reboot option in the Jupiter software. Refer to *Selecting the Reboot Option* on page 105.
2. Pressing the front panel **Reset** button. Refer to *Front Panel Reset Button* on page 106.
3. Power cycling the CM. Refer to *Power Cycling* on page 107.
4. Using the Console port. Refer to *Console Port* on page 107.

Note During a restart, the CM will test itself and, depending on the result, may request a new download from the file server.

Selecting the Reboot Option

There are two methods to rebooting the Control module, both methods are described below.

Configuration Tab

Follow these steps to select the Reboot option:

1. Start the Control Center (Go to Start > Programs > Jupiter Network Suite > JNS Applications > Control Center).
2. Select the Configuration tab.

Figure 75. The Configuration Tab of the Control Center Application

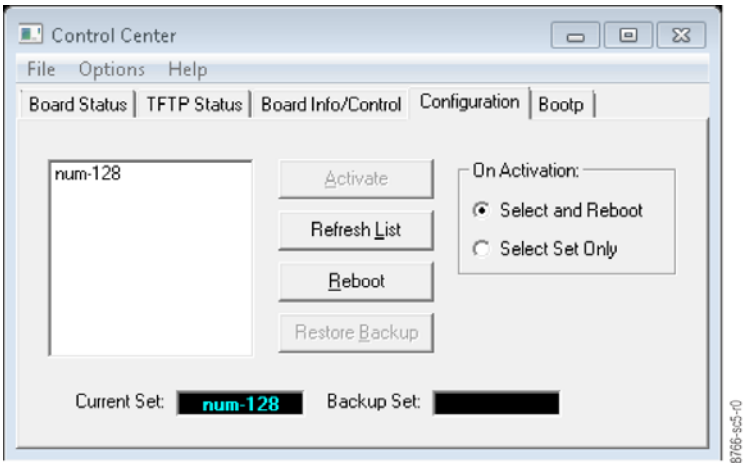

3. Click the **Reboot** button in the middle of the Control Center dialog (Figure 75). This will reset all controllers in the system.

Board Info /Control Tab

Follow these steps to select the Reboot option:

1. Start the Control Center (Go to Start > Programs > Jupiter Network Suite > JNS Applications > Control Center).
2. Click the Board Info /Control tab.

Figure 76. The Configuration Tab of the Control Center Application

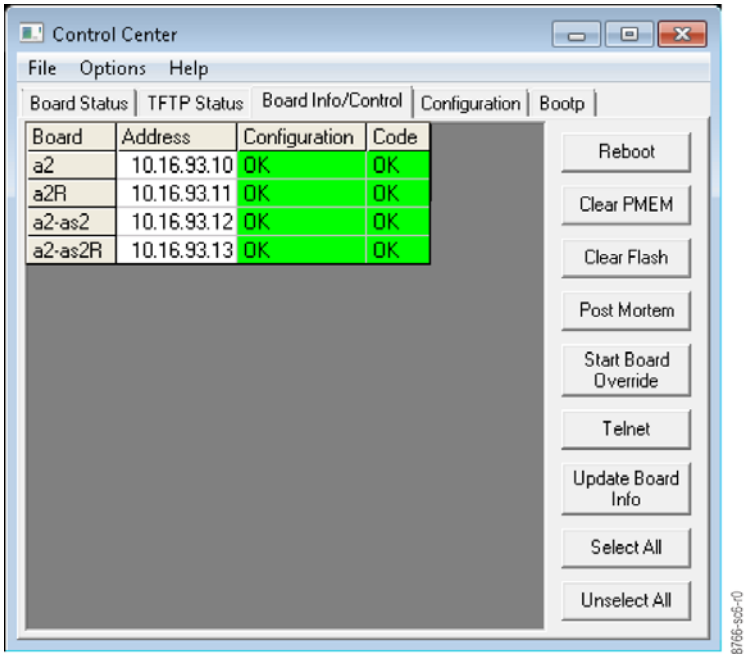

3. Select the board that you want to reset.
4. Click the **Reboot** button, at the top of the list of buttons on the right side of the dialog.

Note Having different versions of software or configuration tables between boards can cause instability in the system.

Front Panel Reset Button

Follow these steps to reboot the CM-4400:

1. Remove the front cover, by removing the two screws (Figure 77).

Figure 77. The Front panel of the CM-4400

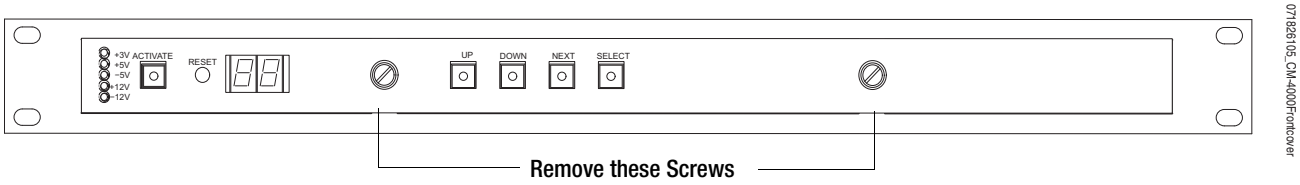

2. Select the **Reset** button on the front of the CM-4400 (Figure 78).

Figure 78. The Reset button on the front of the CM-4400

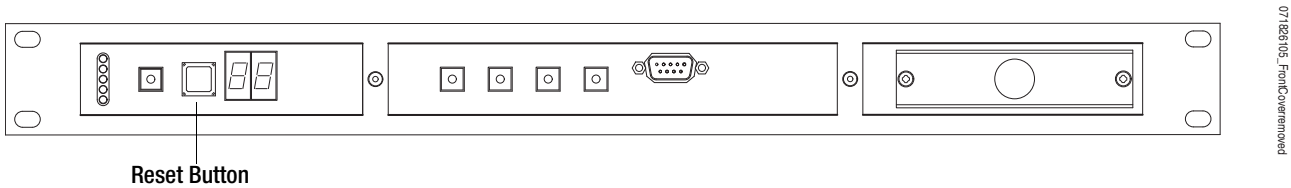

The above steps are the preferred method for pressing the **Reset** button. However, there is a hole on the front cover in which you can stick a narrow object (for example, pen, pencil, or small screwdriver) to reset the CM-4400 without removing the front cover.

Power Cycling

If the two methods described above do not restart the CM, you can unplug the power cord; you will then need to plug the power cord back in to the power socket.

Console Port

All boards can be reset by momentarily shorting pin 7 to pin 5 on the Console port. This is the least preferred method.

Note The Console connection is provided for test purposes.

Figure 79. The Console Port on the front of the CM

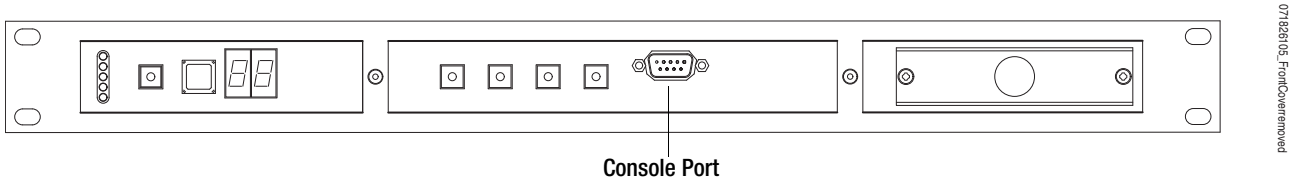

Clearing Persistent Memory (PMEM)

The Persistent Memory (PMEM) is cleared by selecting the Clear PMEM button on the Board Info /Control tab of the Control Center Application. For more information about the Control Center, see *Jupiter Network Suite Control Console* on page 97.

When the PMEM is cleared, all switcher status will be lost (no switches will take place). The switcher status will not be restored until the switches are

manually re-taken. In addition, the links to the control panels will have to be re-established.

Follow these steps to clear the Persistent Memory (PMEM):

1. Start the Control Center (Go to Start > Programs > Jupiter Network Suite > JNS Applications > Control Center).
2. Click the Board Info /Control tab (Figure 80).

Figure 80. The Configuration Tab of the Control Center Application

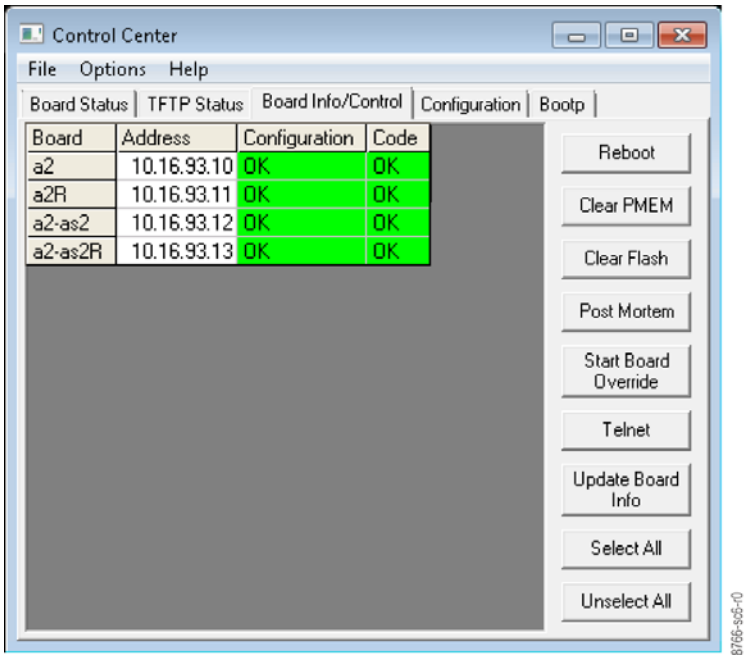

3. Select the board that you want to clear.
4. Click the **Clear PMEM** button.

After the PMEM has been cleared, the boards will automatically reset.

Section 5

Configurator Application

Overview

Following a hardware and software installation, all connections to the Jupiter system including those for control, video, audio, and any other connection, must be identified and described in a Configuration Set. This Configuration set consists of a collection of user-defined tables. The Configuration Editor (the Configurator), is the editing program that is used to create and edit these tables. The Configurator application is designed to eliminate manual entry of repetitive information and to operate in a, "Windows-like" environment. Editing features include search, error detection and on-screen help, column/row copy/paste, and column/row auto-fill with incremental numbers.

Note If your Jupiter equipment was purchased from Grass Valley as a "turnkey" system, you may wish to refer to the Jupiter Getting Started Guide, which will provide an abbreviated version of the information in this section.

Starting the Configurator Application

You must have administrator privileges in order to load Jupiter software, launch Jupiter applications, and configure the system. The same login should be used for all tasks performed on the Jupiter file server, including removing the software.

Note When logging on as the Administrator, you may notice that the welcome screen does not always show an Administrator icon. Press the **Ctrl-Alt-Del** keys and then type "Administrator" in the *Username* field of the dialog box to log on as the Administrator.

This procedure assumes that Windows has been started.

Follow these steps to start the Configurator application:

1. Navigate to the Jupiter Network Suite (Start > All Programs > Jupiter Network Suite OR click the **JNS** icon). The JNS Control Console will then appear.

2. Click the **Connect** button (Figure 81). JNS will then connect to the Control module.

Figure 81. The Jupiter JNS Control Console

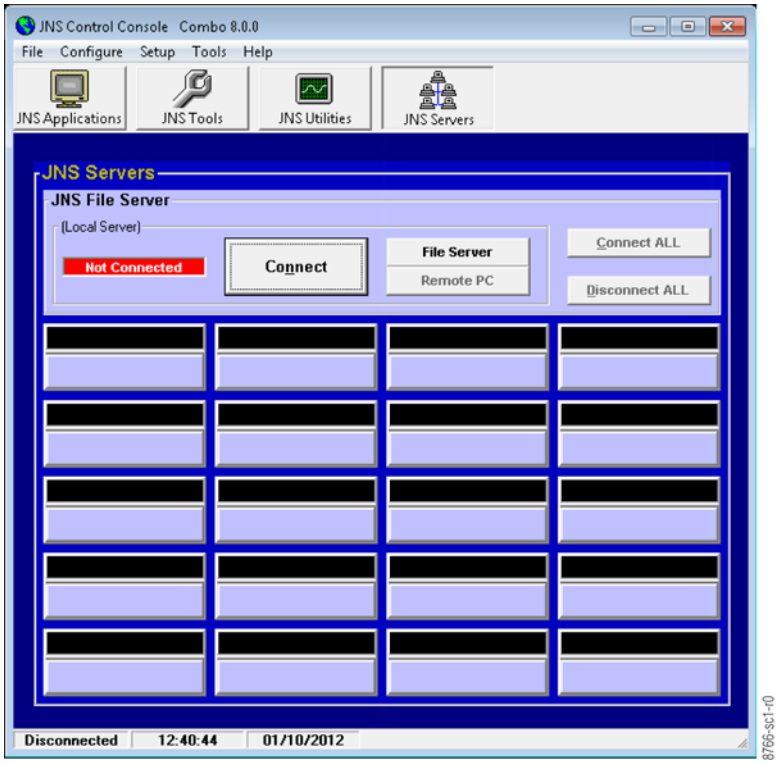

3. Click the **JNS Tools** button that is below the menu bar. The JNS Tools launch screen will then open.

4. Click the **Configuration Editor** button.

Figure 82. The Jupiter JNS Control Console

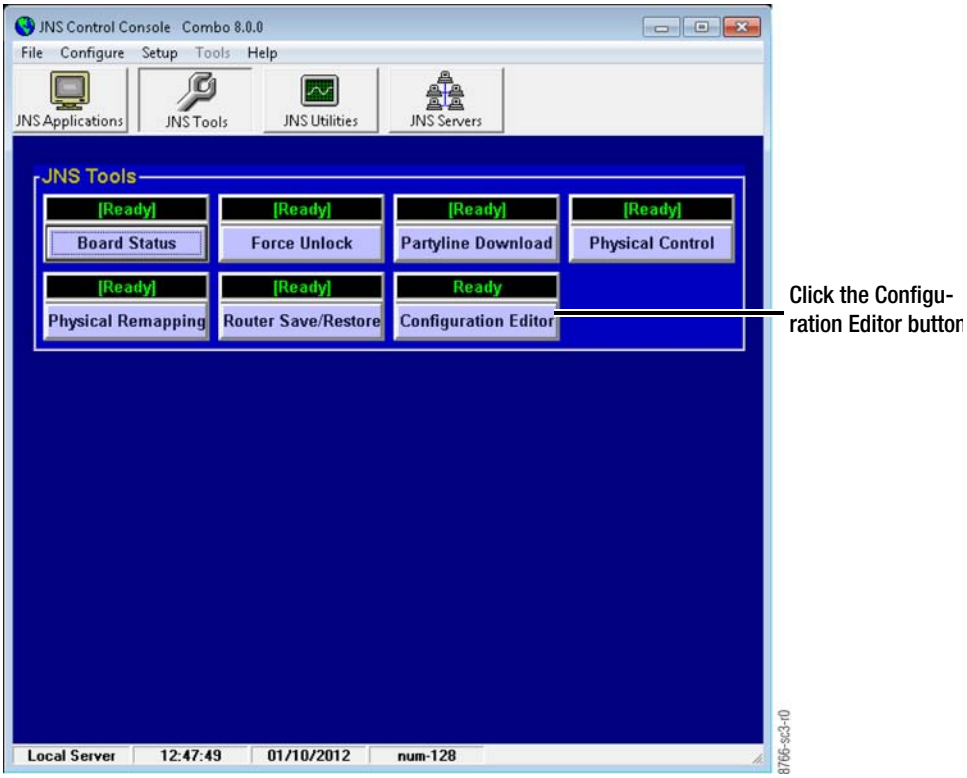

The Jupiter Configurator will then open. When the widow first opens, it will appear to be blank (Figure 83 on page 112).

Note If you are an experienced Jupiter user, and wish to check the routing switcher as quickly as possible, see *Use Numeric Sets for Quick Switcher Checkout* on page 205.

Figure 83. The Jupiter Configurator

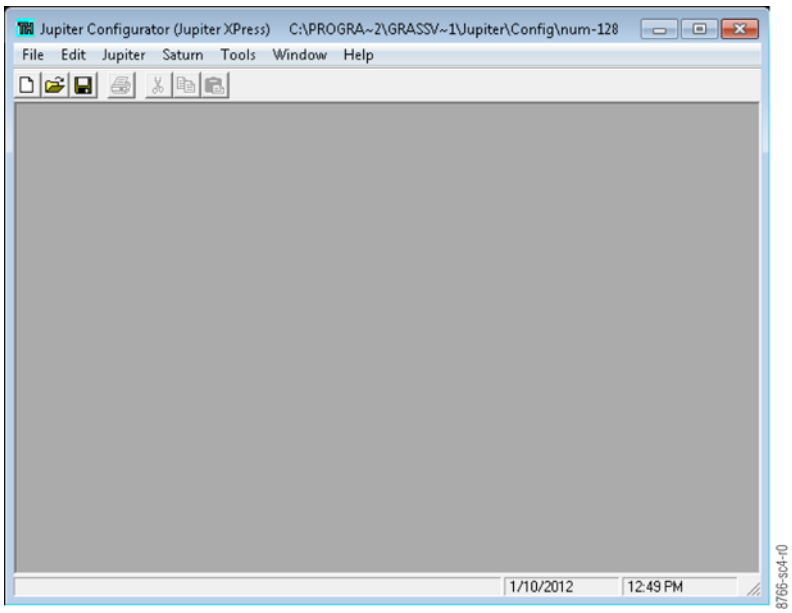

- Use the *Open* command (File > Open) to select an existing configuration set; the full path and name of the set will appear in the window's title bar.
- Use the *New* command (File > New) to create a new set.

The last set that was used will be opened automatically when Configurator is started again.

AccuSwitch Configuration File

When a Configuration set is activated from the Control Center a zipped copy of the configuration will be downloaded to the AccuSwitch control board. Uploaded sets, which are named _Active.zip and _Prev.zip, are placed in the Jupiter\Logdata directory.

In order to work with an uploaded set, you will need to use the existing Unzip Configuration Set menu option (Tools > Unzip Configuration Set menu) to unzip the _Active.zip and _Prev.zip files. You should rename the configuration to avoid any conflicts the next time a Configuration file is uploaded. You can then edit and compile the set as you would any other set.

Note There will not be a _Prev.zip file when only one configuration has been sent to an AccuSwitch control board.

A Clear Flash command will remove the Previous Configuration file on an AccuSwitch board. However, a Clear Flash command, on a Jupiter Xpress board will not remove the Previous Configuration file.

Configure a New Set

Note For more information about each of the tables, see the specific table description in this chapter.

The tables that are needed to configure a new set are:

- The Network Description table
- The Serial Protocol table
- The Switcher Description table
- The Switcher Input table
- The Switcher Output table

Create Control Panel Sets

The Control Panel Set dialog provides inputs, outputs, levels, sequences and overrides to the Jupiter Control Panels (CP) in the system.

Export a Configuration Set

You can export a Configuration set to use it on another machine. You must have a configuration set open.

Follow these steps to export a Configuration set:

1. Select the Zip Configuration Set option from the Tools menu (Tools> Zip Configuration Set). The Zip Configuration Set dialog will then open

Figure 84. Tools – ZIP Configuration Set

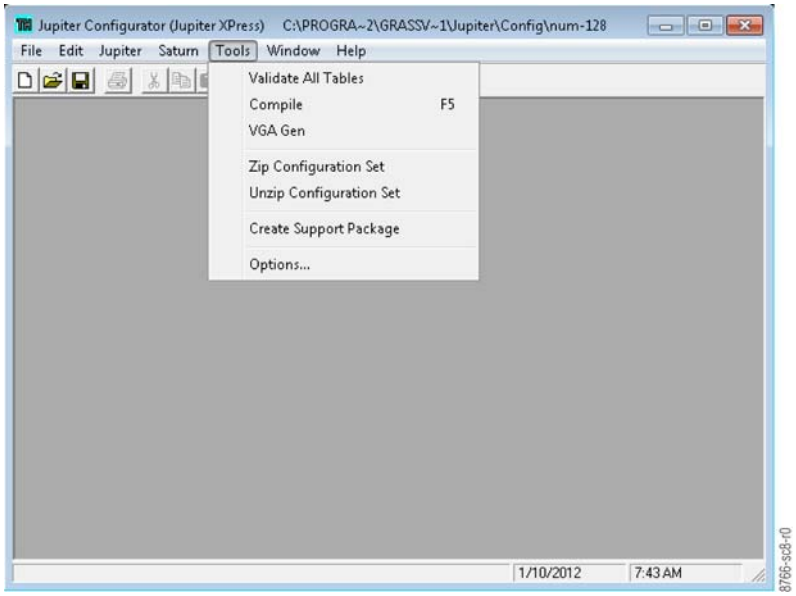

2. Select the preferred Configuration set from the list. In Figure 85 the test2 option is selected.

Figure 85. The Zip Configuration Set Dialog

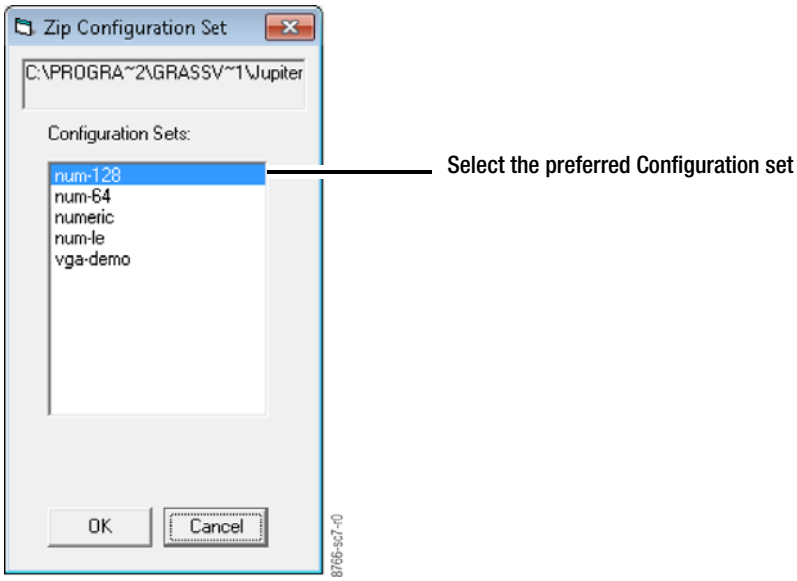

3. Click the **OK** button. The Zip Configuration Set Save dialog will then open. This dialog is similar to the Window's Open dialog.
4. Browse to the location to which you want to save the Configuration set.
5. Enter the preferred name for the Configuration set in the File name text box (Figure 86 on page 115).

Figure 86. The Zip Configuration Set Save Dialog

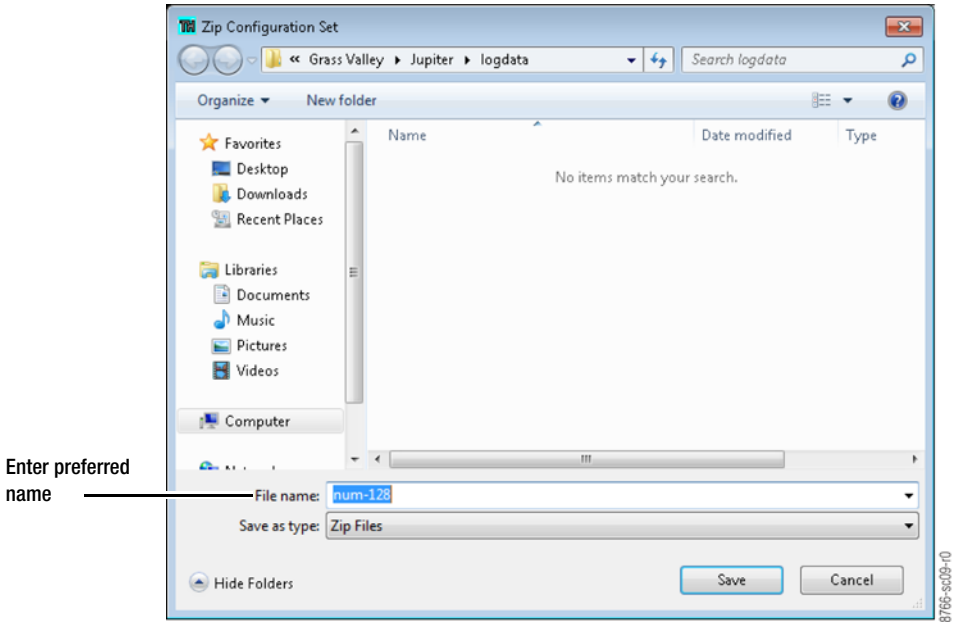

6. Click the **Save** button. The Zip Configuration Set Information dialog will then open.

   The dialog will say, *The "<Configuration set name>" set was successfully zipped.* See Figure 87.

Figure 87. The Zip Configuration Set Information Dialog

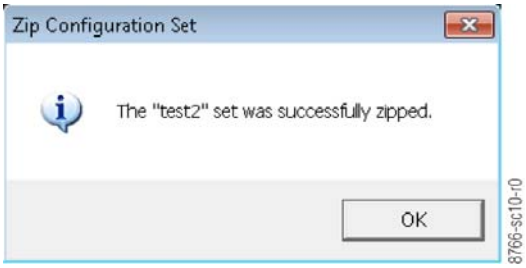

7. Click the **OK** button. The dialog will then close and the Configuration set has been exported.

Upload a Configuration File

The Configuration Info and Set Upload application will upload the active configuration from a specified Control Module (CM). When you select a CM-4400 and then select the Upload Source option (Tools > CM4400 Configuration Info and Set Upload), the current _Active.zip file (Jupiter\Logdata_Active.zip) is deleted and the new _Active.zip and _Prev.zip files will then automatically be sent to the Jupiter File Server using TFTP. The

Jupiter "Configuration Editor" is used to unzip, open, edit, and compile the Current or Previous sets.

Follow these steps to upload a Configuration File:

1. Run the Jupiter Network Suite (JNS) (For example, Start> Programs> Jupiter Network Suite).
2. Select the CM-4400 Configuration Info and Set Upload option (Tools> CM-4400 Configuration Info and Set Upload) from the JNS Console.

Note The Tools menu is only enabled when the JNS Servers are disconnected.

Figure 88. The CM-4400 Configuration Info and Set Upload option

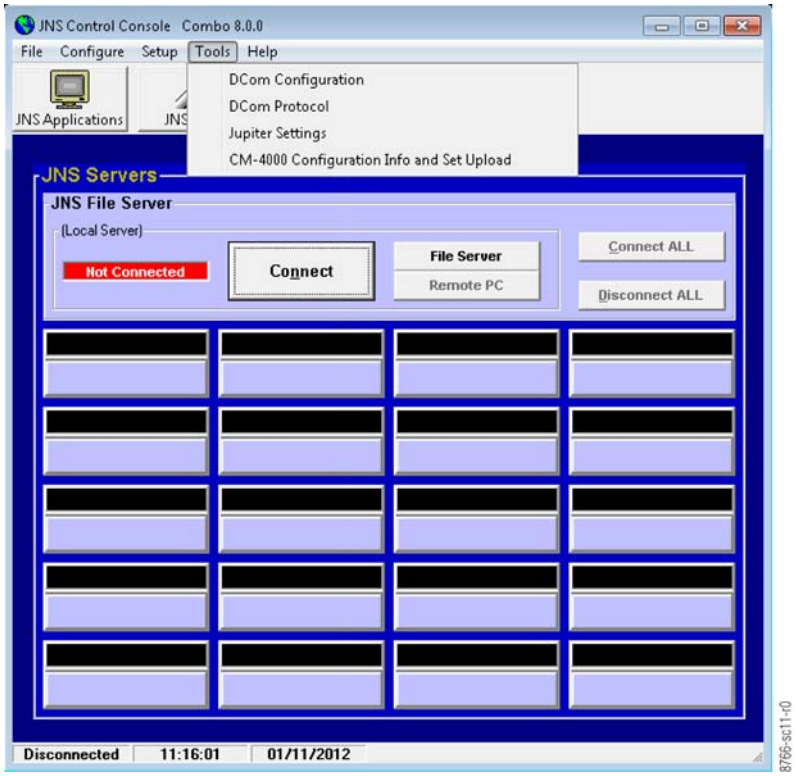

The CM-4400 Configuration Information screen will then appear. Information for each active CM-4400 on the PC's subnet that is running is displayed.

Figure 89. The CM-4400 Configuration Information screen)

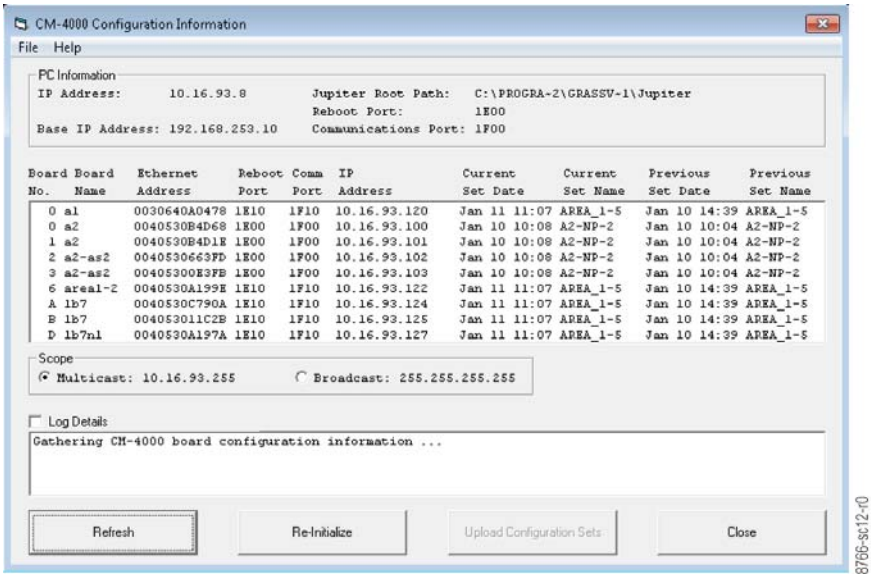

3. Click the **Broadcast** button if all CM-4400s are not listed. All running CM-4400s that are connected to the network should then be displayed regardless of subnet.

Note If you do not see any CM-4400s listed when the **Multicast** button is selected, you may need to set the Gateway and Subnet Mask in the Jupiter Settings. Go to "Tools > Jupiter Settings." Then fill in the Gateway and the Subnet Mask. After editing and saving your changes, you may need to reboot the CM-4400s in order to see them listed for the multicast scope.

4. Select one of the CM-4400s and then click the **Upload Configuration Sets** button.

Figure 90. The CM-4400 Configuration Information screen)

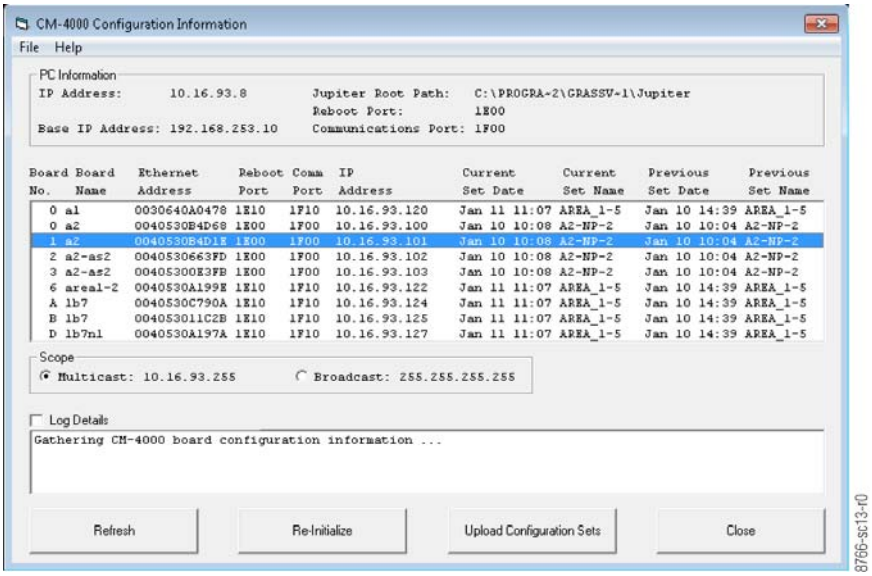

5. The current active configuration set will then uploaded as _Active.zip and the previously active set will then be uploaded as_Prev.zip. A message will inform you when the available sets have been uploaded.

Unzip, Open, Edit, and Compile the Configuration Set

Follow these steps to unzip, open, edit, and compile the current Configuration set:

1. Start the Jupiter "Configuration Editor" and then open the Current Set (_Active.zip) or the Previous Set (_Prev.zip).
2. Use the Save as (File> Save as) menu option to save the set to a preferred name.
3. Make the changes, that is unzip, open, and edit.
4. Save and then compile the Configuration set.

Configuration Error Check – CPES-SER Device Type

The Jupiter Configurator application will now perform an error check for a proper configuration of a CPES-SER Device type.

When there is a Device type of CPES-SER in the MPK Devices Table; then the corresponding Port must be defined as an "ESCP (ES-Control Panel)" in the Serial Protocol Table. If this is not the case, then the Board and the Port in the MPK Devices Table will appear red (Figure 91).

Figure 91. Board and Port Error Message in the MPK Table

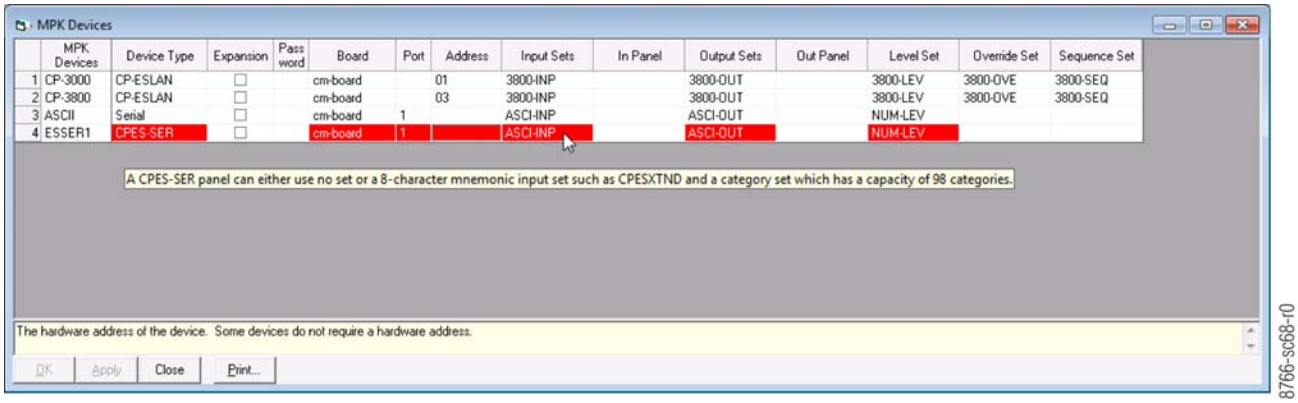

8766-sc68-r0

The following message will appear when you hold your mouse over the red colored area:

```
This type of device requires ESCP protocol on the port
to which it is connected.
```

Access Jupiter Tables

The Jupiter tables are Windows-style menus. These menus are used to configure the various components of the system.

Follow these steps to access Jupiter tables:

1. Select the Jupiter drop-down menu. The Jupiter menu, with a list of commands will then appear (Figure 92).

Figure 92. The Jupiter Menu

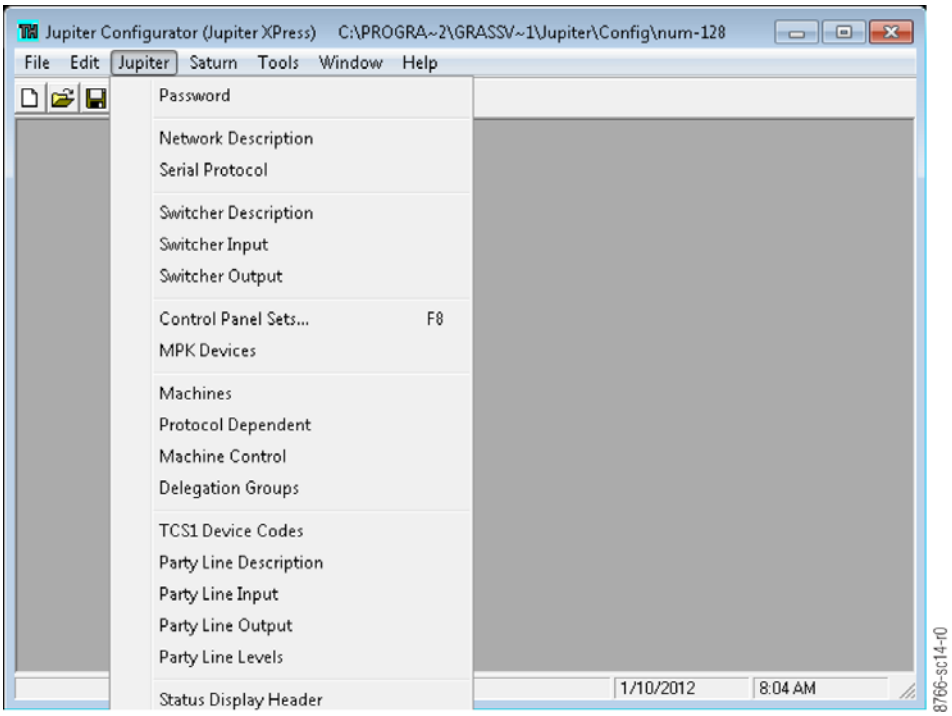

2. Select the table that you would like to display. For example, if you select the Network Description table the display will be similar to the following (Figure 93).

Figure 93. The Jupiter Menu - Network Description Table

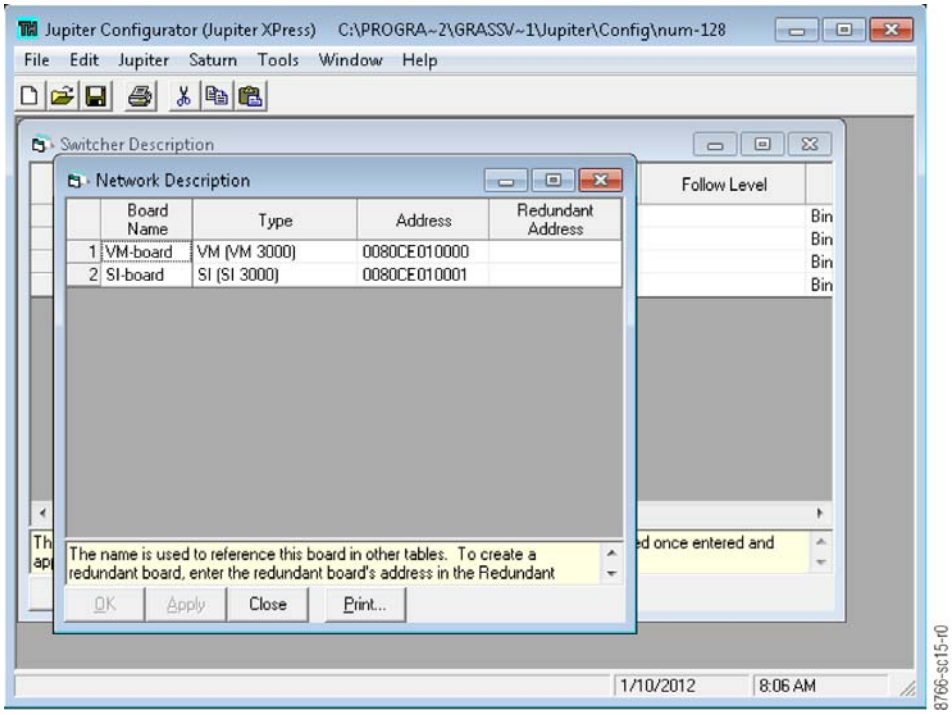

If a password entry menu appears, it means that a Jupiter password (other than the factory default of “999999”) has been set. Enter the authorized password and then click the **OK** button. The password system is discussed in *Passwords* on page 144.

The configuration set should now be edited as appropriate and made active (downloaded) as described in the *Configurator Editing Guidelines* section.

Close Configurator Application

To close (or quit) the Configurator application, select the Exit option from the File menu (File > Exit) or click the Close Box (The red X) in the upper right-hand corner of the window.

There is no need to leave the Configurator loaded after compiling; other than for your convenience. However, the JNS application should be left running and the download connection to the CM-4400 System Controller should be left in place. This practice is in case the CM-4400’s controller board requests a fresh download of data from the file server.

Configurator Editing Guidelines

This section describes the options that are available to expedite the data-entry process and eliminate common errors such as differences in spelling and entry of inappropriate data.

Automatic Table Entry

This option will expedite the data entry process and eliminate errors due to differences in spelling and entry of inappropriate data.

In cases where a controller board or device must be entered on more than one table, the information entered on the initial entry table will be automatically copied (or can be copied as a selectable item) to all secondary tables (including Saturn tables).

Entering information in the same order as the tables appear in the Jupiter drop-down menu will eliminate most repeat entries. For example, when a CM-4400 is entered on the Network Description table, the name will be added automatically to the Serial Protocol table.

Note You cannot enter data on secondary tables first. For example, you must enter a new VM on the Network Description table. Again, data should be entered in the same order as the tables appear in the pull-down menu.

When certain items are deleted, the Configurator application will automatically delete the corresponding entries on other tables when appropriate. For example, when the name of an input is deleted from the Switcher Input table, the input will be deleted automatically from the other corresponding tables. The same is true for an output deleted from the Switcher Output table. For instance, if the VTR12 row on the Switcher Input table is deleted, the corresponding row on the CP Input Set table (the row defining the category/number keys and mnemonic) will be deleted as well.

Enter/Edit Information in a Jupiter Table

Note New entries should be made at the bottom of tables whenever possible to avoid disrupting system operation. If entries are made to the middle of tables you must be prepared to clear battery-protected memory (Pmem) in the CM-4400 and re-establish switcher status and machine links. Clearing Pmem is described in *Clearing Persistent Memory (PMEM)* on page 107.

Follow these steps to Enter or Edit information in a Jupiter Table:

1. Select the preferred field using the mouse, the Arrow keys, or the **TAB** key.
2. Enter or edit the information.

Auto Complete Feature

- The editor will Auto Complete or suggest the remaining letters of a word, that has been used before.
- To accept the auto completed entry, press the TAB key; otherwise, continue typing the new entry.

Drop-Down Lists

- When a field requires a selection to be made from a fixed list, click anywhere in the field to cause a drop-down arrow to appear.
- Click the drop-down arrow to show the list of available choices (or press the **ALT+DOWN** key combination).
- Select the preferred choice. (You can also enter the first letter in the list item name; enter the letter again to move to the next item that starts with that letter, then press the **ENTER** key.)

Error Detection and Explanation

- Cells that contain insufficient or inappropriate information will be highlighted in red.
- Moving the cursor over the field will cause a Help window to appear.

3. Press the **TAB** key to accept the change and advance to the next cell.
4. Press the **ENTER** key when you want to add a new row and to advance to that row.
5. Click the **Apply** button to save the changes in memory (However, changes are not saved to disk until they are saved by selecting File> Save).

Note If you attempt to edit another table before applying your changes, a pop-up message will appear asking you to confirm or abandon the changes you have made before editing a new table.

6. Select the Save option from the File menu (File > Save) after Applying all changes. The message “Exporting...” will appear.

For best practice, use letters and numbers only when creating a name for a Jupiter set, table, control panel, or other device. In some cases spaces are not allowed in names and will not be entered.

Note You can quit the program without having the changes bring applied by selecting the Exit command from the File menu (File > Exit) and then selecting the **No** button.

Navigate and Copy Rows

The table below displays the key strokes that can be used to navigate and copy rows.

Table 4. Navigating and Copying Commands

Commands	Descriptions
Ctrl+Down-Arrow key combination	Pressing the Ctrl+Down-Arrow key combination will jump the cursor to the bottom of a table.
Ctrl+Up-Arrow key combination	Pressing the Ctrl+Up-Arrow key combination will jump the cursor to the top of a table.
Page Down button	Pressing and holding the Page Down key will scroll to the bottom of a table. You can also "drag" the scroll box, or click and hold on the scroll bar.
Insert Key	Will add a row to insert information. To add rows to the bottom of the table: • Select the row number boxes of the source rows (the rows selected must form a single rectangle). • Copy the rows • Go to the bottom of the page. • Press the INSERT key. • Paste the information into the row.

Note To copy rows and insert them in the middle of a table, see *Reorder Jupiter Tables* below.

Reorder Jupiter Tables

CAUTION Changing existing Jupiter tables, can be very disruptive if not done carefully. The order of entries in certain tables is significant because row numbers are used as cross-references to other tables. If data is moved from one row to another, these relationships may be broken and system operation will be unpredictable.

Add new items at the end of the table if possible. If you wish to reorder table data then you must be prepared to clear battery-protected memory (Pmem) in the system controller and re-establish switcher status and machine links. Clearing Pmem is described in *Clearing Persistent Memory (PMEM)* on page 107.

Insert a Row

Follow these steps to insert a new row in the middle of the table:

1. Click the numbered row box above the row where the new row is to appear.
2. Press the **Insert** key on the Key board. (Or, select the Insert Row option from the Edit menu.) The Row will appear below the selected row (Figure 94 on page 124).

Figure 94. Inserting a New Row In The Middle of the Table

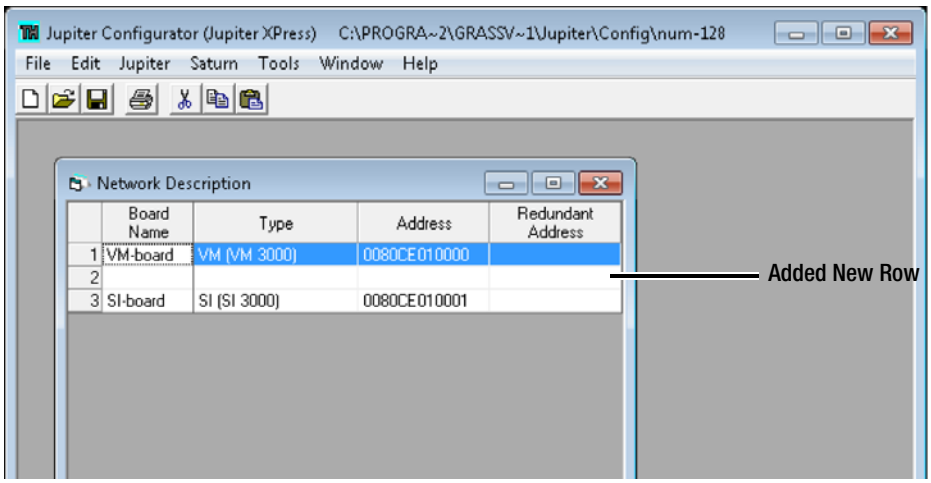

Delete a Row

Follow these steps to delete an entire row:

1. Click the row number box.
2. Press the **Alt+Del** keys on the keyboard. (Or, select the Delete option from the Edit menu.) The selected row will then be removed.

Re-order a Table

Follow these steps to re-order a table manually.

1. Select the row number boxes of the source rows that you wish to cut. Make a note of how many rows you have selected. (The rows that are selected must form a single rectangle.)
2. Cut the rows from the table using the Cut option from the Edit menu.
3. Select the row number box above where you want to paste.
4. Press the **Insert** key once for each source row that was cut.
5. Paste the rows using the paste option from the Edit menu.

Copy and Paste Rows

Follow these steps to copy rows from one Jupiter table to another:

1. Select the row number boxes of the source rows that you wish to copy. Make a note of how many rows you have selected. (The rows that are selected must form a single rectangle.)
2. Copy the rows using the copy option from the Edit menu.
3. Navigate to the destination table.
4. Select the row number box above where you want to paste.

5. Press the **Insert** key once for each source row that was copied.
6. Paste the rows using the paste option from the Edit menu.

Note If you use this procedure without inserting blank rows, the existing rows will be overwritten.

Find/Fill/Increment

The Find, Fill, and Increment options assist with searches, pasting repetitive information, and automatically incrementing numbers.

Find Command

The Find command searches for a text string in all open tables.

Follow these steps to search for a text string:

1. Select the Find command from the Edit menu. The Find dialog will then appear.

Figure 95. The Find Dialog

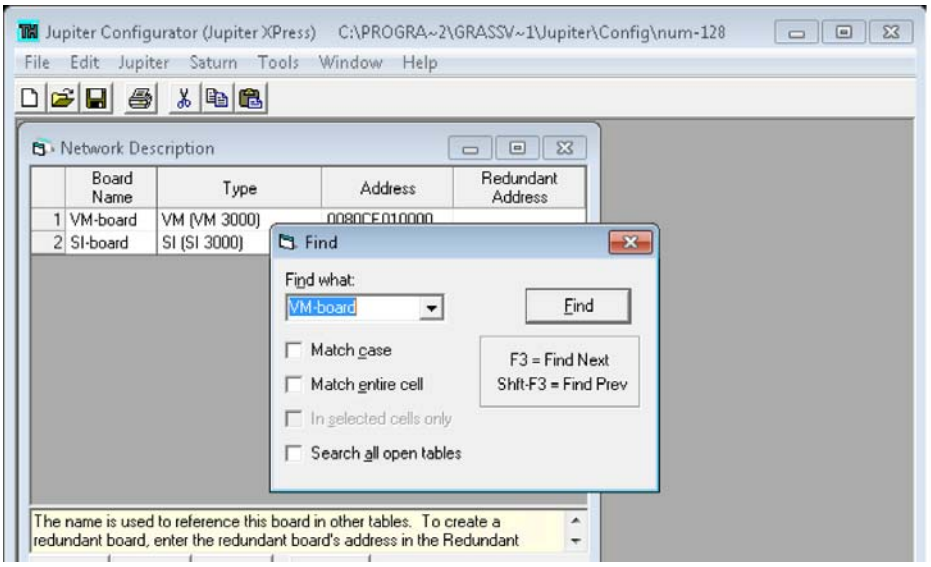

2. Enter the text that you wish to search for in the *Find what* field.
3. Select the check box associated with any of the provided filters. The filters are located below the *Find what* field.
4. Click the **Find** button.
   - Press the **F3** key to find the next instance of the text.
   - Press the **Shift+F3** key combination to find the previous instance of the text.

Fill Command

The Fill command is a copy/paste function for use with tables containing repetitive material.

Follow these steps to copy/paste repetitive material:

1. Select the row number box above where you want to paste.
2. Press the **Insert** key once for each source row that you want to add.

Figure 96. The Selected and Added Rows

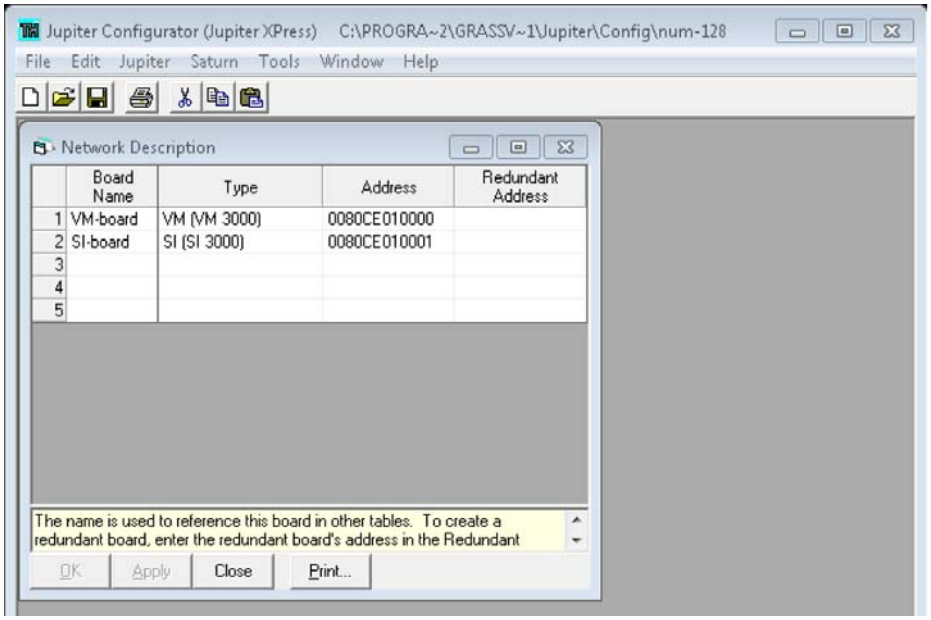

3. Select the appropriate Fill command from the Edit menu.
   - Edit > Fill Right to fill information to the cells to the right.
   - Edit > Fill Down to fill information to the cells below.

Increment Command

The Increment command is used to automatically create incrementing numbers in columns to the right or rows below as preferred. For example, on the Switcher Input table you could enter the text SRC-0 in the Logical Input Name column, which is located in the top left of the table. Then selecting the preferred fields (the whole column in this example) and then the Increment Down (Edit > Increment Down). This selection will fill the rest of the column with SRC- 2, SRC- 3, and so forth, to the bottom of the table.

Follow these steps to created incrementing numbers:

1. Enter numbered text in a column.

2. Select the rows that you want to increment.
3. Select the appropriate Increment command from the Edit menu.
   - Edit > Increment Right to increment the numbers in the cells to the right.
   - Edit > Increment Down to increment the numbers in the cells below.

Figure 97. The Increment Down Command

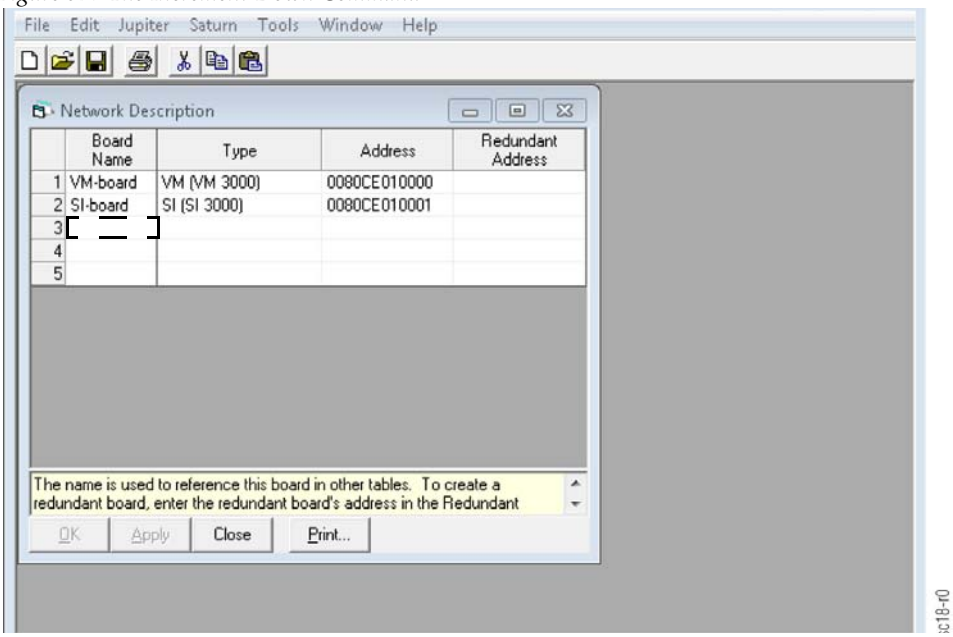

4. Select the appropriate Fill command from the Edit menu.
   - Edit > Fill Right to fill information to the cells to the right.
   - Edit > Fill Down to fill information to the cells below.

Copy and Paste a Block

CAUTION Changing an existing Jupiter table can be very disruptive if not done carefully. The order of entries in certain tables is significant because row numbers are used as cross-references to other tables. If data is changed from one row to another, these relationships may be broken and system operation will be unpredictable.

Blocks can be copied and pasted using the copy and paste command.

Follow these steps to copy a block:

1. Select the block of the source fields (the fields selected must form a single rectangle).
   - To select an entire column, click the name of the column. Click anywhere outside the column to cancel the selection.
   - To select an entire row, click the number of the row. Click anywhere outside the row to cancel the selection.

Figure 98. Using the Copy Command

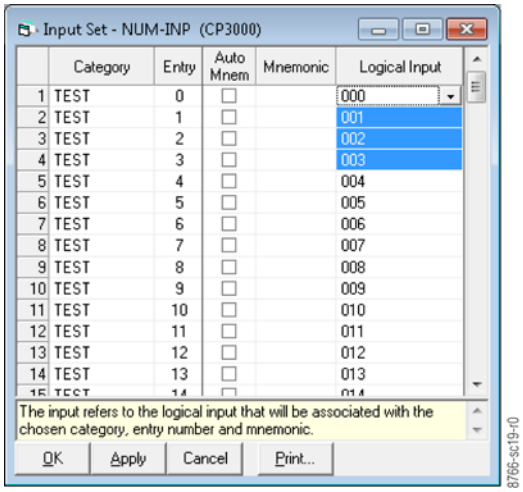

2. Use the copy command under the Edit menu (Edit> Copy).
3. Select the destination area. In this case, the paste command will overwrite the existing text.
4. Use the paste command under the Edit menu (Edit> Paste).

Figure 99. Using the Paste Command

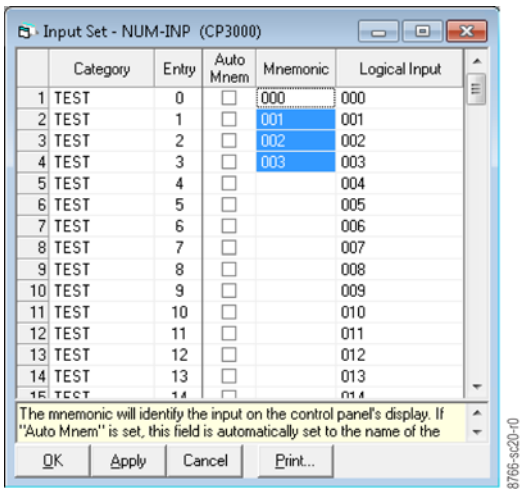

The blocks will then be pasted.

Copy and Paste Rows

CAUTION Changing existing Jupiter tables, can be very disruptive if not done carefully. The order of entries in certain tables is significant because row numbers are used as cross-references to other tables. If data is moved from one row to another, these relationships may be broken and system operation will be unpredictable.

You can use the Cut, Copy, and Paste commands to exchange information between Jupiter and other Windows programs such as Microsoft Word and Microsoft Excel. For example, suppose you want to create a Jupiter CP Input Set using Microsoft Word or another Windows text editor. The document might look similar to the following:

```
VTR  -0 -src-00-src-0
VTR  -1 -src-1 -src-1
VTR  -2 -src-2 -src-2
VTR  -3 -src-3 -src-3
VTR  -4 -src-4 -src-4
VTR  -5 -src-5 -src-5
VTR  -6 -src-6 -src-6
VTR  -7 -src-7 -src-7
VTR  -8 -src-8 -src-8
VTR  -9 -src-9 -src-9
```

The text must be Tab–delimited (as indicated in the text above by the dashes); spaces must not be used between columns. In the case of a Microsoft Excel or other Windows spreadsheet document, each field would be entered in a separate cell.

Follow these steps to copy and paste rows between the Windows clipboard and Jupiter:

1. Select the preferred text and make a note of how many rows you have selected.
2. Use the Copy command under the Edit menu (Edit> Copy).
3. Select the Jupiter CP Input Set window and then select the row number box above where you want to paste.
   - If you want to insert new rows, press the Insert key on the keyboard once for each row that was copied and to be pasted.
4. Use the Paste command under the Edit menu (Edit> Paste). The results of this act are shown in Figure 100.

Figure 100. Pasting the Tab-Delaminated Text

	Category	Entry	Auto Mnem	Mnemonic	Logical Input
1	VTR	0	☑	src-0	src-0
2	VTR	1	☑	src-1	src-1
3	VTR	2	☑	src-2	src-2
4	VTR	3	☑	src-3	src-3
5	VTR	4	☑	src-4	src-4
6	VTR	5	☑	src-5	src-5
7	VTR	6	☑	src-6	src-6
8	VTR	7	☑	src-7	src-7
9	VTR	8	☑	src-8	src-8
10	VTR	9	☑	src-9	src-9

8766-sc21-r0

Naming Rules

When creating a name for a Jupiter set, table, control panel, or other device, the following rules should be observed:

- Names should have eight character maximum.
- Names must be unique.
- The following characters are OK to use for names:
  - Letters A through Z
  - Numbers 0 through 9
  - Underscore: _
  - Number sign: #
  - Hyphen: –
  - Caret: ^
  - Dollar sign: $
  - Exclamation point: !
  - Percent sign: %
  - Ampersand: &
  - Braces: { }
  - At sign: @
  - Single quote mark: ‘
  - Apostrophe: ’
  - Right parenthesis:)

All other characters should not be used for names.

Configuration Set Management

The top of the Configurator menu (Figure 101) shows the name of the selected set. This is the system configuration directory that is currently selected for editing.

After a set is edited, it should be saved and then compiled. If the set is successfully compiled, the set name will appear on the Jupiter Network Suite Control Center "Application" menu; the set can then be selected for download, during which a copy is sent to the system hardware. Another copy always remains in the server, ready for automatic, on-demand download to the hardware.

The Jupiter can have any number of configuration sets, each of which contains the file and subset types shown in Figure 103 on page 135. (The files in quotation marks are example names.)

Any one of the configuration sets can be selected for use by the system. This allows the entire system to be re-configured from the file server with only a brief interruption to normal operations.

Modify and Download Configuration Set

Note Program the system in small steps and compile often!

As described earlier, a compiled and/or active configuration set cannot be edited directly. And, since creating a new configuration set from scratch is a very time–consuming process, you will probably want to make changes by making a copy of the un-compiled (source) version of the set, editing it, and then switching the new set on-line. While any number of file management schemes can be used to accomplish this, the following procedure is suggested:

1. Make a copy of the most recent, known–good source set. Name the copy "CONFIG01."
2. Edit "CONFIG01." Save the set.
3. Compile and Download "CONFIG01."
4. Select and copy source set CONFIG01. Name the copy "CONFIG02" when the next change is needed.
5. Edit "CONFIG02." Save. Compile and download.
6. Repeat above steps as needed.

Eventually you will want to start deleting the older sets.

By numbering the sets, there will never be any doubt about which is the latest version. Also, it will be easy to return to known good sets. This suggestion is detailed in the steps below.

Figure 101. Configuration Set Editing and Downloading.

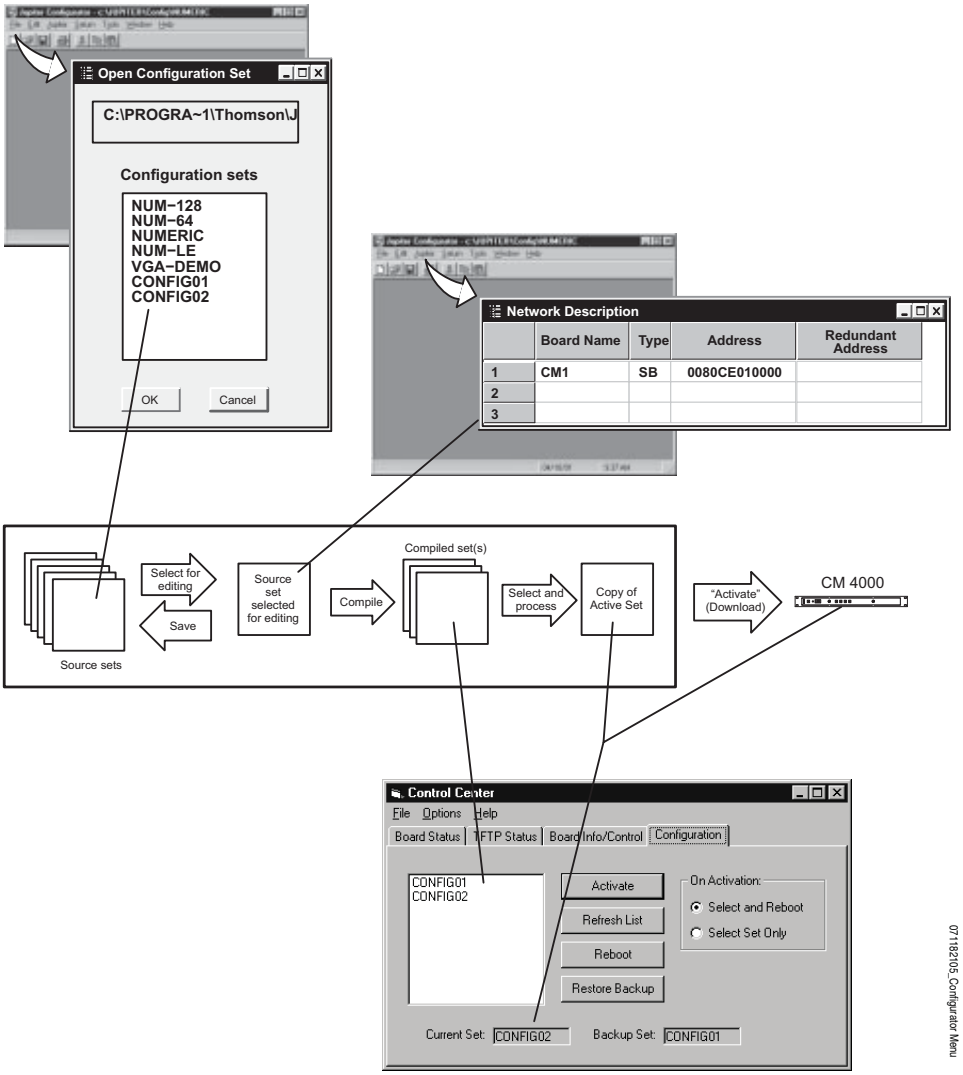

Copy Configuration Set

Make a copy of the latest known−good set as follows:

1. On the Jupiter Configuration File menu, click Open. This will open a menu similar to that shown in Figure 102 on page 133.

This menu will list all existing system configuration sets.

The NUMERIC sets are factory-supplied sets provided for quick start and diagnostic purposes. For more information, see *Use Numeric Sets for Quick Switcher Checkout* on page 134. The list may also contain a test set used at the factory.

Figure 102. Selecting Edit Set Menu

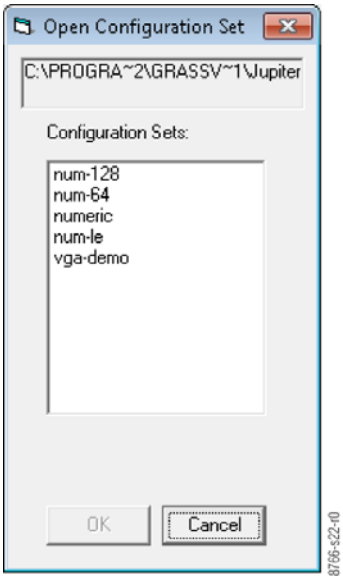

2. Select the desired set name and then click the **OK** button. The set will then load.
3. Select the Save As option under the File menu (File > Save As).
4. Enter a new name for the set (up to eight characters).

When creating a name for a Jupiter set, table, control panel, or other device, it's a good practice to use letters and numbers only. If you want to use punctuation or special characters, see *Naming Rules* on page 130 before creating a name.

5. Click the **OK** button. The copied set will then be the active set when the set has finished copying.

Edit Configuration Set

Editing procedures for specific modifications are described in this manual, starting with the *Network Description Table* on page 151. From the Network Description table, you should move on to the Serial Protocol table, then the Switcher Description table, and so on through the remaining Jupiter tables.

Note As previously explained, you cannot enter data on "secondary" tables first. For example, you must enter a new CM 4400 on the Network Description table. In general, data should be entered in the same order as the tables appear in the pull-down menu. For more information, see *Automatic Table Entry* on page 121.

Not all tables will apply to every system. For example, some are for machine control, others are for backward compatibility with Philips/BTS

Party Line equipment, etc. Please refer to the description of each table for more information.

Use Numeric Sets for Quick Switcher Checkout

The factory-supplied numeric configuration sets can be used to set up and operate the routing switcher in the minimum possible time. The "NUMERIC" set may be used with a switcher with up to 256 inputs, 256 outputs, and four levels; the "NUM-64" set provides for 64 inputs and outputs; and the "NUM-128" set provides for 128 inputs/outputs.

The numeric sets are complete and ready to download, except for entry of at least one CM-4400 Control Chassis address, entry of the actual switcher Physical Levels and Driver types, and one switcher control panel address.

1. Use the "File > Open" menu to select one of the Numeric sets
2. Make a copy of the Numeric set.
3. Select the Network Description table (Jupiter > Network Description table).
4. Change the address of the CM-4400 to match those in your system. The actual switcher Physical Levels and Driver types are entered on the Switcher Description table. The control panel address must be entered on the MPK Devices Description table.

The set can then be compiled and activated as described in *Validate, Compile, and Activate (Downloading) Configuration Set* on page 135.

Inputs and outputs are selected numerically, using the TEST key on a CP 3000 control panel to enter a leading zero for selections zero through 99. The VTR key is used to enter a "1," and so on.

Figure 103. Jupiter File and Subset Types

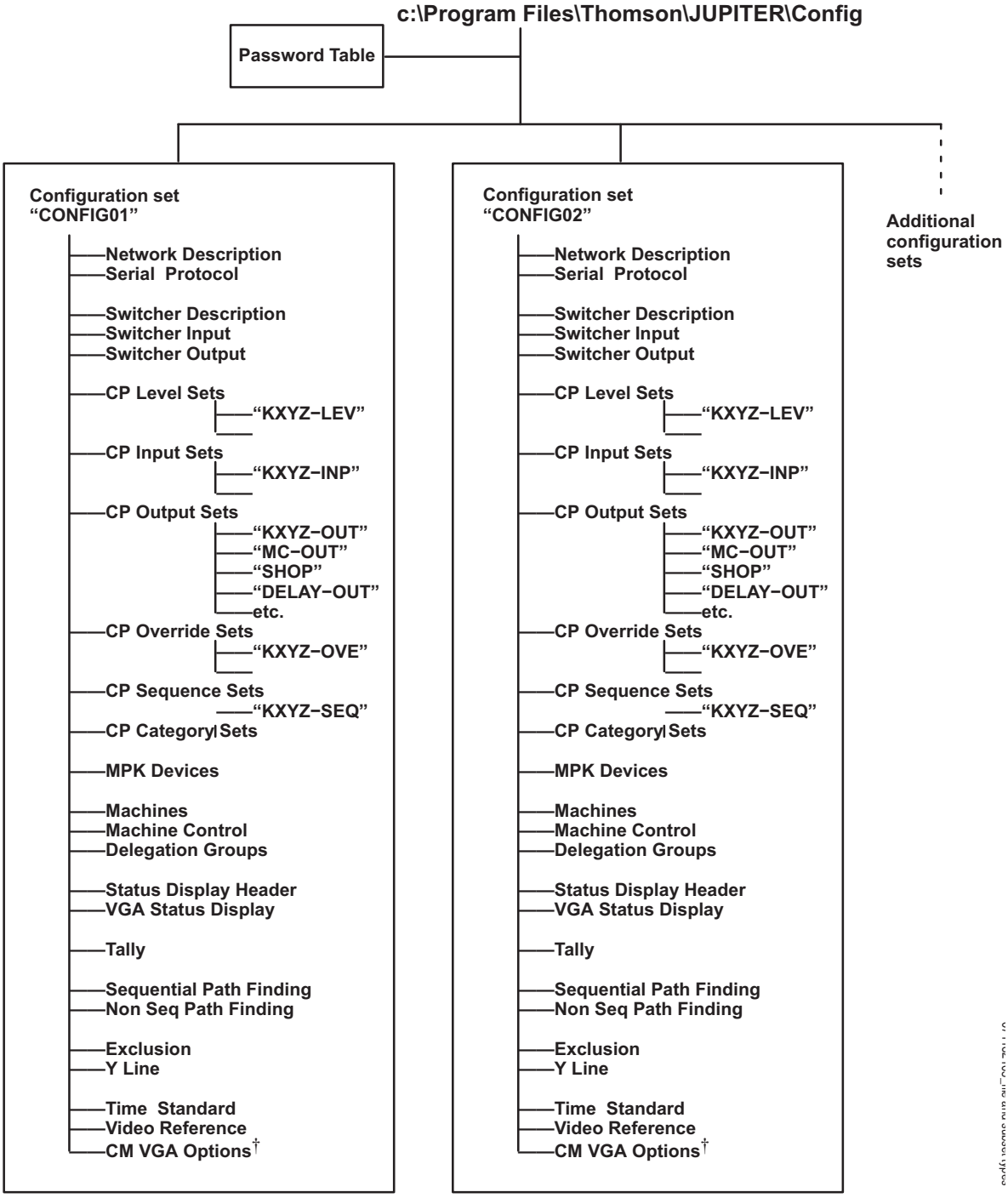

Validate, Compile, and Activate (Downloading) Configuration Set

Follow these steps to validate, compile, and activate a Configuration set:

1. Select the Validate All Tables option from the Tools menu (Tools > Validate All Tables) after you have finished editing.

If a validation error is reported, move the cursor to the red-colored area of the table to view the reason for the error. Correct the error and then run the Validate All Tables option again.

2. Select the Compile option from the Tools menu (Tools> Compile). When the compiler is finished, the number of compiler errors (if any) will be reported.

If a compiler error is reported, the error must be corrected and the set re-compiled. Click the Print command box to print the error messages.

A new set must compile without errors and be explicitly selected for downloading by the Control Center software before it can go online. Do not worry about an error corrupting the active set-even if the active set has the same name as the one you're working on.

3. Click the **Close** button.

4. Use the JNS Console to start the Jupiter Network Suite's (JNS) Control Center application (Figure 104). The Control Center application will then open.

   The Bootp Server program will also be started automatically in the background.

5. Select the new set in the text window.

6. Select the **Select and Reboot** radio button if it not already selected.

Figure 104. The Jupiter Control Center

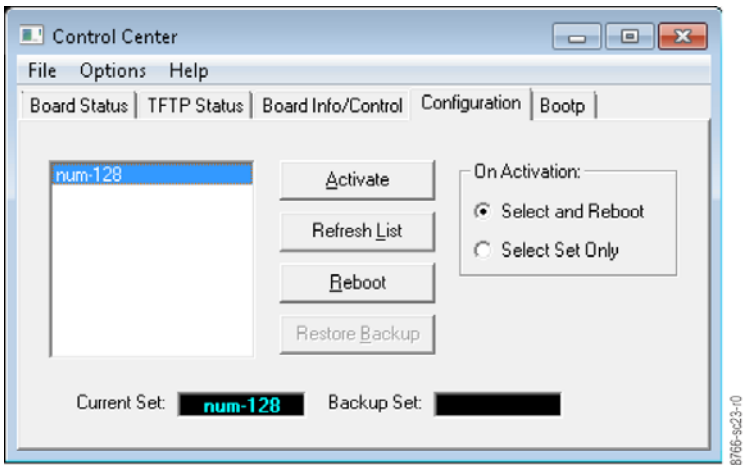

7. Click the **Activate** button to initiate the download.

CAUTION Once the activate/reboot command has been issued, do not interrupt the process until the reboot is complete. Interruptions such as sending a new command, turning off power, or disconnecting cables will have unpredictable consequences. With a CM-4400, such consequences can include corruption of data stored in flash memory and on the CM hard drive.

After a few seconds, the LEDs on the controller boards will turn red momentarily and the message “Device not connected” or “Startup” will appear on the system control panels. When the download is complete, the LEDs should be green and the panels returned to their previous status display. A complete set change can take several seconds or multiple minutes. The Download status can also be determined using the Control Center’s Board Status tab.

Figure 105. The Jupiter Control Center’s Board Status Tab

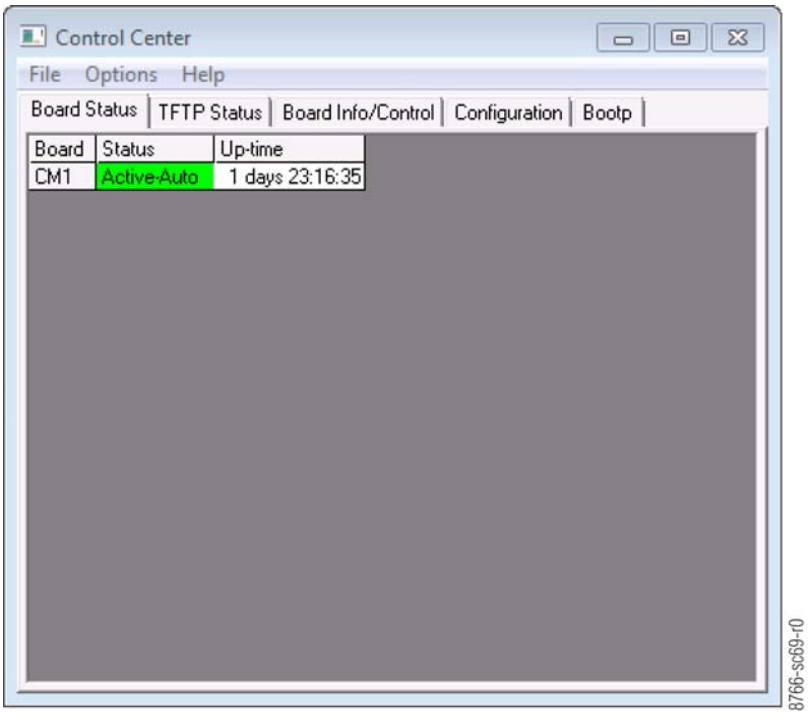

Note Special procedures are available for CM-4400 systems to minimize system downtime during set activation. See Download Now / Reboot Later below.

All control panels should now be operational. For operating instructions, see the appropriate user manual. (*JEP-100 Jupiter / Encore Control Panel v1.2.0 Installation and Operating Manual*, *Jupiter Control System L-S and LCD Series Control Panels Installation and Operating Manual*.)

Download Now/Reboot Later (Pending Reboot)

Please refer to Figure 106 on page 138.

In order to minimize system downtime due to changes in configuration and application code and to provide the operator the ability to coordinate the time that the system is unavailable, modifications were made to Windows and the CM-4400 embedded code resulting in a different config-

uration set and code activation procedure compared to previous Jupiter releases.

With the CM-4400, it is possible to download a configuration set and a copy of the application code without actually placing them in operation; during this "Pending Reboot" state the CM-4400 continues to operate without interruption using the previously executing application code and configuration. The new set and application code will only be placed in use after the CM-4400 has been rebooted.

Note A reboot will occur when the operator executes any operation from the Control Center that will cause a reboot or a "Pmem Clear" to be sent to the processor, or by manually rebooting, or clearing Pmem on the processor from the shell prompt, or by pressing the Reset button.

The purpose of the Pending Reboot procedure is to provide the operator better control of system downtime. The download process, which may be rather lengthy in large systems, does not interfere with normal operations. This allows the Reboot step, which is much shorter (but will interrupt switching operations), to be scheduled at an appropriate time.

Figure 106. Example of a "Pending Reboot"

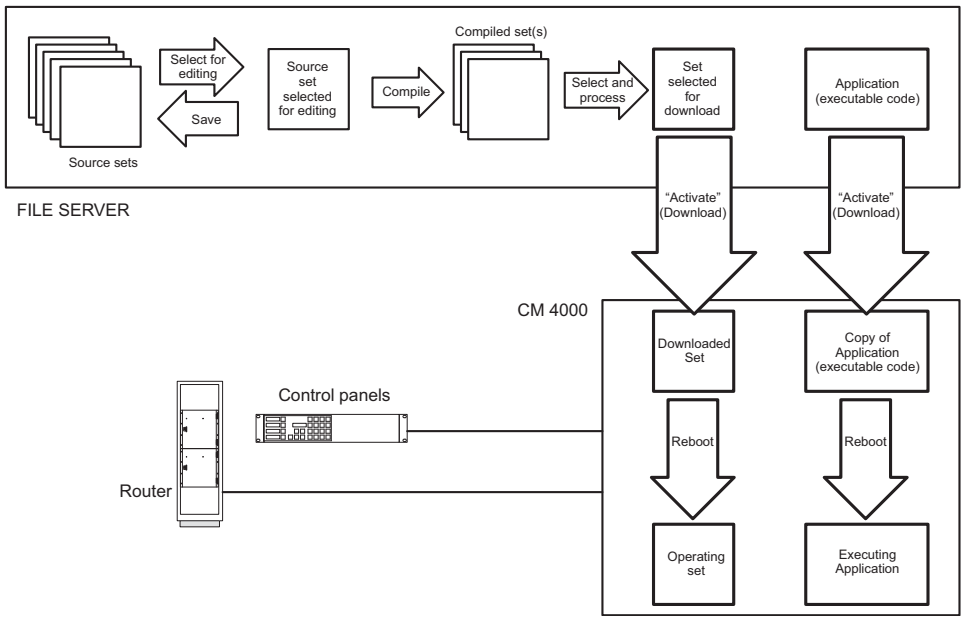

Follow these steps to apply the Download now / Reboot later procedure:

1. Open the Control Center and click the Configuration tab.
2. Select the **Select and Reboot** radio button in the On Activation area.
3. Select a Configuration set and then click the **Activate** button (Figure 107).

Figure 107. The Jupiter Control Center

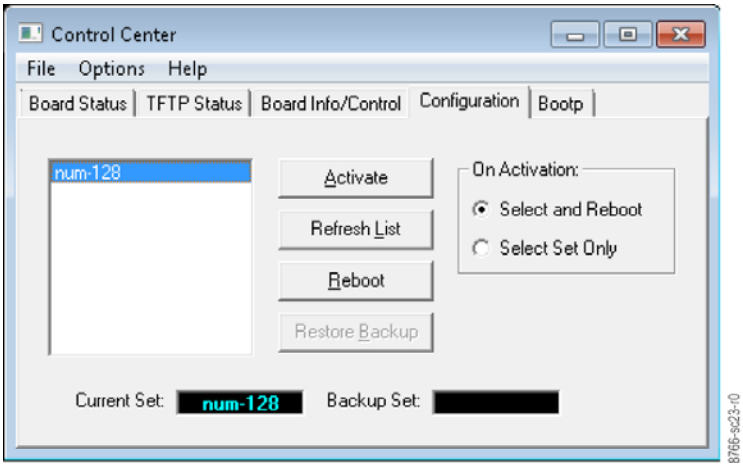

With the CM-4400, choosing the **Select and Reboot** radio button will not cause the CM-4400to reboot. Reboot of the processor should be accomplished through the use of the **Reboot** button on the Board Info/Control menu, as described below.

In order to download new application code, you must select a configuration set for Activation even if it has the same name as the set that is shown as Current. This action causes the system to recalculate the checksum of system files allowing the processor to determine the need to download/update files.

If the configuration set selected for activation and the Current set have identical content, the command to Activate (download) will be recognized to be un-needed. If application code has changed, the processor will download the set as a result of these actions.

When a Configuration set is activated, the CM-4400 will download the configuration and the application code as a background task.

Note This newly activated configuration and code is not placed in operation on the CM-4400 until a reboot of the processor is performed.

4. Click the **Board Info/Control** tab to monitor the status of the CM-4400 processors.

The system will compare the configuration set that was downloaded with the configuration set that is currently in operation. If they are different, the cell will be red and the phrase Pending Reboot will appear in the Configuration column. This Pending Reboot condition is shown in Figure 108.

Figure 108. The Jupiter Control Center- Configuration Pending Reboot

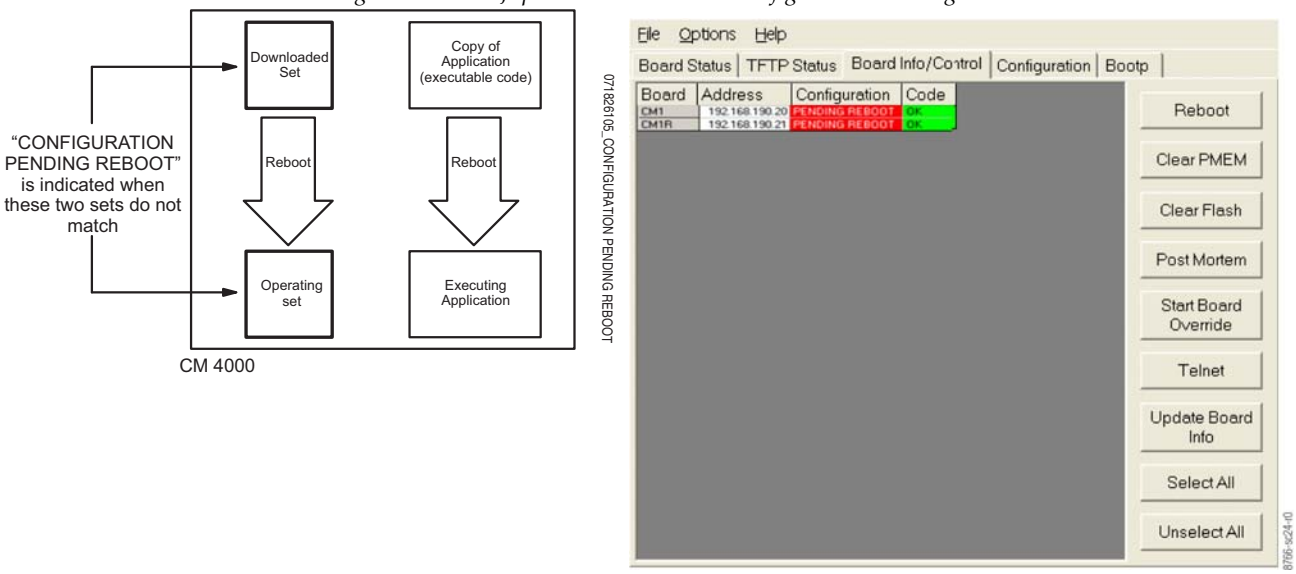

Likewise, the system will compare the application code that was downloaded with the application code that is currently in operation. If they are different, the cell will be red and the phrase Pending Reboot will appear in the Code column. This Pending Reboot condition for the application code is shown in Figure 109.

Figure 109. The Jupiter Control Center-Code Pending Reboot

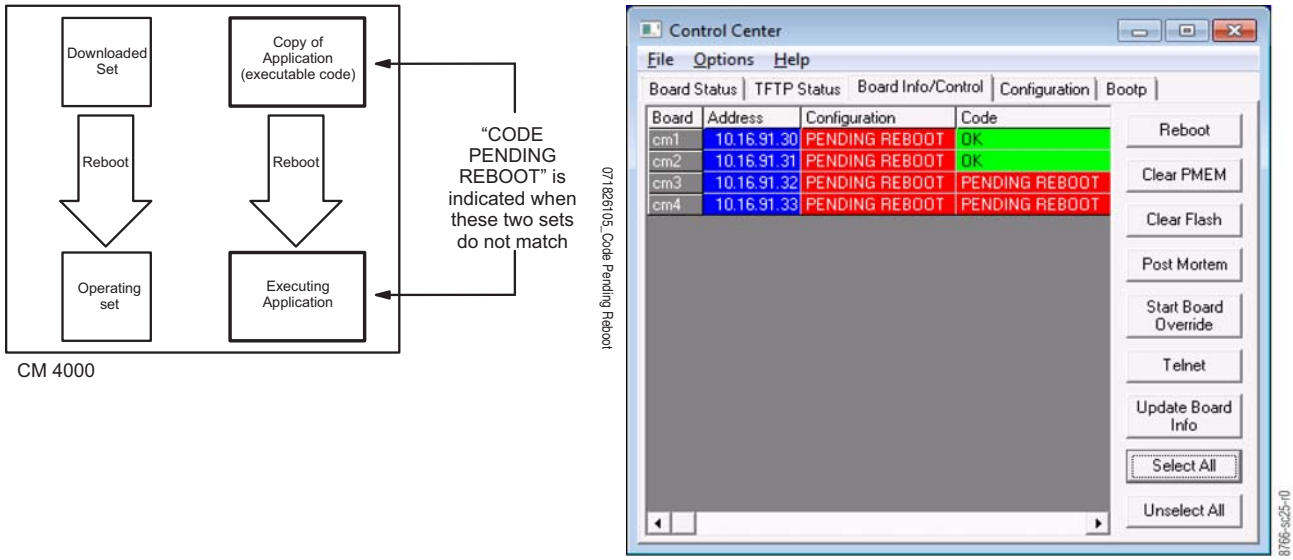

Due to the size of the application, the operator may observe the phrase Mismatch in the Code column while the download is in progress. The operator should wait until the phrase Pending Reboot appears in the Code column before continuing.

5. Once the Configuration or Code is successfully downloaded, which will be indicated by a green cell and the phrase Pending Reboot, you can, at a convenient time, select the processors either individually or by clicking the **Select All** button and then click the **Reboot** button to reboot the processor (The **Clear PMEM** button may be used to reboot the processor). The result is shown in Figure 110.

Figure 110. The Jupiter Control Center-Results of a Reboot

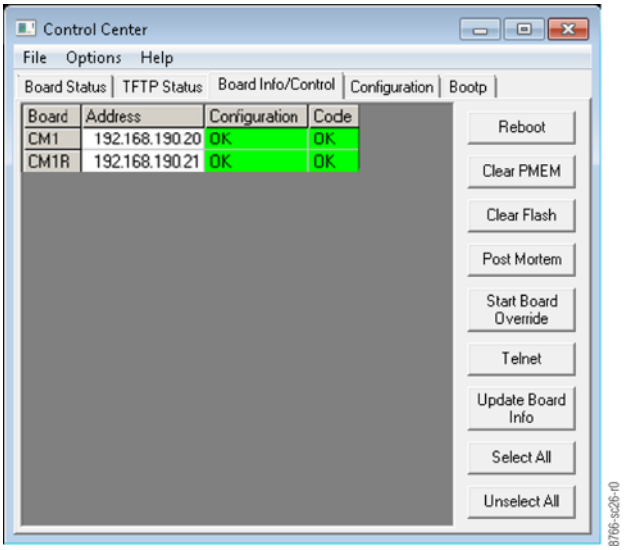

The phrase, "OK" means that the set/code that is running is the same as the set/code that is on the file server.

Note In systems with more than one controller board it is a good practice to complete the Pending Reboot process as soon as practical.

Mismatch Indicator

Please refer to Figure 108 and Figure 109.

The Mismatch indicator will show when the set/code in the file server is different than the set/code that is executing in a CM-4400. It is possible for the set/code is downloaded (or selected for download) to be different than the software that is actually in operation. For example, the Pending Reboot condition, where a set and application are downloaded for Reboot at a later time. The Mismatch indicator will also appear if there is a controller board changeover, a selective download, or a break in the network.

It is normal for the Mismatch indicator to appear while files are being downloaded from the file server to a controller board. The progress and state of the download can be observed by clicking on the TFTP Status tab in the Control Center.

Once the download is complete, the Mismatch indicator will change to Pending Reboot. If the Mismatch indicator appears (and remains on), and a file transfer is not in progress, it is suggested that steps be taken to reboot the controller.

Figure 111. The Jupiter Control Center-Mismatch Indicator

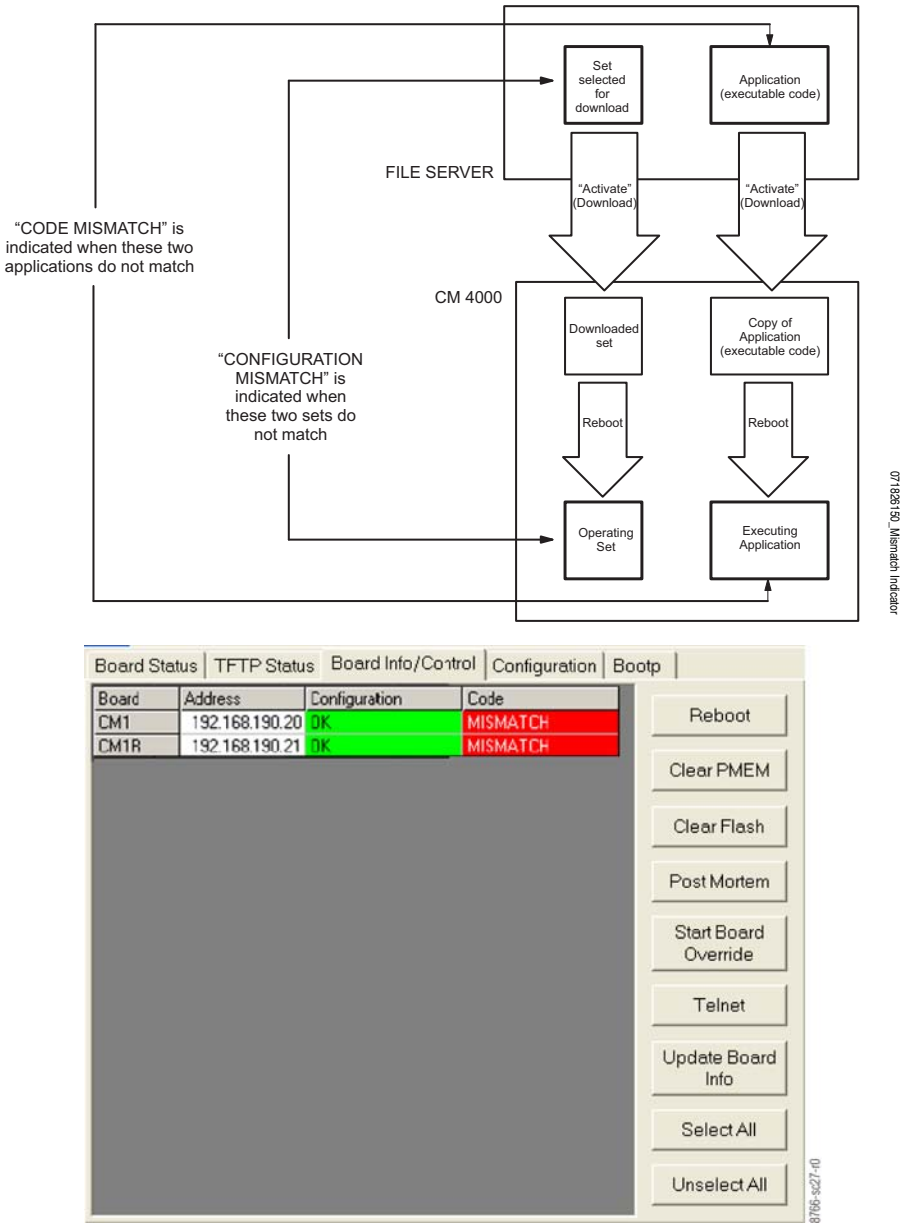

Troubleshooting

Error Conditions

- The text “00,” “01,” or “FF” will remain on the front panel LED display. The Red Alarm light on controller board remains ON. The meaning of the various possible LED on/off combinations is shown in *Troubleshooting* on page 257.
- The “Device not connected” message fails to appear or clear. There may be a download fault in the CM 4400 serial control section. It may be possible to correct this by resetting the board manually.
- A switcher control panel fails to indicate switcher status. There may be a download fault in the controller board. It may be possible to correct this by resetting the board manually.
- Other errors/conditions. The TFTP Status and Board Info/Control tabs in the Control Center window can be used to check the system.
- A Log Viewer is also available as a diagnostic tool. For more information, see *Logger and Log Viewer* on page 247.

Program Crash Recovery

If a control panel locks up, normal operation can usually be restored by cycling the power to the panel or to the controller board.

ZIP a Configuration Set

As part of a troubleshooting procedure, you may want to send a particular configuration set to Grass Valley’s Technical Support department for analysis. The “Zip” compression tool can be used to assemble all directories and files within a set so that it can be sent as a single compressed file. See *Export a Configuration Set* on page 113 for more information

ZIP Configuration Set with Diagnostic Information (Support Package)

To combine the active configuration set with the editor’s diagnostic information in a single zip file, select the Create Support Package option from the Tools menu (Tools > Create Support Package). This Support Package file can then be sent to Grass Valley’s Technical Support department to help them troubleshoot any difficulties you are having. The support package will include the version of the configuration set that is currently stored on your hard disk, any unsaved changes will not be included. If your configuration set is new and has never been saved, it cannot be included

Printing

Printer installation was discussed in *Printers* on page 69. If you want to print a single table, bring the table's window to the top of the desktop. Then select the "Print" command button on the bottom of the window.

Note Printing an entire set is not supported.

On-line Help

Two levels of Help are available for the Configurator:

- Toot-tips, whereby the name of a tool will appear when the cursor remains stationary over the icon for that tool
- Implicit Help, where a brief explanation of a field's purpose or requirements will appear along the bottom of the window when the field is selected.

In addition, an Adobe Acrobat version of the manual you are now reading can be accessed by selecting the Help pull-down menu. The Acrobat Reader application must be installed to view the manual.

Inadvertent Loss of Power

Following a power interruption, the Jupiter controller board(s) will reset itself and should be back in operation in a few seconds. The CM-4400 uses Compact Flash (CF) memory to maintain application files and data.

Disconnect File Server from LAN

The file server can be disconnected from the LAN without affecting control panel operation. However, a controller board will be unable to download files until the LAN is reconnected and the JNS program is running properly.

Passwords

Overview

Note You may wish to skip the Password table when you first configure the system. If password levels are needed they can be added later.

The Jupiter passwords are arranged in a hierarchy, with the 99-level password being the equivalent of a supervisor password. There must be at least one 99-level password in the system at all times. Entry of a 99-level password on the main menu will allow any system operation, including starting the Jupiter software and creating or changing passwords. In Figure 112, Boss Bill might have a password of "007007" with a level of "99."

In addition, a password level can be established for each control panel and each switcher output. Bill's control panel has an inherent password level of 80 and the switcher output leading to VTR1 has a level of 60. This means that anyone using Bill's control panel would be able to select a source for VTR1. Notice that the panel could also be used to select a source for QC but not for the Lobby monitor.

Figure 112. Jupiter Password System

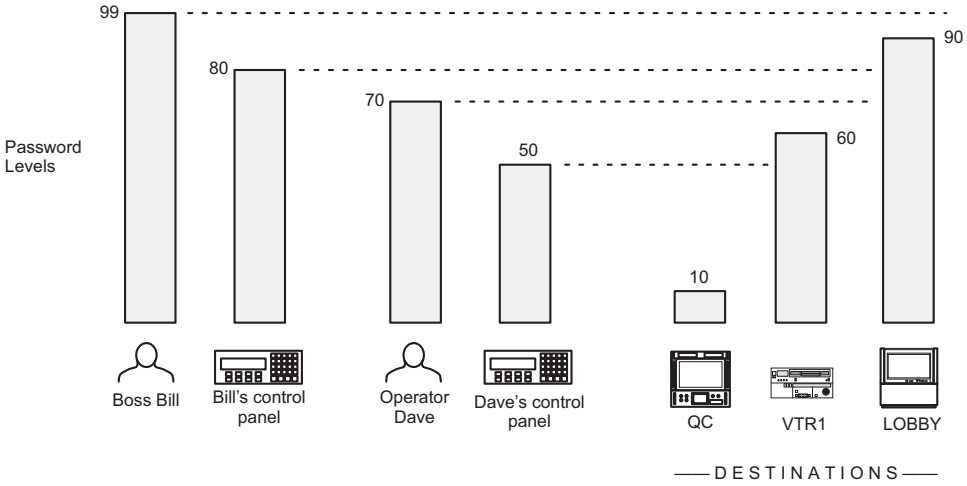

Note The LAN based L-S panels do not provide the ability to raise the password level.

However, Bill can enter his own personal password into his panel (or anyone else's) and temporarily raise the panel's level to the 99-level. A new source could then be switched to the Lobby (Figure 113).

Figure 113. Jupiter Password System

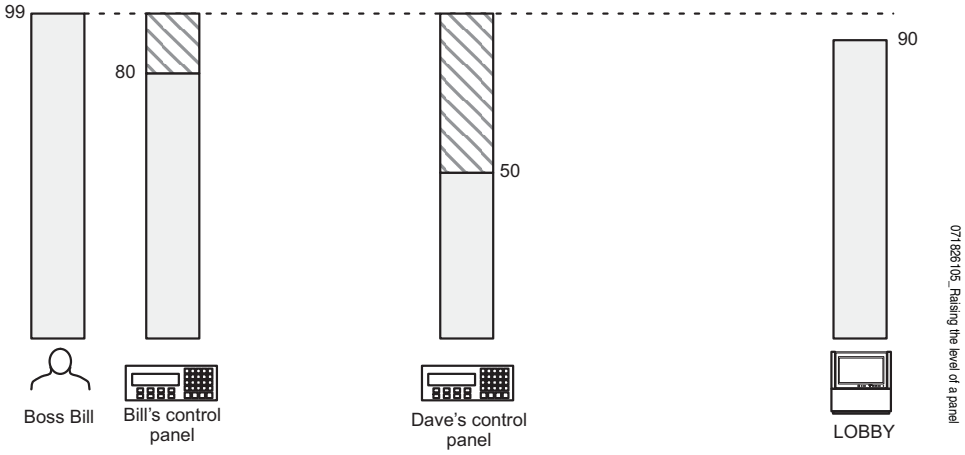

Furthermore, the level of a panel can be raised just long enough to make one switch (or until someone logs out of the panel).

When the level of a panel is raised only temporarily, then re-entry of a password will be required for special commands such as protect* and lock,* and for front-panel definition of overrides.* It may also be required for executing an Input Sequence.

For example, Operator Dave can protect the feed to VTR1. No other panel, regardless of password level, could then be used to change the source:

Figure 114. Protecting an Output

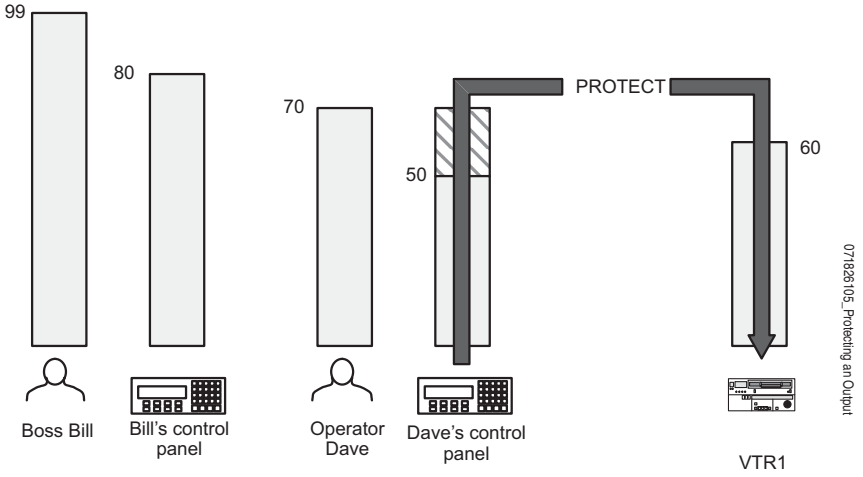

A more rigorous form of protection is lock, where the output must be deliberately unlocked before changing the source for a particular destination. Only the panel used to lock the output could unlock the output.

Figure 115. Locking an Output

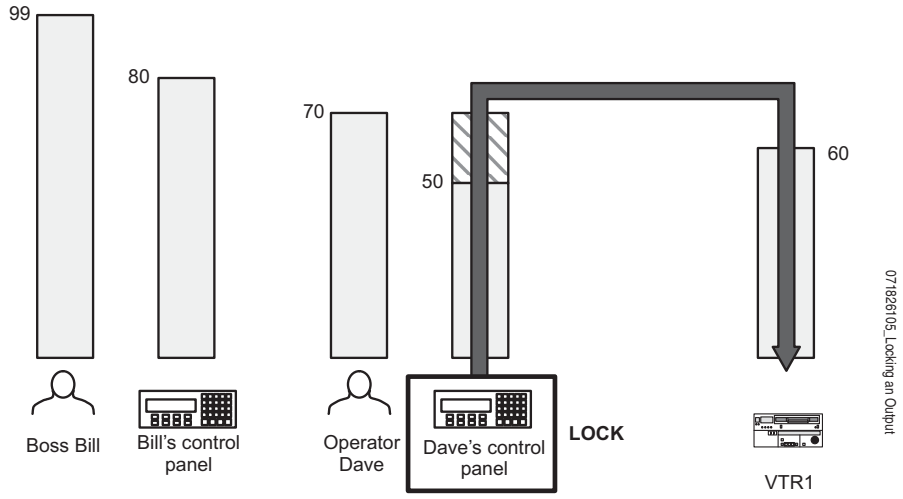

Systems are shipped with a password level of 00 for all panels and outputs; therefore any password can initially be used to access all control panel functions.

There is only one table for passwords and this table is used no matter what configuration set is active or selected for editing. However, the password levels for individual control panels and outputs are stored with individual configuration sets.

Change Password

Follow these steps to change a Password:

1. Select the Jupiter menu (or press the ALT+j keys) to bring up the Jupiter menu. This menu has the Configuration set table list. It doesn't matter which configuration set is selected for editing, since the password table applies to all sets.

Figure 116. Jupiter Configurator's Jupiter Menu

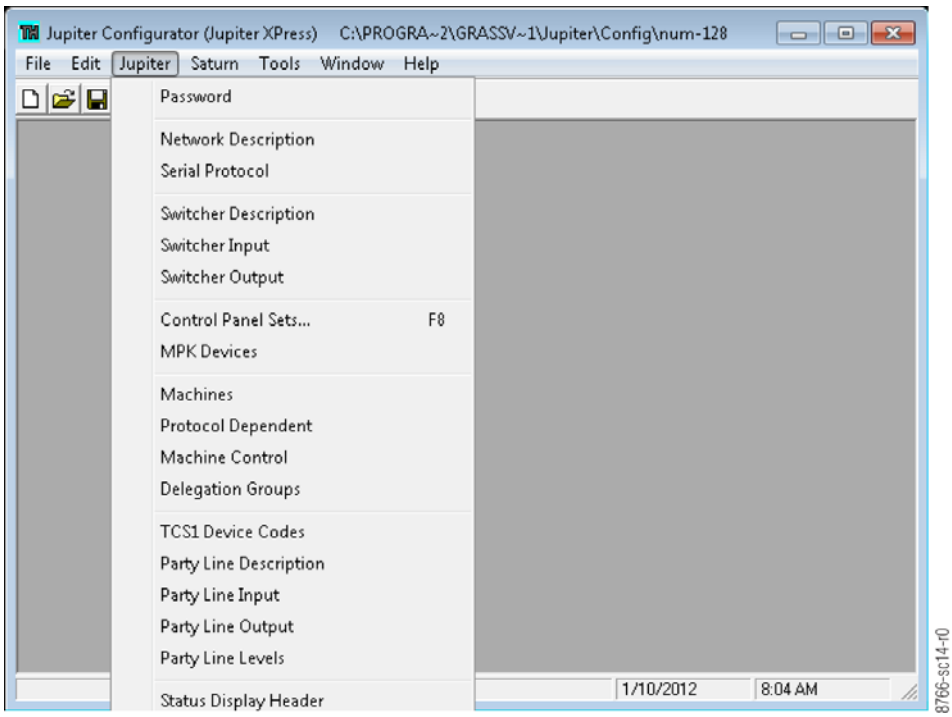

2. Select the Password option (or press the **p** key on the keyboard). This selection will display the password table:

Figure 117. Jupiter Configurator's Jupiter Menu

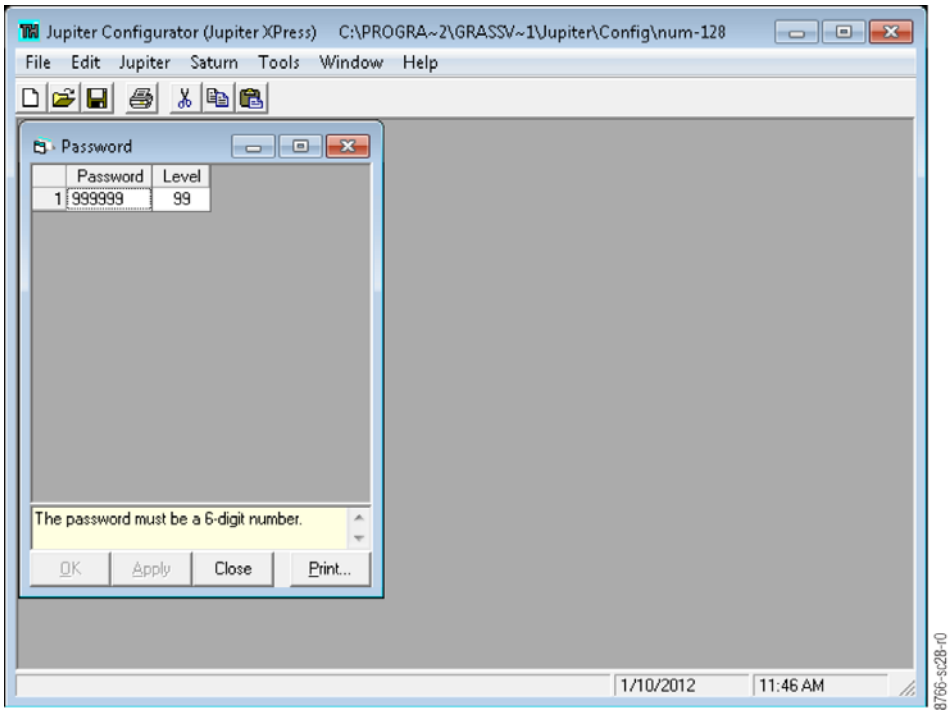

3. Select the password you want to change. Guidelines for using the editor are found in the *Enter/Edit Information in a Jupiter Table* section on page 121.
4. Type in the revised password. The password must consist of six numbers.
5. Use the **Tab** key (or click) to select the Level field. Type in the revised password level (if any). This must be a number from 00 to 99.

In this example, pressing Enter at this point will create a row for another password. (If left blank, the new row will be deleted automatically when the table is saved.)

6. Click the **OK** button when editing is complete. To save the changes, select File > Save.

Set Control Panel Password Levels

In addition to an individual Jupiter password that is assigned to each user, individual control panels can be given a password level. Setting a password level can provide varying levels of protection from one control panel to another.

Before you begin:

- In most cases, you will want to modify the set that is currently active; Grass Valley recommends that you copy the active set and then select the copy for editing. For more information, please see *Copy Configuration Set* on page 132.
- Check to see that the Configuration set you selected is the set that you want to change. The name of the Configuration set will be in the Title bar at the top of the Jupiter Configurator window.

Follow these steps to change the password level for a control panel:

1. Select the MPK Devices option from the Jupiter menu (Jupiter > MPK Devices). This selection will open the MPK Devices table. See *MPK Devices Table* on page 190 for more information.

   In Figure 152 on page 191, the Password level column is blank, meaning that all control panels have a password level of zero. A password level of zero means that all passwords presently assigned will enable any panel.
2. Click the Password field for the control panel you want to change.
3. Enter the preferred password level for this panel.

   Entering “50” would allow the panel to switch outputs that have a security level of 50 and less.
4. Save the changes to the table. After saving your changes, validate, compile and activate the Configuration set.

Set Switcher Output Password Levels

A password level can be given to individual switcher outputs. Setting an individual switcher outputs provide varying levels of protection from one switcher output to another.

Note Output passwords are not honored by automation protocol handling.

Before you begin:

- In most cases, you will want to modify the set that is currently active; Grass Valley recommends that you copy the active set and then select the copy for editing. For more information, please see *Copy Configuration Set* on page 132.
- Check to see that the Configuration set you selected is the set that you want to change. The name of the Configuration set will be in the Title bar at the top of the Jupiter Configurator window.

Follow these steps to change the password level for a switcher output:

1. Select the Switcher Output option from the Jupiter menu (Jupiter > Switcher output). This selection will open a list of all the existing Switcher Output tables (or open the table if only one table exists).
2. Click the name of the preferred Switcher Output table name from the list and then click the OK button. The Switcher Output table will then open. See *MPK Devices Table* on page 190 for more information.

   In Figure 152 on page 191, the Password level column is blank, meaning that all outputs have a password level of zero. All passwords presently assigned will allow changing the signal being sent to any output.
3. Double-click the password field for the output that you want to change.
4. Enter the preferred password level for this output.

   Entering a level of “50” would mean that only passwords having levels of 50 or more could be used to enable selection of an input for this output.
5. Click the **OK** button to close the table.
6. Save the table by selecting the Save option from the File menu (File > Save). After saving your changes, you must validate, compile, and activate the configuration set.

Force Unprotect/Unlock

Force unprotect/unlock is available as a file server utility.

Network Description Table

The Network Description table must be used when the CM-4400 is first installed on the LAN.

Figure 118. Example of the Network Description of the Jupiter Configurator

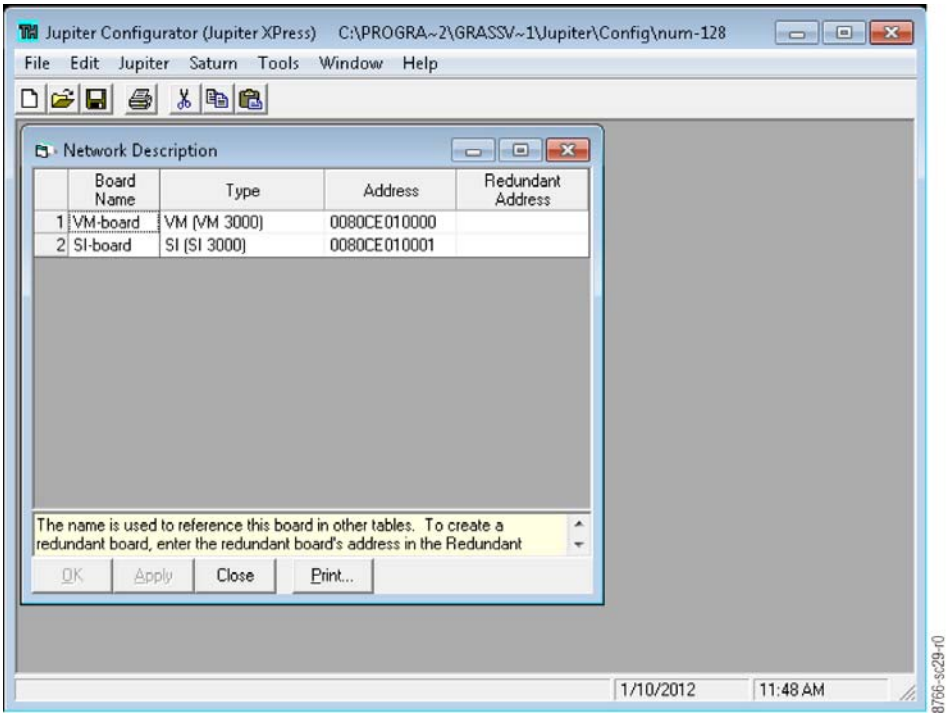

Each board is given a user-specified name; this name can be up to eight characters in length. The system is told which type it is, and the Ethernet address, in hexadecimal, as shown on the back of the controller chassis. If the board is redundant, the address of the second unit is entered.

Row numbers on Jupiter tables are used as the "logical" numbers for devices. Changing the row number of an existing device (by inserting/deleting a new controller board in the middle of the table, for example) will disrupt control of the system, requiring controller boards to be memory-cleared and reset (see *Clearing Persistent Memory (PMEM)* on page 107). One way to avoid this interruption is to add new devices at the end of tables.

Note Adding a redundant controller board to an existing table will also affect the system as described immediately above.

Automatic Table Entry Feature

Because entries on this table are needed for entries on other tables, the Configurator will automatically copy (or offer as a selectable item) the data

entered on this table to all secondary tables (including Saturn tables). For example, when a CM-4400 is entered, the name chosen will be added automatically to the Serial Protocol table. For more information about automatic table entry, see *Automatic Table Entry* on page 121.

Enter Controller Board Descriptions

Before you begin:

- In most cases, you will want to modify the set that is currently active; Grass Valley recommends that you copy the active set and then select the copy for editing. For more information, please see *Copy Configuration Set* on page 132.
- Check to see that the Configuration set you selected is the set that you want to change. The name of the Configuration set will be in the Title bar at the top of the Jupiter Configurator window.

Follow these steps to enter a description for a controller board:

1. Select the Network Description option from the Jupiter menu (Jupiter > Network Description). This will open a table that is similar to what is shown in Figure 118 on page 151.
2. Double-click the first Board Name field.
3. Enter the preferred name for the board. This name can be up to eight characters in length.
4. Press the Tab key on your keyboard to advance to the board Type box. A pop-up menu will list the possible board types. Select a type based on hardware and application:

Table 5. Type Field Options

Board	Application	Entry Type
CM-4400	AccuSwitch processor	AS
CM-4000	AccuSwitch processor	AS
CM-4000	Jupiter XPress processor	SB
Saturn AAP	Analog audio processor	AA
Saturn AVP	Analog video processor	AV
Saturn CP	Control panel	CP
Saturn DAP	Digital audio processor	DA
Saturn DVP	Digital video processor	DV
Saturn HDVP	High definition video	HD
PC	Software control panel suite	PC

5. Select the Address box and enter the Ethernet hardware address for the board.
   - For the CM-4400 and other system controllers, the address is shown on the back panel.
   - Use the Backspace key to erase.
6. Enter the address of the second unit if the board is redundant.
   - Even though they have the same name, the two boards will have different addresses on this table.
   - See *Installing Redundant CM-4400 Control Modules* on page 48.
7. Select Save from the File menu (File> Save) to save the table.
8. Click the **Ok** button to close the table.

Note To delete a board, click on the row number box and press DELETE.

Select the next table for editing. When finished, validate, compile, and activate the configuration set. (See *Validate, Compile, and Activate (Downloading) Configuration Set* on page 135 if you need more information.)

Note A CM-4400 needs to be removed from the system if that CM-4400 has been removed from the configuration set. If the CM-4400 is not removed, there is a possibility for IP address conflicts.

Serial Protocol Table

The Serial Protocol table must be used when a CM-4400 System Controller is first connected to control panels and other serial control devices. This includes remote (third party) switchers. This table is also used when a Saturn video processor serves as a connection point for an MPK bus, and/or when a PC acts as a Software Control Panel.

Note In previous releases of the Jupiter system, a Serial port had to be defined in the Serial Protocol table and a serial device needed to be defined on that port in the MPK Devices table. If a serial connection was not defined, the CM-4000 board would not start successfully. In the 7.8.1 version (and later) of Jupiter, Jupiter XPress and AccuSwitch boards will operate without a serial device defined.

The CM-4400 has eight serial ports; each can be set individually (Figure 119).

Figure 119. Example of the Serial Protocol Table

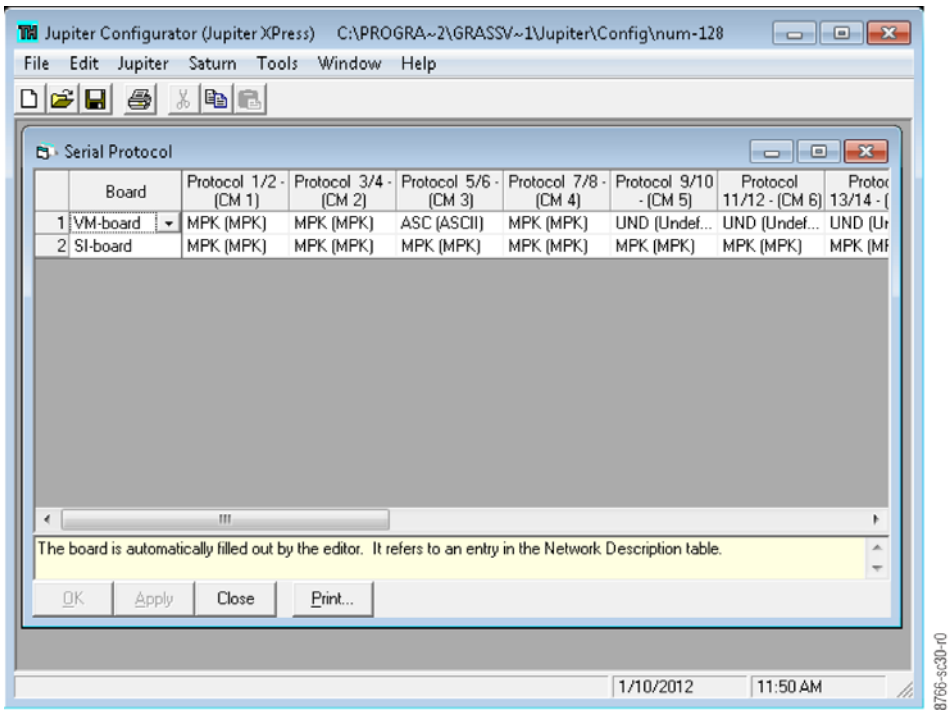

The columns on the right side of the table show the baud rate setting for each port (Figure 120).

Figure 120. The Baud Columns of the Serial Protocol Table

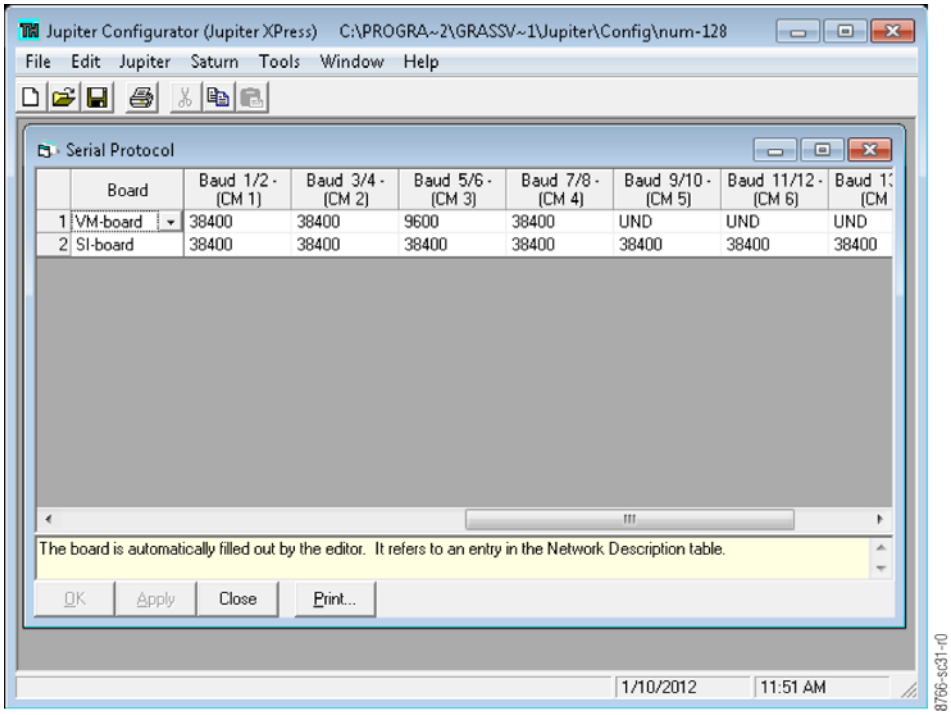

Enter Controller Board Protocol

In most cases, you will want to modify the set that is currently active; if so, you may want to copy the active set and select the copy for editing. For more information, please see *Copy Configuration Set* on page 132.

Note On the top of the Jupiter Configurator window on the title bar, you will see the name of the Configuration set. Check to see whether the configuration set that you want to change is selected.

Follow these steps to enter or modify the Serial Protocol table:

1. Select the Serial Protocol option from the Jupiter menu (Jupiter > Serial Protocol). This will open a table similar to that shown in Figure 120. The Board names should already be present (they were established using the *Network Description Table*).
2. Click the appropriate protocol box. A pull-down menu will list the possible protocol types. Click on the preferred type.
3. Continue the process for the baud rate fields. Baud rates will be selected automatically for some protocols.
4. Save your changes.
5. Compile and activate the Configuration set. (See *Validate, Compile, and Activate (Downloading) Configuration Set* on page 135 if you need more information.)

Serial Protocol Selection Options

The possible selections are as follows (NA = not available, Opt = optional, Std = default):

Table 6. Serial Protocol Selections

Device Type	Protocol	1200	2400	4800	9600	19200	38400	115000
AlpahImage	ALP	NA	NA	Opt	Opt	Opt	Std	NA
ASCII	ASC	Opt	Opt	Opt	Std	Opt	Opt	Note 1
CM Es-Tributary	CET	Opt	Opt	Opt	Opt	Opt	Std	NA
Datatek	DTK	NA	NA	NA	NA	NA	Std	NA
Es-Control	EXC	NA	NA	NA	NA	NA	Std	NA
ES-Control Panel	ESCP	Opt	Opt	Opt	Opt	Opt	Opt	Std
ES Switch	ESW	Opt	Opt	Opt	Opt	Opt	Std	
GVG Native Protocol	GNP	Opt	Opt	Opt	Opt	Opt	Opt	Opt
GVG Horizon	HRZ	NA	NA	NA	NA	NA	Std	NA
Nexus Star	NST	NA	NA	NA	NA	NA	Std	NA
NVision	NV	NA	NA	NA	NA	NA	Std	NA
Nexus	NZS	NA	NA	NA	NA	NA	Std	NA
Triton	TRI	NA	NA	NA	NA	Std	NA	NA

Table 6. Serial Protocol Selections

Device Type	Protocol	1200	2400	4800	9600	19200	38400	115000
Utah 1200 Baud	U12	Std	NA	NA	NA	NA	NA	NA
Utah 9600 Baud	U96	NA	NA	NA	Std	NA	Std	NA

Note Protocol for automation systems varies. Refer to additional protocol documentation supplied with the automation system.

Additional Protocol Notes

ASC (ASCII) refers to switcher control using Jupiter ASCII protocol commands originating from an external computer (For example, an automation system). When used with Diamond production switchers, the baud rate must match the hardware setting on the DD production switcher XBAR port (normally 38400). A technical description of the Jupiter ASCII computer interface protocol is presented in *Jupiter ASCII Communications Protocol* on page 273.

DTK (Datatek D-2000/2166), HRZ (GVG Horizon), NXS (Nexus), and U96 (9600 baud connection to Utah UDI-1) all refer to CM-4400 boards controlling one or more of these “remote” (third party) routers. When selected, this entry will apply to CM-4400odd-numbered ports only.

ESC (ESbus control) is for controlling a “remote” (third-party) routing switcher using the proposed ESbus routing switcher dialect.)

ESCP (ES-Control Panel) is for a JEP-100 Jupiter / Control Panel operating in Serial mode. For more information, refer to the JEP-100 manual, part no. 071 8376 xx.

ESW (ESswitch) is a simplified version of the ESbus Tributary protocol. This protocol allows a Grass Valley Crosspoint Bus router to be controlled by an Encore control system, automation system, or third-party computer.

GNP (Grass Valley Native Protocol) is used for Jupiter control of a Grass Valley SMS 7000 or Encore control system (which is in turn connected to a routing switcher).

TSL-UMD (TSL) is for Television Systems Ltd. under monitor displays. For more information, see Appendix S.

TRI (Triton) routing switcher protocol.

Saturn Video Processor – Entry for MPK Port

The Saturn Master Control Switcher video processor (either digital or analog) can be used as an alternate connection point for an MPK bus. (In

Saturn stand-alone systems, it would be the only MPK port available.) Follow these steps to enter the MPK port:

1. Select the MPK option from the drop-down list.
2. Verify that "38400" has been entered in to the Baud 1/2-(CM 1) column. All other ports can be left undefined.

   An example entry is shown in Figure Figure 121.

Figure 121. Example of the MPK Entry in the Serial Protocol Table

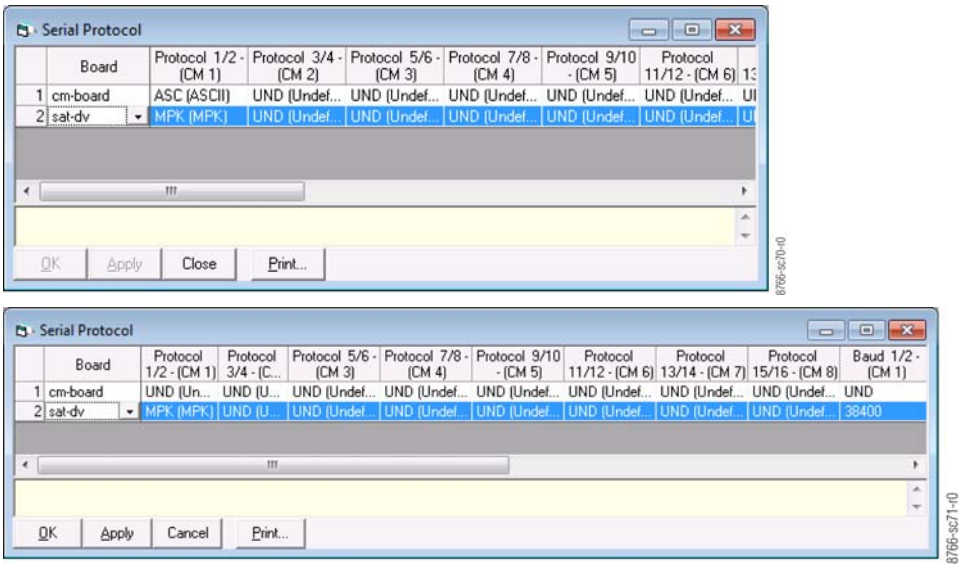

Connect L-S or LCD Series Control Panels

When L-S or LCD Panels are connected to a CM-4000 serial port (and operated in Serial mode), the CM-4000 serial port must be configured for "ESCP" protocol using the Serial Protocol table. The Baud rate should be set at 115K. Use the CPES-SER type for panels to use up to 98 categories.

Switcher Level Descriptions

The Switcher Description table must be used when the CM-4400 is first connected to a distribution switcher.

Note Some of the functions described in this section may be extra-cost options. Contact your Grass Valley Representative for more information.

Each logical level number of the switcher is given a user-specified name that can be up to eight characters in length, and the system is provided with detailed information about each level.

In previous releases of the Jupiter system, a router or Levels had to be defined in the Switcher Description table for each board.

In the 7.8.1 version and later releases of Jupiter, an AccuSwitch board will run without requiring a configured Level for the AccuSwitch board.

Figure 122. Example of the Switcher Description Table

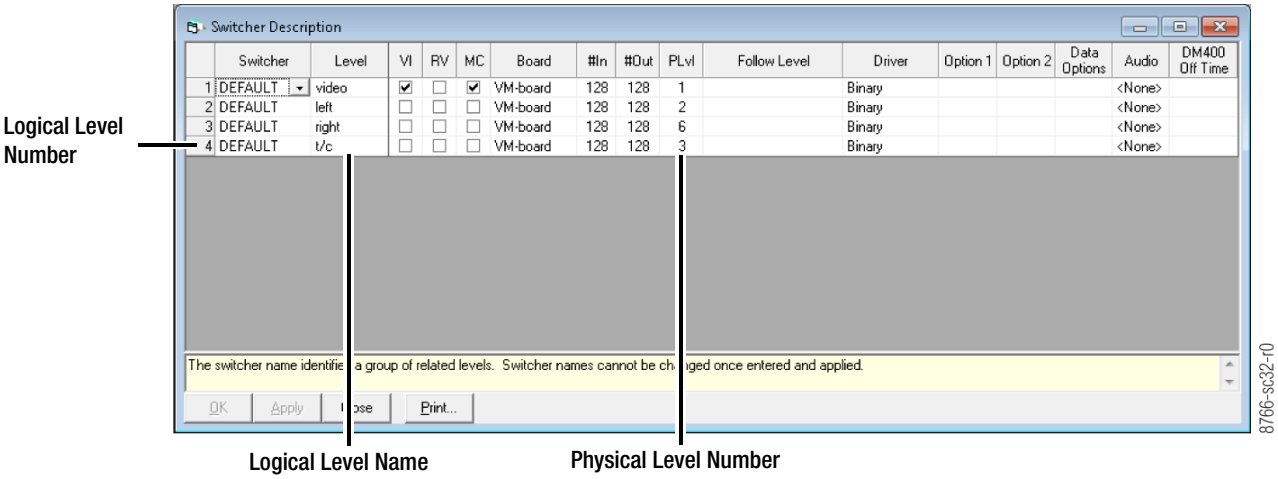

In most cases, you will want to modify the set that is currently active; if so, you may want to copy the active set and select the copy for editing. For more information, please see *Copy Configuration Set* on page 132.

Note On the top of the Jupiter Configurator window on the title bar, you will see the name of the Configuration set. Check to see whether the configuration set that you want to change is selected.

Follow these steps to enter the Switcher Level's descriptions:

1. Select the Switcher Description option of the Jupiter menu (Jupiter > Switcher Description). This will open a table similar to that shown in Figure 122.

2. Enter a name for both the Switcher and Level.

   Row numbers on Jupiter tables are used as the "logical" numbers for levels (Figure 122). Changing the row number of a level (by inserting/deleting a new level in the middle of the table, for example) will disrupt control of the system, requiring controller boards to be memory-cleared and reset.

   One way to avoid this interruption is to add new levels at the end of tables. Adding new levels in the middle of the table will also clear all entries in the Switcher Input and Output tables.

   Normally one switcher is named, using up to eight characters.

   The level name (also called "logical level name") can also be up to eight characters. All of the following information entered on this menu will

apply to this level. Conventional names are “VIDEO,” “LEFT,” “RED,” “GREEN” and so forth.

For a Venus “ES 401” digital audio switcher with two-level stereo mode hardware settings, there must be an entry for the Left level and another for the Right level; this will allow special stereo mode switching such as Mix and Reverse. If the ES 401 switcher’s hardware is set for one-level stereo mode, or for one-level mono mode, or if a Venus “ES 400” digital audio switcher is being configured, only one entry is needed. For information about setting the Venus hardware, refer to the Venus Installation manual.

Note In this manual, “ES 401 switcher” refers to the AES11 synchronous/asynchronous version of the digital audio switcher matrix board and its associated components; “ES 400 switcher” refers to the original asynchronous (non-reclocking) version of the digital audio switcher matrix board and associated components.

If there is more than one Grass Valley Crosspoint Bus router‡ type in the system (such as a Venus and a Trinix), there are two possible approaches to configuration. The additional switcher can be entered as a named level (or levels) within the main router. However, this will require a unique hardware setting on each level to avoid conflicts (see your account representative for A Triton-to-Jupiter Serial Control Kit, available from Grass Valley. This kit includes a B&B Electronics 422COR RS-232/RS-422 Converter, a B&B Universal Power Supply, a 25 ft. (7.6 m) VM/CM to Converter Cable, and a 5 ft. (7.6 m) Converter to Triton Cable. The part number of this kit is 44-050456-001.). Another solution would be to drive the Venus with one CM-4400 and the Trinix with another; this would allow level settings to remain independent.

3. Select the **VI** (Vertical Interval switching) check box for this level. Normally checked for the video level and unchecked for all others.

   If the CM-4000 is supplied with house reference sync, checking VI will cause switches on this level to start in the house vertical interval. In other words, the level selected on this menu will start switching first; other levels will follow as soon as possible. Priority is normally given to video since audio switches outside of vertical interval are not as noticeable.

   This method of enforcing vertical interval switching applies only to Grass Valley switchers operating on the Crosspoint Bus port of the CM. For “remote serial control” applications, including Triton, VI should be unchecked on all levels.

4. Leave the **RV** (Reverse switching) check box unchecked. This item applies only to certain data switchers. For video, audio, and time code switchers.
   - This box is checked for older model DM400B§ Data Matrix boards.
   - Newer model data switchers equipped with DM 400B§ Data Matrix boards use only one level, and the "RV" box is left unchecked (even though "reverse" switching is still taking place).
5. Select the **MC** (machine control) check box assignment follow Yes or No for this level. Normally checked for video level and unchecked for all others. One (only) level can be checked.

   As explained in detail elsewhere in this manual, the usual procedure is for the machine assignment system to follow the distribution switcher; that is, if a certain VTR is selected for a certain destination, then the associated machine control panel will automatically assume control of that VTR. This menu item determines which level will be used as the reference in making the machine assignment.
6. Select the Board name from the drop-down list for the CM-4000 controlling this level.

   The source of these names is the Network Description table.

   Each logical level can be controlled by a separate CM-4000. Redundant CM boards, if any, are ignored on this table. The redundant CM boards will have the same logical name.

   Using a single CM, one or more Grass Valley Crosspoint Bus routers can be connected to the Crosspoint Bus port. Triton routers, or certain non-Crosspoint Bus routers, can be connected to a CM-4000 serial port.
7. Enter the number of inputs and outputs in the #In and #Out column for this logical level.
8. Enter the physical (hardware) level number in the PLvL column field.

   This is the level address determined by hardware switches on the switcher itself. These are normally set at the factory and rarely changed in the field. Refer to the following list and the hardware manual supplied with the switcher for more information.

   A physical level number can range from 1 to 999; however, the maximum number of logical levels is still 96. This number may be reduced according to the number of outputs being controlled.

Note Whenever a routing switcher is configured for Ultra crosspoint bus, the physical level number in this column needs to be offset by 128. In other words, physical level Ultra 2 should be entered in this column as 130. Ultra crosspoint bus is used for audio routers 512 x 512 or larger and video routers of 1024 x 1024 and larger

a. Trinix digital video routers are usually factory set to operate as physical level 7.

b. Apex digital audio routers are usually factory set to operate in "two-level stereo" mode, which permits special stereo mode switching such as mix and reverse. The left level is normally set on the rear panel as level 32. The Right stereo channel is automatically given the same number plus 4. This setting requires configuration of two physical levels, typically Level 32 and Level 36. For more information about these hardware settings, refer to the Apex manual.

c. Venus switcher's backplane level select jumpers are usually factory set as follows:

Table 7. Venus Switcher's Backplane Level Select Jumpers

Name of Level	Physical level #	Notes
Analog video	1	
Serial digital video (standard definition)	7	
Serial digital video (high definition)	9	
Analog audio left (A1)	2	
Analog audio right (A2)	6	
Analog audio A3	8	
Analog audio A4	12	
AES digital audio	32	
AES digital audio (right)	36	Applies to all versions and modes of digital audio switchers
Time code (mono)	3	Applies only to right channel of ES 401 digital audio switchers operated in Two•level Stereo mode.
Data transmit	16	
Data receive	16	
Data (reserved)	20	

d. Concerto switchers are configured much the same as Venus. For more information, refer to Grass Valley Field Engineering Bulletin 075–0722–00, "Jupiter Crosspoint Bus Control of Concerto Flexframe Routing Matrix."

e. Triton switchers, when controlled by Jupiter, use a level scheme different than that described in the Triton manual. In Jupiter applications, split switching requires each level to be assigned a different number.

9. Enter the name of switcher and the logical level that this level is to follow permanently in the Follow Level's field. For video/audio switchers these boxes are usually left blank, thus allowing for split (breakaway) switching.

For switchers where split switching is not desirable (such as RGB switchers), this entry can be used to force one level to follow another; for example, "Red" could be entered in the Follow Name box on the menus for the Green and Blue levels. (This entry is not needed for Triton RGB/YUV applications.)

Jupiter does not support follow level switching when switch requests are issued from the JNS Physical Control application.

10. Select the preferred distribution switcher protocol ("Driver") from the Driver drop-down list. Use the following table as a guide:

Table 8. Switcher Protocol Selections

Switcher	Driver
Apex	Binary
Concerto (Controlled via Crosspoint Bus)	Binary
Concerto Data (Controlled via Crosspoint Bus)	DM400B
Grass Valley Series 7000 (Controlled via SMS 7000)	GVG Native Protocol
Grass Valley Encore•controlled router	GVG Native Protocol
Mars	Binary
SDR 400	Binary
Trinix	Binary
Triton	Trinton
Binary Confirm All (test)	Bin Confirm all
Venus	Binary
Venus Data DM 400/400A	Binary
Venus Data DM 400B	DM400B
Datatek D•2166/2000	Datatek
ESbus switcher	ES Bus
Nexus	NXS
Utah Scientific Party Line (UDI•1B)	Utah_96

11. Select the audio level from the drop-down list in the Audio column, for Venus and Apex switchers, select “Left” for the left audio level, “Right” for the right. Select the “Normal” option for other switchers.
    - For Triton switchers, select an “A” for each audio chassis. Triton data switchers with rear–panel DIP switch 7 DOWN (“controlled as audio”) also require an “A” entry. For Triton video switchers, or for Triton data routers with switch 7 UP (“controlled as video”), leave the column blank.
12. Save your changes, validate, compile, and activate the configuration set.

Switcher Input Table

The Switcher Input table must be used to assign a logical name to each physical input. One table must be defined for each switcher if there is more than one switcher in the system.

Logical names for various inputs are “BARS,” “TONE,” and “VT01.” Each name, which can be up to eight characters long, corresponds to a switcher’s physical input number for each level of the switcher. This number is normally attached at the factory to each connector on the back of the switcher; however, it should be understood that the real source of this number is the hardware device address, which is usually set with an internal DIP switch or jumper. (For more information, refer to the manual supplied with the particular switcher.)

An input name is not entered directly at switcher control panels; rather, it is linked to a category and entry number through the CP Input Sets table. The category and entry number are then entered at the control panel to make the switch. The status mnemonic that appears on control panels is also determined by the CP Input Sets table.

Note Mars physical input numbers, when controlled by a Jupiter system, are not continuous. For example, physical input numbers 8 through 15 are skipped. For more information, refer to the Mars manual in the Crosspoint/ Jupiter control section.

Some switchers (such as Apex, late–model Trinix, Concerto and Triton) use “1” as the first connector number. In this case, the physical input number for this connector, as entered on the table, is “0.” Connector “2” is physical input number “1,” etc.

If there is no entry for a particular level, no switch will occur on that level. On this table, when input “TC” is requested from a control panel, only the time code level will switch.

An automatic split (breakaway) can also be arranged. In this example, a request for the input named “TONE” will obtain input 064 on the video

level but input 000 on the other levels. Split switching is described in more detail below.

Figure 123. Example of the Switcher Input Table

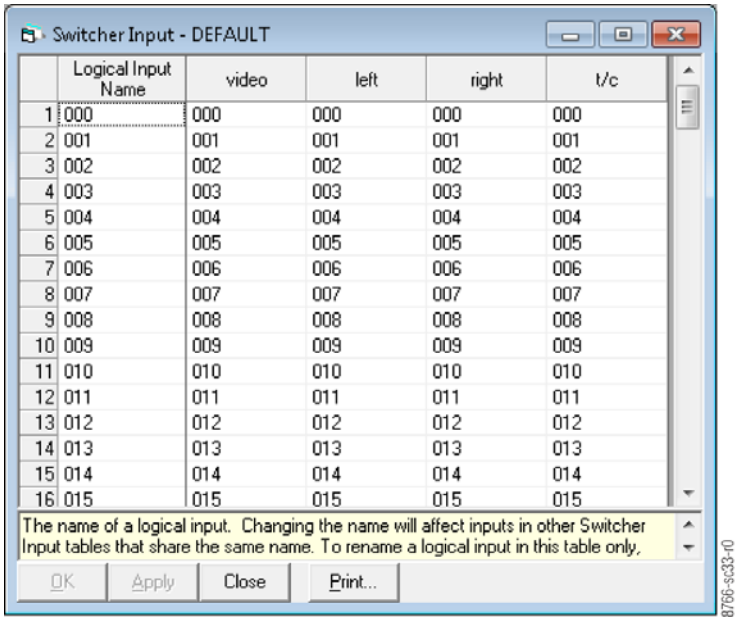

	Logical Input Name	video	left	right	t/c
1	000	000	000	000	000
2	001	001	001	001	001
3	002	002	002	002	002
4	003	003	003	003	003
5	004	004	004	004	004
6	005	005	005	005	005
7	006	006	006	006	006
8	007	007	007	007	007
9	008	008	008	008	008
10	009	009	009	009	009
11	010	010	010	010	010
12	011	011	011	011	011
13	012	012	012	012	012
14	013	013	013	013	013
15	014	014	014	014	014
16	015	015	015	015	015

Split Switching

Split (or breakaway) switching is the selection of one input on one level and another input on another level. An example would be the selection of color bars on the video level and test tone on the audio levels. Split switches can be manual, where the operator addresses individual levels and makes each switch separately; or, automatic, where a single category / entry number will cause the split to occur.

An automatic split can be arranged in one of two ways:

1. The switcher can be wired so that the split sources arrive on parallel inputs, as shown in Figure 124. On the video level, color bars are wired in as input 0. However, on the audio levels, test tone is wired in as input 0 and a time code generator is wired in as input 0 on the time code level. The Switcher Inputs table (Figure 123) is then arranged so that the input named “BARS” will switch to input 0 on all levels. This technique might be referred to as a “hard–wired split.”

Figure 124. Inputs to four–level switcher, showing a "hard–wired split"

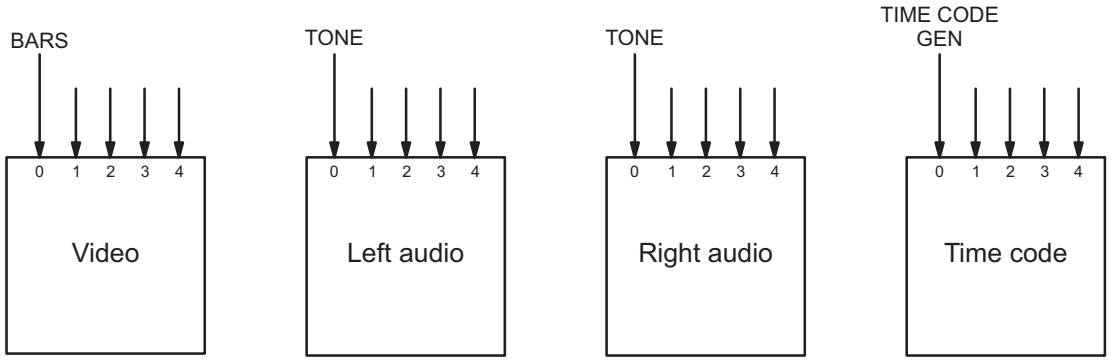

2. A more flexible approach is to modify the Switcher Input table so that a single input name will address different physical inputs from one level to another. For example, the switcher could be wired as shown in Figure 125, where black burst is input 64 on the video level, test tone is input 0 on the audio levels, and a time code generator is input 0 on the time code level. The Switcher Input table is arranged so that the input named "TONE" will switch to those inputs.

Figure 125. Software–controlled split

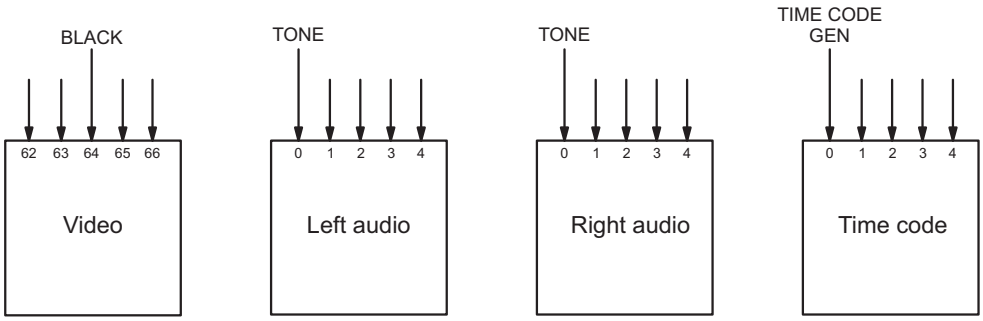

The Status for split switches is determined by the Indirect (I) and Primary (P) suffixes on the Switcher Inputs table.

Enter/Edit Input Names and Numbers

In most cases, you will want to modify the set that is currently active; if so, you may want to copy the active set and select the copy for editing.

Note On the top of the Jupiter Configurator window on the title bar, you will see the name of the Configuration set. Check to see whether the configuration set that you want to change is selected.

Follow these steps to enter the Switcher Input's descriptions:

1. Select the Switcher Input from the Jupiter menu (Jupiter> Switcher Input). This will open a list of all existing Switcher Input tables (or open the table if there is only one).
2. Click on the preferred switcher input table name and "OK." This will bring up a table similar to that shown in Figure 123 on page 164.

   If the table is based on the factory–supplied Numeric set, the table illustrates the reason for the name "numeric"- the Name column shows all the inputs with numbers instead of names.
3. Enter/edit the preferred logical name and physical input numbers for the inputs.
4. Add new inputs at the end of the tables.

   Row numbers on Jupiter tables are used as the logical numbers for sources. Changing the row number of an existing source (by inserting/deleting a new input in the middle of the table, for example) will disrupt control of the system. The memory on the controller boards will need to be cleared and reset (see *Clearing Persistent Memory (PMEM)* on page 107). Adding new inputs at the end of tables will help to avoid this interruption.
5. Save your changes, validate, compile, and activate the configuration set.

Data Switching Applications

In Venus DM 400B data switching applications, the switcher input table is used to assign a logical name to each physical port connected to a "tributary" device. See Figure 126 for an example and the Switcher Input table settings.

Figure 126. Example of DM 400B System.

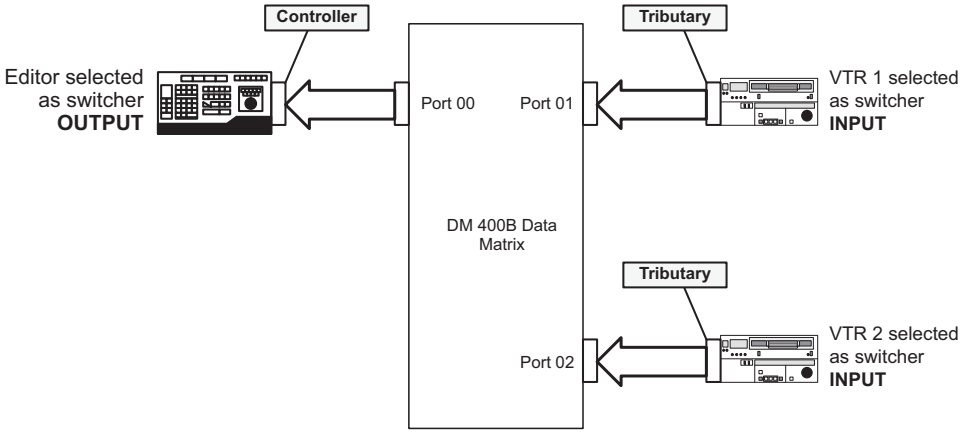

Switcher Input – MAINROUT						
	Logical Input Name	VIDEO	LEFT	RIGHT	TC	DATA
1	SAFE					064
2	EDIT1	000	000	000	000	000
3	VT01	001	001	001	001	001
4	VT02	002	002	002	002	002

Similarly, the switcher output table is used to assign a logical name to each physical port connected to a "controller" device.

Note All port numbers that reside in the Switcher Output table must also have an entry in the Switcher Input table (This is done to avoid possible Status display problems and is checked by the PC compiler).

Figure 127. Output Switcher Table for DM400B

Switcher Output – MAINROUT									
	Logical Output Name	Security	S–T		Pass word	VIDEO	LEFT	RIGHT	TC	DATA
1	EDIT1		–	▼		000	000	000	000	000

Controller/Tributary Reassignment

Some VTRs can themselves act as controllers or tributaries. With the DM 400B the associated ports can be configured as both inputs and outputs; this allows their pinouts to adjust automatically depending on which VTR is selected as the output (controller) and which is selected as the input (tributary). In Figure 128, VTR 1 is the controlling device; accordingly it is selected as a switcher output in order to configure the switcher port correctly. The tributary VTR 2 is selected as a switcher input.

Figure 128. Controller-Tributary Reassignment

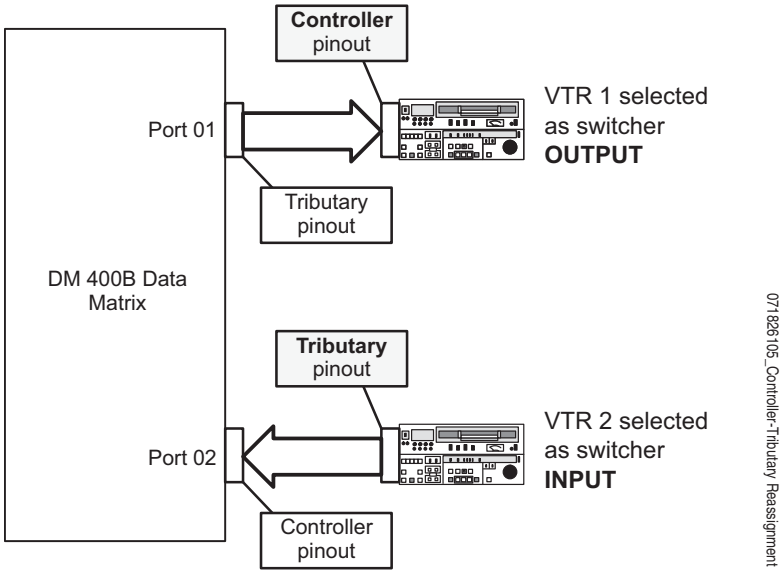

In Figure 129, the roles are reversed. VTR 2 is the master and VTR 1 is the slave. The switcher ports are configured properly by selecting VTR 2 as an output and VTR 1 as an input.

Figure 129. Controller-Tributary Reassignment- Reversed

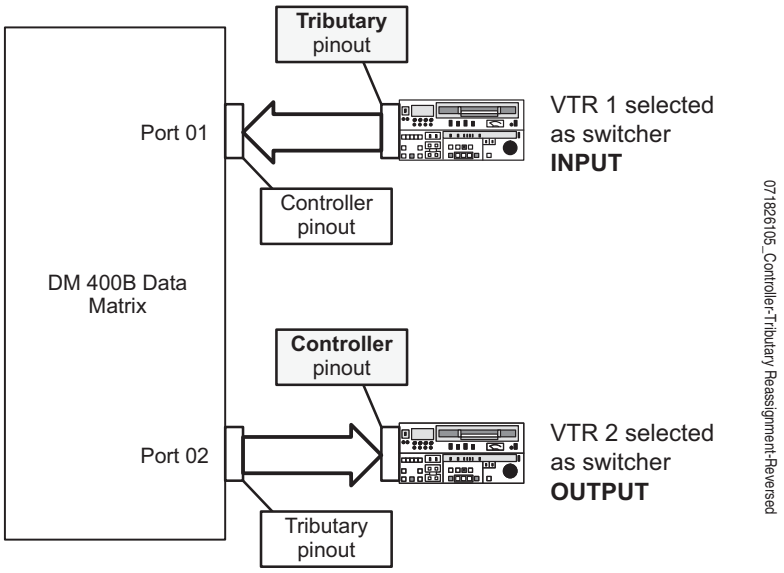

Examples of Switcher Input and Switcher Output tables for this reassignment application are shown in Figure 130.

Figure 130. Switcher Input and Output Tables for Controller / Tributary Reassignment

Switcher Input – MAINROUT						
	Logical Input Name	VIDEO	LEFT	RIGHT	TC	DATA
1	SAFE					064
2	VT01	001	001	001	001	001
3	VT02	002	002	002	002	002

Switcher Output – MAINROUT										
	Logical Output Name	Security	S–T		Pass Word	VIDEO	LEFT	RIGHT	TC	DATA
1	VT01		–	▼		001	001	001	001	001
2	VT02		–	▼		002	002	002	002	002

07182610_Switcher Input and Output Tables

CP Input/Output Sets and Control Panel Operation

The input and output names in the previous tables must be assigned to Category/Entry selections using a CP Input Set and CP Output Set. For example, if a CP–3000–type panel is to be used, the "C" (for "controller") category button could be used to select the controller (output) and the VCR category button could be used to select the VCRs.

Switcher Output Table

The Switcher Output table (Figure 131) performs similar functions as the *Switcher Input Table* except that it applies to outputs.

Figure 131. Example of the Switcher Output Table

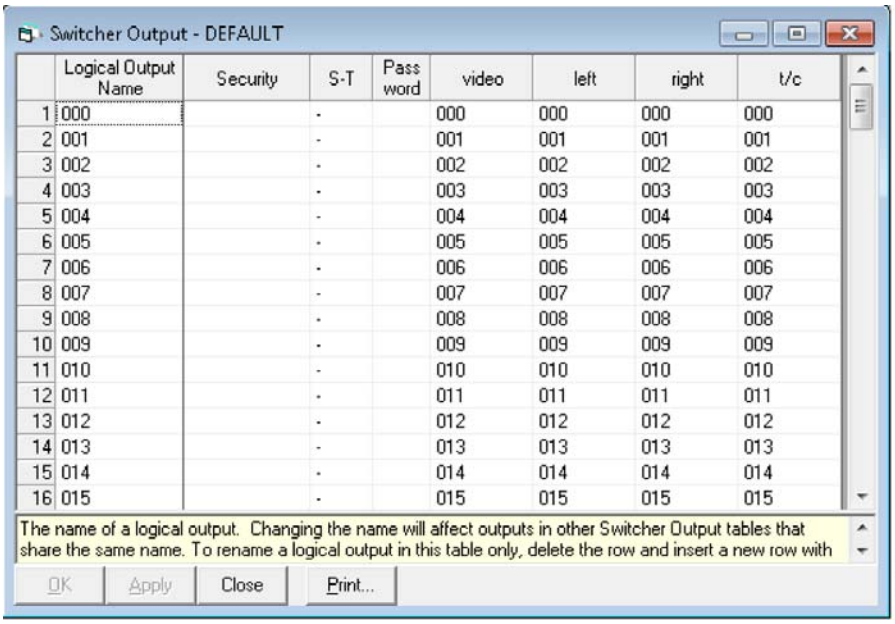

8766-sc34-r0

The Switcher Output table is used to give each physical output a logical name in the Logical Output Name column. These names can be up to eight characters in length. One table must be defined for each switcher in the system.

In Venus DM 400B data switching applications, the Switcher Output table is used to assign a logical name to each physical port connected to a "controller" device.

Security

Unlike the Switcher Inputs table, the outputs table has several provisions for security.

A Security Board can be identified for an output by entering the name of a controller board in the *Security* field (such as "CM1"). This setting would limit switching the output to only controls that are connected to that board. The name must be one of those already entered in the *Switcher Level Descriptions*.

A Security Board Type can be entered in the *S-T* field. Only controls connected to a control board of that type could then be used to switch the output. A dash ("–") entry in the *S-T* field means "none." The board types that can be selected are "VM" and "SI."

A Password level can be entered in the Password field for the output. This option is described in *Set Switcher Output Password Levels* on page 150.

Enter/Edit Output Names and Numbers

In most cases, you will want to modify the set that is currently active; if so, you may want to copy the active set and select the copy for editing. For more information, please see *Copy Configuration Set* on page 132.

Note On the top of the Jupiter Configurator window on the title bar, you will see the name of the Configuration set. Check to see whether the configuration set that you want to change is selected.

Follow these steps to enter Output names and numbers:

1. Select the Switcher Output option from the Jupiter menu (Jupiter> Switcher Output). The Switcher Output table will then open.
2. Enter/edit the preferred logical name and physical output numbers for this output.

Note Mars physical output numbers, when controlled by a Jupiter system, are not continuous. For example, physical output numbers 8 through 15 are skipped. For more information, refer to the Crosspoint/ Jupiter control section in the Mars manual.

3. Add new inputs at the end of the tables.

   Row numbers on Jupiter tables are used as the logical numbers for sources. Changing the row number of an existing source on the Switcher Output table will cause panels to control different outputs than those to which they had been assigned.

   The memory on the controller boards will need to be cleared and reset (see *Clearing Persistent Memory (PMEM)* on page 107). Adding new outputs at the end of tables will help to avoid this interruption.

Note Some switchers (such as Apex, late• model Trinix, Concerto, and Triton) use "1" as the first connector number. In this case, the physical output number for this connector, as entered on the table, is "0." Connector "2" is physical output number "1," etc.

4. Save the changes by selecting Save from the File menu (File > Save).
5. Click the **OK** button to save the table.

Set Switcher Output Password Levels

In addition to individual Jupiter passwords assigned to each user, individual switcher outputs can be given a password level. This password can be used to provide varying levels of protection from one switcher output to another.

Note Output passwords are not honored by automation protocol handling.

In most cases, you will want to modify the set that is currently active; if so, you may want to copy the active set and select the copy for editing. For more information, please see *Copy Configuration Set* on page 132.

On the top of the Jupiter Configurator window on the title bar, you will see the name of the Configuration set. Check to see whether the configuration set that you want to change is selected.

Follow these steps to set the password level for Switcher outputs:

1. Select the Switcher Output option from the Jupiter menu (Jupiter> Switcher Output). The Switcher Output table will then open (Figure 131).

   In this example, the password level column is blank, meaning that all outputs have a password level of zero. Therefore all passwords presently assigned will allow changing the signal being sent to any output.

2. Click on the password field that you want to change.
3. Enter the preferred password level for this output. Entering a level of "50" would mean that only passwords having levels of 50 or more could be used to enable selection of an input for this output.

4. Save the changes by selecting Save from the File menu (File > Save).
5. Click the **OK** button to save the table.

Control Panel Sets Dialog Box

The Control Panel Set dialog is where the inputs, outputs, levels, sequences, and overrides for the control panels in the system are defined. This dialog is dynamic and will change according to the sets that are selected.

Once a set has been created, selecting the type of set will open that sets table. This table is where the configuration information is stored.

This section provides the steps that will be used for all of the Control Panel sets. For example, *Control Panel Input Set*, *Control Panel Output Set*, *Control Panel Level Set*, *Control Panel Category Set*, *Control Panel Override Set*, *Control Panel Sequence Set*.

Figure 132. The Control Panel Set Dialog Box

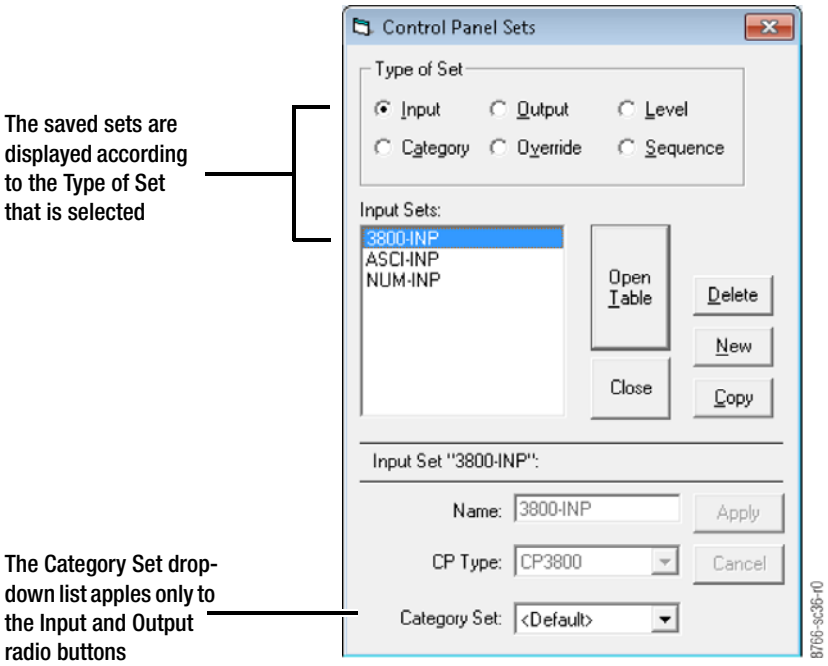

Follow these steps to create a CP set:

1. Select the Control Panel Sets from the Jupiter menu (Jupiter> Control Panel Sets...) or press the **F8** key on your keyboard. The Control Panel Sets dialog will then open.

Note Selecting a particular type of set will change the name of the window below the Type of Set area. For example, the window is called Input Sets if the Input radio button is selected (Figure 132 on page 172).

2. Select the appropriate radio button in the Type of Set area of the dialog. The names of any previously created set will then appear in the sets: window.
   - The Category Set drop-down list will only be seen if the Input and Output radio button is selected.

   The buttons will be grayed out.
3. Enter an eight character name for the Input set in the *Name* field.
4. Select the "CPESXTND" CP Type option from the drop-down list.
5. Select a CP set from the Category Set drop-down list or use the "default" option, as appropriate.
6. Click the **Apply** button. The name of the new output will then appear in the Output Sets: window. The buttons will become active.

Control Panel Level Set

The CP Level Set table is used to assign levels to control panels. In most cases, control panels are allowed to control all levels, but creating multiple CP Level Sets allows restricting control to certain levels. Level Sets are assigned to individual control panels on the MPK Devices table.

For steps activating the Control Panel Set dialog, see *Control Panel Sets Dialog Box* on page 172.

Follow these steps to create a Level set:

1. Select the **Level** radio button in the upper-right corner of the Type of Set area of the dialog. The names of any previously created Level set will then appear in the Level Sets: window.
2. Enter an eight character name for the Level set in the *Name* field.
3. Select a Category set from the CP Type drop-down list or use the "default" option.
4. Click the **Apply** button (Figure 133). The name of the new level will then appear in the Level Sets: window.

Figure 133. The Control Panel Set Dialog Box – Create Level Set

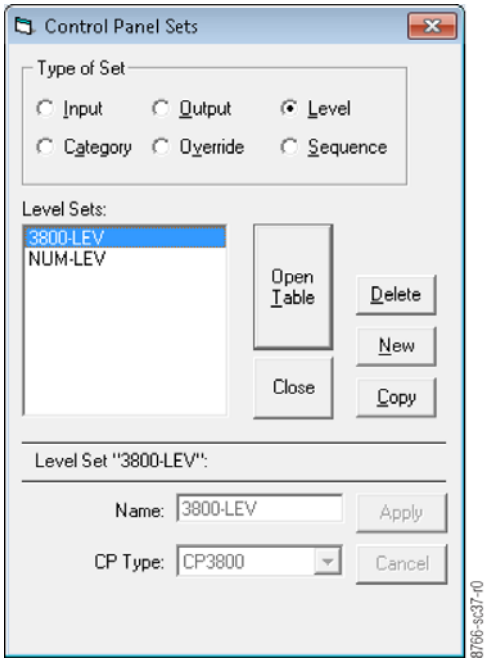

5. Select the new Level table and then click the **Open Table** button. The Level Set table will then open.

Figure 134. The Control Panel Set Dialog-Create Level Set

CP Level Set — KXYZ–LVL

	Mnemonic	Level	Break	Switch
1	VID	VIDEO (MAINROUT)	☑	☑
2	LEFT	LEFT (MAINROUT)	☑	☑
3	RGHT	RIGHT (MAINROUT)	☑	☑
4	TC	TC (MAINROUT)	☑	☑

07187660_CPLevel.

Entering Level Information

Follow these steps to enter the information in the CP Level Set table:

1. Enter a name or an ID in the Mnemonic column. The information in the Mnemonic column of this table is the source for the ID of each level that will appear on control panels during input selection.

2. Select the preferred option from the Level drop-down list. The Level column determines the order in which the switcher levels will appear in the control panel status display. Video is normally listed first. In the example shown in Figure 134 on page 174, the order from left to right will be video, left audio, right audio, and time code. The first level entered will also be the level statused where display space is limited.

   The Break and Switch check boxes are not supported by AccuSwitch.

3. Save the changes by selecting Save from the File menu (File > Save).
4. Click the **OK** button to save the table.

Level Numbering and External Control Computers Using ASCII Protocol

The ASCII protocol switching instructions include specification of output, input, and level; with level indicated by a number from 1 to 7. These level numbers correspond to the order in which levels are listed on the CP Level Set table. In the example table shown in Figure 134 on page 174, the ASCII level numbers would apply to the switcher levels as follows:

Table 9. Level Numbering Using the ASCII Protocol

Level number used with ASCII protocol	Example level shown on CP Level Set table
1	VIDEO
2	LEFT
3	RIGHT
4	T/C

Do not confuse these ASCII level numbers with the logical and physical level numbers of the switcher, which may be different. (The level names on this table are translated to logical and physical level numbers on the Switcher Description table.) For more information see ASCII protocol.

Control Panel Input Set

The Control Panel (CP) Input Set tables are used to link particular category / entry numbers, and mnemonics, to switcher input names.

Categories are classes of inputs/outputs. The factory default category sets can be used; or, custom category sets can be created. Example: “TEST” as the category for all test signals. The category is always followed by:

- An entry number, which defines the unit within the category. To continue with the above “TEST” example, after pressing “TEST,” the operator presses the “1” key to switch to the color bar input. Note that the entry number is not the same as the switcher input/output number.
- A mnemonic is an abbreviation, usually with a maximum length of eight characters, for a particular switcher input or output. This is the abbreviation that appears in the status windows of the control panels. Example: “VT01” as a display mnemonic for switcher input 001.

Creating an Input CP Set

For steps activating the Control Panel Set dialog, see *Control Panel Sets Dialog Box* on page 172.

Follow these steps to create an Input CP set:

Figure 135. The Control Panel Set Dialog

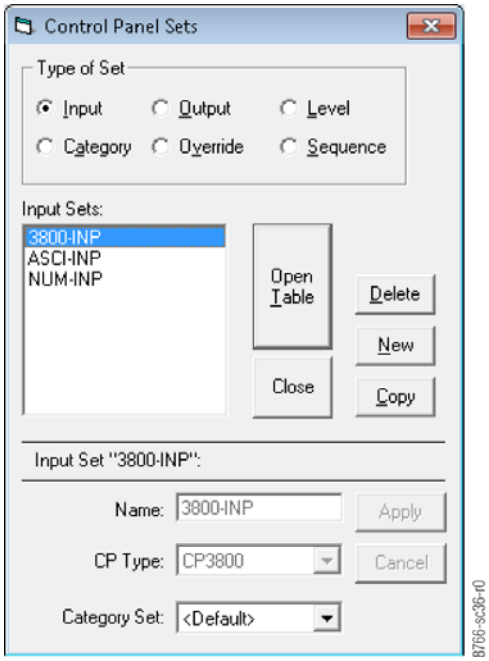

1. Select the **Input** radio button in the upper-left corner of the Type of Set area of the dialog. The names of any previously created Level set will then appear in the Level Sets: window.

   The buttons will then become grayed out.

2. Enter an eight character name for the Input set in the *Name* field.

3. Select the "CPESXTND" option from the drop-down list.

4. Select a Category set from the drop-down list or use the "default" option.

5. Click the **Apply** button (Figure 135). The name of the new output will then appear in the Output Sets: window.

6. Select the Input set in the Input Sets window.

7. Click the **Open Table** button. The Input Set table will then open (Figure 136).

Figure 136. The Input Set Table

Input Set — KXYZ–INP							
	Category		Entry	Auto Mnem	Mnemonic	Logical Input	
1	Test	▼	1	☑	BARS	BARS	▼
2	Test	▼	2	☑	TONE	TONE	▼
3	Test	▼	3	☐	CODE	TC	▼
4	VTR	▼	1	☑	VT01	VT01	▼
5	VTR	▼	2	☑	VT02	VT02	▼
6	VTR	▼	3	☑	VT03	VT03	▼
7	VTR	▼	4	☑	VT04	VT04	▼
8	VTR	▼	5	☑	VT05	VT05	▼

Entering Information – Input Set Table

Follow these steps to enter information into a CP Input set:

1. Select a category type from the Category drop-down list. This category is used to group inputs. Each category is assigned to a button on the control panel.
2. Enter a unique number in the Entry column. This entry assigns the input to a button on a control panel for the chosen category. The entry number must be unique for all rows that use the same category.
3. Check the **Auto Mnem** check box to automatically set the mnemonic to the name of the logical input. Mnemonic may be truncated for 4-character panels.
4. Enter a mnemonic that will identify the input on the control panel's display in the Mnemonic column.

Note If "Auto Mnem" is set, this field is automatically set to the name of the logical input. Panel mnemonic length limit is enforced.

5. Enter an input in the Logical Input column. This input will be associated with the chosen category, entry number and mnemonic.
6. Save the changes by selecting Save from the File menu (File > Save).
7. Click the **OK** button to save the table.

Copy a CP Input Set to Use With a Different Panel Type

After you have created a CP Input or Output Set for one panel type, you may want to copy it for use with a different panel.

Follow these steps to copy a CP Input set for use with a different panel type:

1. Select the Control Panel Sets from the Jupiter menu (Jupiter> Control Panel Sets...) or press the **F8** key on your keyboard. The Control Panel Sets dialog will then open.

2. Select the **Input** radio button in the upper-left corner of the Type of Set area of the dialog. The names of any previously created Level set will then appear in the Level Sets: window.
   - Select the **Output** radio button for an Output set.
3. Select the name of the input set (or the output) that you want to copy.
4. Click the **Copy** button. The phrase "Copy "<Input Set name>" to new set:" will appear below the Input Sets window.
5. Enter a name for the copy in the Name field.
6. Click the **Apply** button.
7. Open the new CP Input Set table (or Output Set table) and make the necessary changes, if any.

Note If you convert a CP Input set for use with a serial control device (such as an external computer), make sure there is a unique number for every row in the Entry column.

Figure 137. The Control Panel Set Dialog-Create Input Set

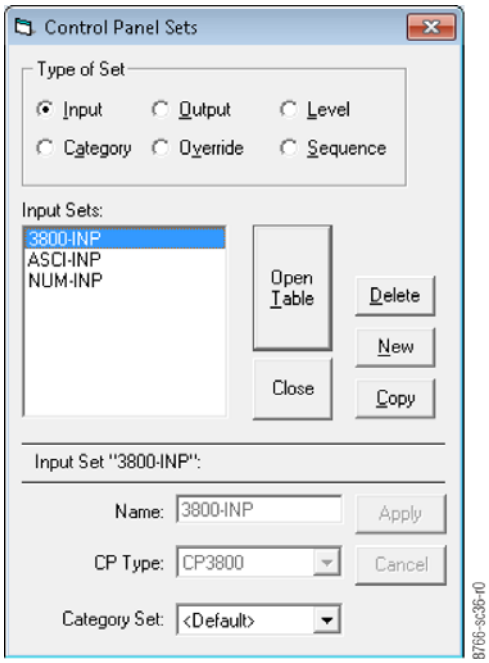

8. Save the changes by selecting the Save option from the File menu (File > Save).
9. Click the **OK** button to save the table.

Control Panel Output Set

The Control Panel (CP) Output sets are assigned to the specific control panels, which are defined on *MPK Devices Table* on page 190.

Do NOT give an Output Set the same name as an output. Using an extension such as "OUT" is recommended to help avoid potential conflicts.

Since each control panel can be assigned a different CP Output Set, these sets are usually used to control access to outputs on a panel-by-panel basis:

- You may want a control panel in the master control room to have access to all possible outputs. This panel might be assigned to Output Set "MC-OUT," which includes a category/number entry for all destinations.
- You may want a control panel in a particular department to have access to only a selected number of outputs. This panel would be assigned to an Output Set (such as "NEWS-OUT") which has only those outputs listed.

Note If you want the panel to be restricted to a single output, you could instead use the technique already described, whereby the name of the output, rather than the name of an Output Set, is entered on the MPK Devices table.

Create a CP Output Set

For steps activating the Control Panel Set dialog, see *Control Panel Sets Dialog Box* on page 172.

Figure 138. The Control Panel Sets Dialog - Output Set

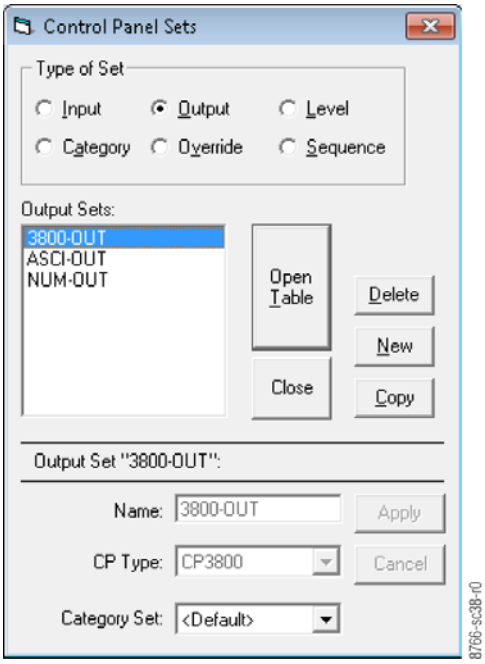

Follow these steps to create a CP Output set:

1. Select the **Output** radio button in the upper-center of the Type of Set area of the dialog. The names of any previously created Level set will then appear in the Level Sets: window.
2. Enter an eight character name for the Output set in the *Name* field.
3. Select the "CPESXTND" option from the CP Type drop-down list.
4. Select a Category set from the Category Set drop-down list or use the "default" option.
5. Click the **Apply** button (Figure 6). The name of the new output set will then appear in the Output Sets: window.
6. Select the new Output table and then click the **Open Table** button. The Output Set table will then open.

Figure 139. The Output Set Table

Output Set — NEWS–OUT

	Category	Entry	Auto Mnem	Mnemnonic	Logical Output	Level Set	Button
1	EJ	1	☑	NEW1	NEW1		
2	EJ	2	☑	NEW2	NEW2		
3	EJ	3	☑	NEW3	NEW3		

071876600_outputtableset

Enter Output Set Table Information

Follow these steps to enter information into a CP Output set:

1. Select a category type from the Category drop-down list. This category is used to group outputs. Each category is assigned to a button on the control panel.
2. Enter a unique number in the Entry column. This entry assigns the output to a button on a control panel for the chosen category. The entry number must be unique for all rows that use the same category.
3. Check the **Auto Mnem** check box to automatically set the mnemonic to the name of the logical output. Mnemonic may be truncated for 4-character panels.
4. Enter a mnemonic in the Mnemonic column that will identify the output on the control panel's display.

Note If "Auto Mnem" is set, this field is automatically set to the name of the logical input. Panel mnemonic length limit is enforced.

5. Enter an output in the Logical Input column. This output will be associated with the chosen category, entry number and mnemonic.
6. Save the changes by selecting Save from the File menu (File > Save).

7. Click the **OK** button to save the table.

Optional Entries

1. Select a Level set from the Level Set drop-down list. This set is used for assigning a CP Level Set to individual outputs (multiple switcher installations).

   The Level Set column is used when there are multiple switchers in the system and you want the control panels to control and status more than one switcher.

2. Enter a number in the Button column. The button number can be used to permanently assign an output to a button on an expansion panel.

3. Save the changes

Copy CP Output Set to Use with a Different Panel Type

See *Copy a CP Input Set to Use With a Different Panel Type* on page 177 for the steps to copy a set.

Control Panel Override Set

The override function, which allows single–keystroke selection of a source, is used for a quick or emergency switch to an often–used input. For example, the black burst generator could be defined as the first “override” source for the system, corresponding to the first soft key position on a control panel. When in a hurry to find black burst, the operator can then press BLK, TAKE (instead of, for instance, TEST, 1, TAKE).

Override sets are also used to assign an input to each button on a control panel. The order in which the overrides are listed on this table will be the order in which they appear on the panels.

Defining Overrides

On the top of the Jupiter Configurator window, ensure the configuration set that you want to change is selected for editing. For steps activating the Control Panel Set dialog, see *Control Panel Sets Dialog Box* on page 172.

Figure 140. The Control Panel Set - Override Set

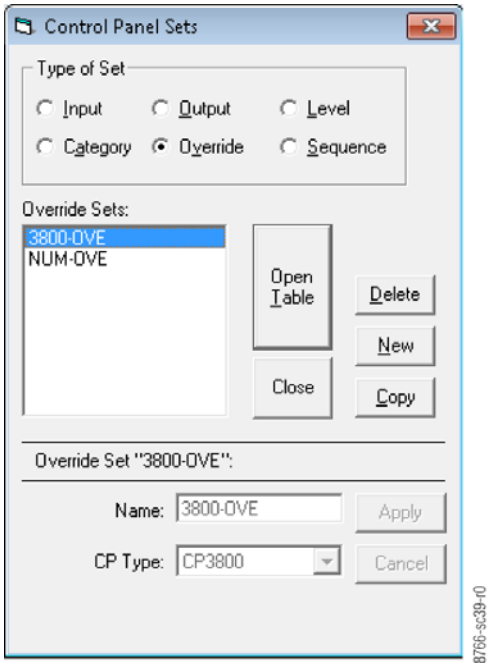

Follow these steps to define an override:

1. Select the **Override** radio button in the lower-center of the Type of Set area of the dialog. The names of any previously created Override set will then appear in the Override Sets: window.
2. Enter an eight character name for the Override set in the *Name* field. Do NOT use the same name for different CP sets. Also, do not name a CP set with a name used by the system for a Device Type.
3. Select the appropriate option from the CP Type drop-down list.
4. Click the **Apply** button. The name of the new output set will then appear in the Override Sets: window.
5. Select the new Override table and then click the **Open Table** button. The Override Set table will then open.

Figure 141. The Override Set Table

CP Override Set — KXYZ–OVE

	Override	Logical Input	Edit	Levels
1	BLK	BLK	☑	YYYY ...
2	BARS	BARS	☑	YYYY ...
3	TONE	TONE	☑	YYYY ...
4	SLNC	SLNC	☑	YYYY ...
5	Usr1	BLK	☑	YYYY ...
6	Usr2	BLK	☑	YYYY ...

071876600_Overidetable

Enter Override Set Table Information

Follow these steps to enter information into a CP Override set:

1. Enter a unique name in the Override column.
2. Select the name of the switcher input for the first override button from the drop-down list in the Logical Input column. The source of these names is the Switcher Input table
3. Select (or place a check in) the **Edit** check box if you want panels to change the override.
4. Select the Levels that you want to switch by clicking in the appropriate Levels field. A secondary dialog box showing the names of existing switcher levels will then appear.
   a. Toggle the preferred levels on or off.
   b. Click the **OK** button.
5. Save your changes and then click the **OK** button.
6. Validate, compile, and then activate the configuration set.

Control Panel Sequence Set

A sequence is a switch of one or more sources to one or more destinations. AccuSwitch is limited to 25 sequences if legacy boards are defined (For example, VM, SI, SB, and Saturn) or 100 sequences if only AccuSwitch boards are defined.

Sequences are stored as sequence sets; these sets can be made available to some or all control panels. Sequences can include outputs not otherwise available to a panel. For example, when the outputs are not entered on the CP Output Set assigned to the panel.

Data matrixes can be part of sequences when used in conjunction with the DM 400 Off Time feature. No more than 25 DM 400 safe off time switches should be saved per sequence. Safe off time in sequences must be used with care as specifying too short of a safe off time may result in the switch occurring too soon; this could result in switches occurring out of sequence.

Great care needs to be used to ensure that the switches defined in CP Sequence Sets involving Data Routers do not conflict. Verify that each sequence uses all defined data router inputs and outputs just once, including the implied reverse switches. Failure to do this will result in unintended switches, and possibly switching a single input to multiple outputs at the same time.

Defining a Sequence Set

On the top of the Jupiter Configurator window, ensure the configuration set that you want to change is selected for editing. For steps activating the Control Panel Set dialog, see *Control Panel Sets Dialog Box* on page 172.

Follow these steps to define a sequence:

1. Select the Sequence radio button in the lower-right of the Type of Set area of the dialog. The names of any previously created Sequence set will then appear in the Sequence Sets: window.
2. Enter an eight character name for the Sequence set in the *Name* field. Do NOT use the same name for different CP sets. Also, do not name a CP set with a name used by the system for a Device Type.
3. Select the appropriate option from the CP Type drop-down list.
4. Click the **Apply** button the new sequence will appear in the Sequence Sets window (Figure 142 on page 184).

Note When both AccuSwitch and legacy boards are defined in the same system, a sequence that is used for an AccuSwitch controlled L-S-LCD or GUI panel may not be used by a legacy control panel (for example, MPK, CP3000, CP3800).

Figure 142. Control Panel Sets - New Sequence

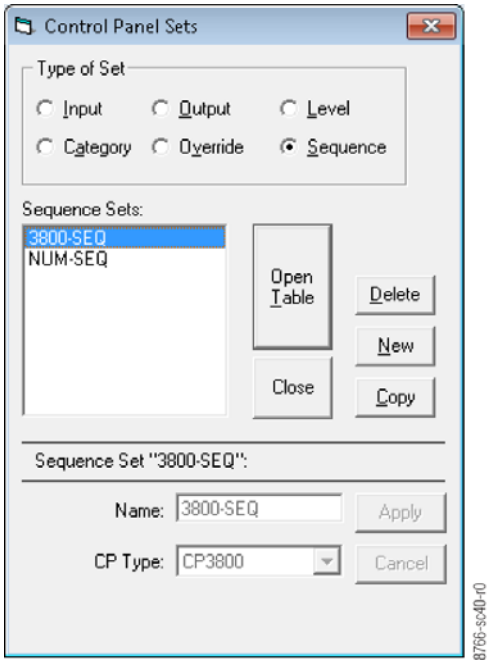

5. Click the **Open Table** button to open the sequence. The Sequence Set table will then appear (Figure 143).

Figure 143. The Sequence Set Table

Sequence Set – KXYZ–SEQ

	Sequence	Logical Input		Logical Output		Levels	
1	SEQ1	VT01	▼	PRDA	▼	YYYY	...
2	SEQ1	VC01	▼	PRDB	▼	YYYY	...
3	SEQ1	VC02	▼	PRDC	▼	YYYY	...
4	SEQ2	CAM1	▼	MON1	▼	YNNN	...

071876600_SequenceSetTable

Adding/Editing Sequences

Follow these steps to add (or edit) a sequence:

1. Enter a name for the first sequence by typing a name in the Sequence column.
2. Select the first input name from the Logical Input column's drop-down list. (The source for these names is the Switcher Input table).
3. Select the first output name from the Logical Output column's drop-down list.
4. Double-click in the Levels column's field. The Level Select dialog will then appear.
   a. Select the Levels to activate from the available Levels.
   b. Click the **Ok** button.
5. Save your changes and then click the **OK** button.
6. Validate, compile, and then activate the configuration set.

Control Panel Category Set

The CP Category Set table allows the category names to be customized. (Categories are classes of inputs/outputs, such as "CAM.") This table is the source of the name that appears in the display window when a category key is pressed.

A CP Category Set is normally assigned to a CP Input Set and to a CP Output Set when those sets are first created. However, this assignment can be changed later if preferred. The CP Input and Output Sets are in turn assigned to specific control panels on the MPK Devices table.

Each Category Set can contain up to 98 category mnemonics; if less than 20 categories are entered, the remaining category keys will be inoperable.

Defining Categories

For steps activating the Control Panel Set dialog, see *Control Panel Sets Dialog Box* on page 172.

Figure 144. Control Panel Sets - Category

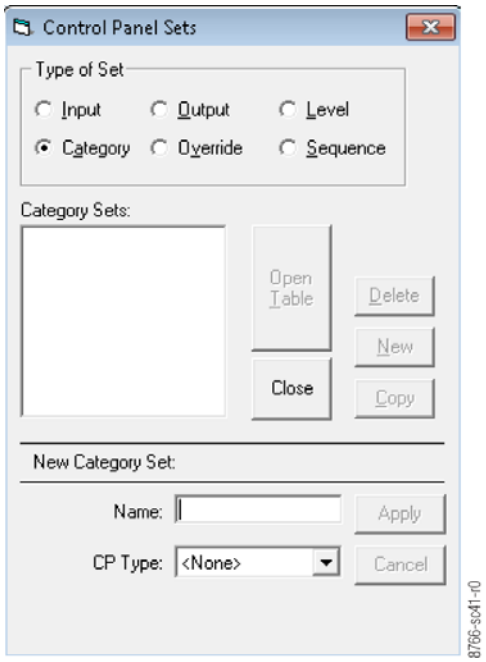

Follow these steps to define a category:

1. Select the **Category** radio button in the lower-left of the Type of Set area of the dialog. The names of any previously created Categories set will then appear in the Categories Sets: window.
2. Enter a name for the category set in the *Name* field.
3. Select the appropriate CP type from the CP Type drop-down list.
4. Click the **Apply** button the new sequence will appear in the Sequence Sets window.

Change Category Set Associated With an Input or Output Set

A custom Category Set can be created at any time. The following procedure is used to assign a new Category Set to an existing CP Input Set or CP Output Set.

1. Select the Input or Output radio button in the Type of Set area of the dialog. The names of any previously created inputs or outputs will then appear in the Categories Sets: window.
2. Select the name of the existing set of interest.

3. Enter the name of the new Category set in the Name field.
4. Select the appropriate option from the CP Type drop-down list. If you want to return to the factory default category set, leave the Category Set name as "Default."
5. Save your changes and then click the **OK** button.

Figure 145. Control Panel Sets - New Sequence

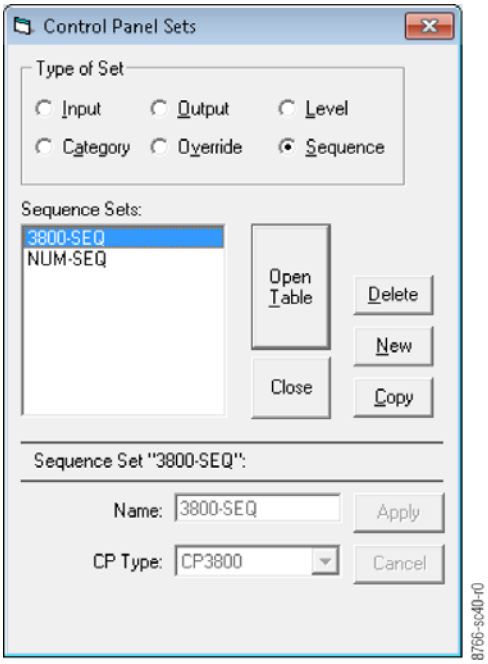

6. Click the **Open Table** button to open the sequence. The Sequence Set table will then appear.

Figure 146. Category Sets Table

Category Set – 3200-CAT	
	Mnemonic
1	VTR
2	Font
3	Net
	•
	•
	•
19	Aud

071876800_CategorySetsTable

CPESXTND Sets

The following examples show the CPESXTND Category Sets, which can be configured using the Control Panel Sets dialog (see Figure 147, Figure 148, Figure 149, and Figure 150).

CPESXTND CP Type

Figure 147. "CPESXTND" Category Type

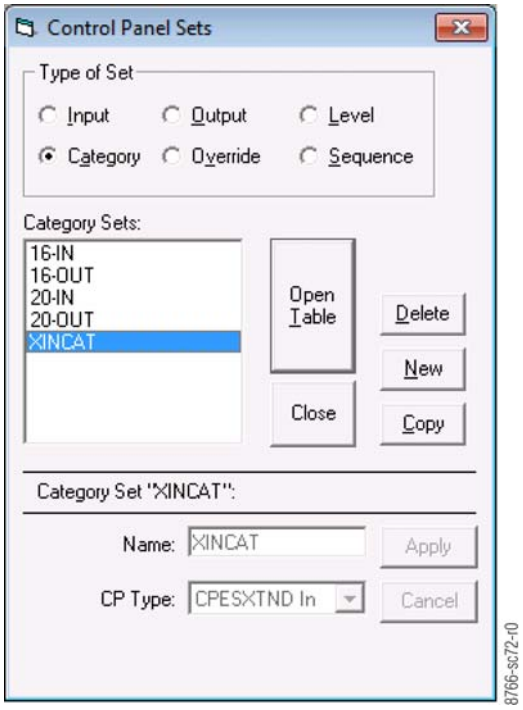

CPESXTND Output CP Type

Figure 148. CPESXTND Output CP Type

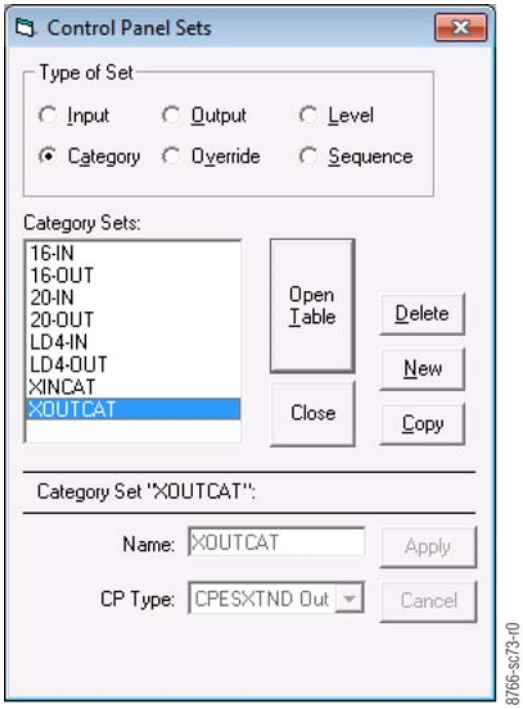

CPESXTND Input Set

Figure 149. CPESXTND Input Set

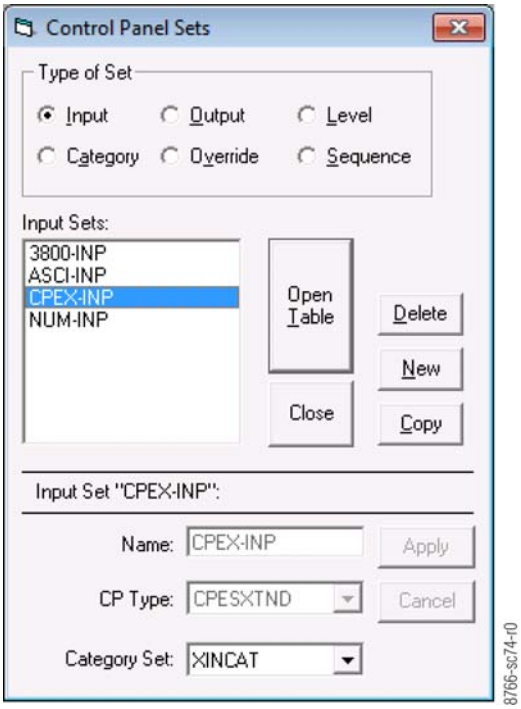

CPESXTND Output Set

Figure 150. CPESXTND Output Set

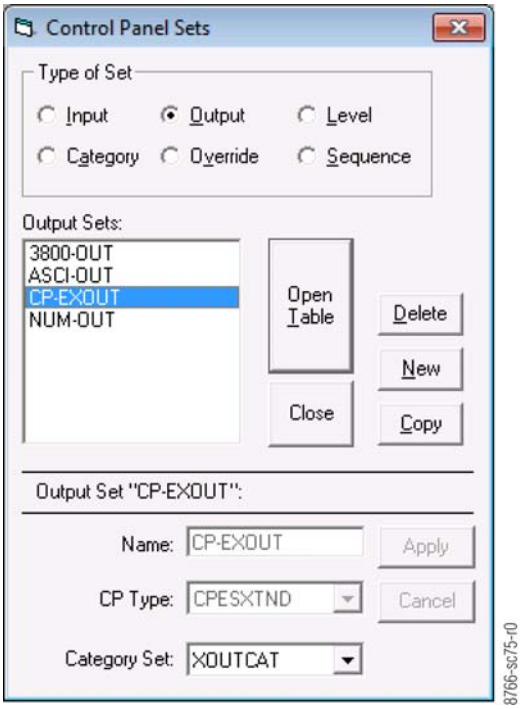

Category Selection and Error

A Device Type can be selected in the MPK Devices Table by selecting the Device Type field and then selecting the desired option from the drop-down list. The example shown in Figure 151 on page 190 shows the CPESXTND Device type being selected.

Figure 151. "CPESXTND" Selection

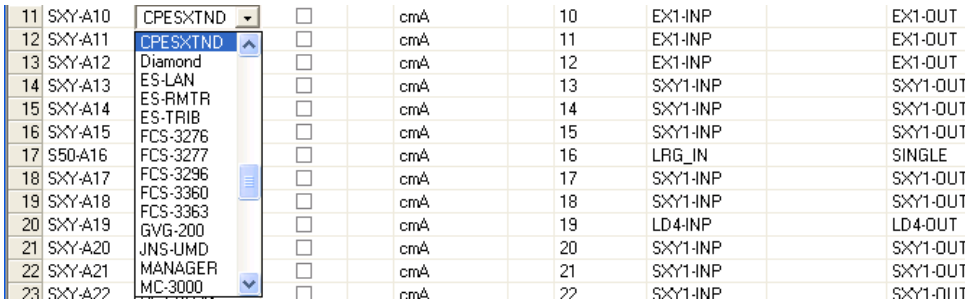

CPESXTND device types use control panel input and output sets of type "CPESXTND."

MPK Devices Table

Note MPK Devices are not supported by the AccuSwitch application. However, the MPK Devices table is used for various configurations. For example, passwords, and device type settings.

The MPK Devices table is used when a PC is used as a Software Control Panel. Password levels are also configured using this table. The MPK table is used to configure the L-S and LCD panels using the CPES-SER type, which is required for the 98 categories features.

The CPESXTND category has been added to Device Type column of this table. The CPESXTND device type is allowed to have 100 Event Sequences.

Note In previous releases of the Jupiter system, a Serial port had to be defined in the Serial Protocol table and a serial device needed to be defined on that port in the MPK Devices table. If a serial connection was not defined, the CM-4000 board would not start successfully. In the 7.8.1 version of Jupiter, Jupiter XPress and AccuSwitch boards will operate without a serial device defined.

Figure 152. The MPK Devices Table

MPK Devices

	MPK Devices	Device Type	Expansion	Pass word	Board	Port	Address	Input Sets	In Panel	Output Sets	Out Panel	Level Set	Overide Set	Sequence Set
1	CP1	CPES-SER	☐		CM1	1	01	CP_IN		CPOUT		CP_LEV		
2	CP2	CPES-SER	☐		CM1	1	02	CP_IN		CPOUT		CP_LEV		
⋮														
16	CP16	CPES-SER	☐		CM1	1	16	CP_IN		CPOUT		CP_LEV		
17	CP17	CPESXTND	☐		CM1		01	CP_IN		CPOUT		CP_LEV		

MPK Devices Table Description

MPK Devices column: This column is used to create a name for each MPK device in the system. Enter a name that is up to eight characters in length.

Device Type column: Select the preferred type from the Device Type drop-down list. Select type CPES-SER for panels to use up to 98 categories and CPESXTEND to use the 100 Event sequences (or Salvos) feature.

Expansion check box: The Expansion box is checked when the panel is used with an expansion panel. Not used for L-S or LCD Panels.

Password column: Enter a number from 0 to 99 to assign a password level (see *Passwords* on page 144).

Note Setting a password level 90-99 will allow the Visual Status Display (VSD) to force unlock or un-protect any panel. See the Jupiter AccuSwitch Soft Panels and Visual Status Display Instruction Manual for more information.

Board column: The name of CM-4400 connected to the control Panel. The source of this name is the Jupiter Network Description table.

Port column: The port number that is configured for ESCP to which the panel is connected. ESCP is defined in the Serial Protocol Table.

Address column: The panel address from 1 to 16 for ESCP (serial panels) and 1 to 64 for LAN panels. This address must be unique for panels sharing the same CM-4400 serial port. Panels are normally shipped with a panel address of “01.” This number is referred to as the “Device Number” on the IP configuration page and “ID” within the L-S or LCD Panels MENU system.

Input Sets column: Input and output set types should be CPESXTND for Device type CPES-SER.

In Panel columns: This column is used only for configuring an expansion panel. This column is not used for L-S or LCD panels.

Out Set column: Input and output set types should be CPESXTND for Device type CPES-SER. If the entry is an actual CP Output Set, then the control panel will be able to control all the outputs listed in that Set. Depending on the con tents of the set, this would allow for full-matrix or multi-bus control.

Out Panels column: This column is used only for configuring an expansion panel. This column is not used for L-S or LCD panels.

Level Set column: Select the CP Level Set name.

Override Set column: Select the CP Override set name.

Sequence set column: Select the CP Sequence set name.

Configure Control Panel for Full-matrix, Multi-bus, or Single-bus Control

The CP Output Set entry on the MPK Devices table determines which outputs can be controlled by a control panel. These steps assume that the MPK Devices table is already open.

Follow these steps to configure a Control Panel for Full-matrix, Multi-bus, Or Single-bus Control:

1. Click in the Output Set field that you want to change.
2. Enter the name of the preferred CP Output Set (for full/multi–bus operation), or select the name of a single switcher output (for single bus operation). For more information about creating an Output Set, see *Control Panel Output Set* on page 179. The source of the output names is the Switcher Output table.
3. Save your changes and then validate, compile, and activate the configuration set.

Zero-Downtime Feature

The Zero-Downtime feature is only supported in systems where every control board in the system is running AccuSwitch.

- If MPK panels are in the system, then the system contains Jupiter and/or Jupiter Xpress control boards; therefore, Zero-Downtime is not in effect.
- If a Jupiter control board exists in an AccuSwitch system, then a reboot of both AccuSwitch and Jupiter will happen on configuration changes.
- If AccuSwitch and Jupiter Xpress are in the same system, then both control boards use PENDING REBOOT.

Changes can be made in the AccuSwitch controller board's MPK Devices Table including, editing as well as inserting or deleting rows at the bottom of the table. These changes can then be downloaded without having to reboot the CM-4400 controller boards which imply "Zero-Downtime."

Row numbers on Jupiter tables are used as the "logical" numbers for devices. Attempting to either insert or delete rows at a location other than at the end of the table will disrupt control of the system and cause the following message to appear in the Compiler dialog box:

```
Inserting (or deleting) rows other than at the end of
the MPK Devices table will change the row numbers of
existing devices (below the insertion/deletion
point). This will require the controller boards to be
memory-cleared and reset.
```

One way to avoid this interruption to the system is to add new devices at the end of the Jupiter tables. Clearing or resetting the memory must be done through the Control Center (see *Clearing Persistent Memory (PMEM)* on page 107).

L-S or LCD Panels Entries

Although the L-S or LCD Panels are not actually MPK-type panels (the panels have an on-board microprocessor and do not use the Message per Key stroke protocol), the MPK table is used for configuration purposes. An example is shown below in Figure 152 on page 191.

Sequential Path Finding Table

The path finding software option allows two or more routing switchers to operate as a system, where one of the switchers can access the other's inputs through a number of tie lines.

Figure 153. The Sequential Path Finding Table

Tie lines (1-4)from "NEWSROUT" to "MAINROUT"

Tie lines (5-8) from "MAINROUT" to "NEWSROUT"

Sequential Path Finding

	Path Finding Group Name	Source Switcher/Level	Physical Output	Destination Switcher/Level	Phys Inp
1	VNEWMAIN	VIDEO (NEWSROUT)	10	VIDEO (MAINROUT)	43
2	LNEWMAIN	LEFT (NEWSROUT)	10	LEFT (MAINROUT)	43
3	RNEWMAIN	RIGHT (NEWSROUT	10	RIGHT (MAINROUT)	43
4	TNEWMAIN	TC (NEWSROUT)	10	TC (MAINROUT)	43
5	VMAINNEW	VIDEO (MAINROUT)	61	VIDEO (NEWSROUT)	20
6	LMAINNEW	LEFT (MAINROUT)	61	LEFT (NEWSROUT)	20
7	RMAINNEW	RIGHT (MAINROUT)	61	RIGHT (NEWSROUT	20
8	TMAINNEW	TC (MAINROUT)	61	TC (NEWSROUT)	20

The table shown in Figure 153, describes the tie lines between the two switchers, there are tie lines for all four levels of both switchers. In this example:

- The columns are arranged in "from-to" order. The rows 1-4 show the lines from a source router called "NEWSROUT" to a destination switcher called "MAINROUT." Rows 5-8 show the lines leading back to the "NEWSROUT" router.
- Row 1 describes lines from Input switcher "NEWSROUT." The NEWSROUT switcher's Video level starts with Physical Output 10.
- The NEWSROUT switcher's lines go to the Output switcher's Video level, whose Physical Input starts at 43.
- Since connections must be consecutive, outputs 10 through 14 of "NEWSROUT" are connected to inputs 43 through 47 of "MAINROUT."

When a switcher input or output is used with a tie line (such as Physical Output 10 in the above example) and entered in the Path Finding Data table, the input or output must not appear in the Switcher Input or Output tables.

For example, Figure 154 on page 195 shows a facility with a large, central distribution switcher and a smaller switcher. By placing both switchers under control of the Jupiter system, and by adding tie lines, the main router can access the news department's inputs. In this example, VT21 can be switched to output 55 of switcher "MAINROUT" with one command: the system will first switch VT21 to one of the tie lines leading from "NEWSROUT" to "MAINROUT," then it will switch that tie line signal to output 55 of "MAINROUT."

Figure 154. Example of Sequential Path Finding Connections

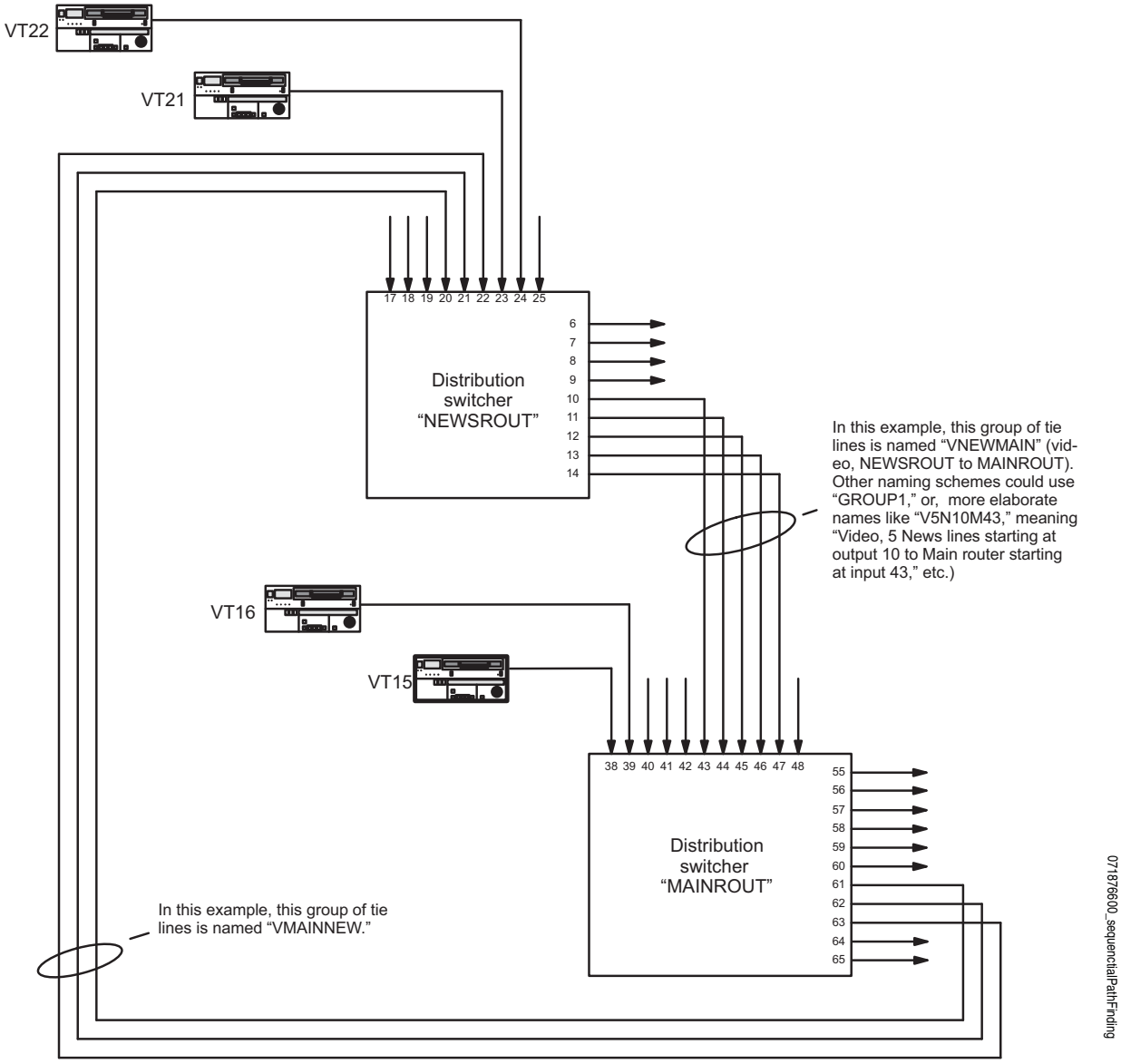

Path finding is not the same as three-stage switching. Path finding involves discrete switchers connected by a small number of tie lines, the number of which strictly limits the inputs available at the downstream switcher.

The control panel will indicate "Blocked" if all of the tie lines are busy and an attempt is made to switch to an additional upstream source. In order to release a tie line, a downstream output using a tie line must be switched to a local input. In the example shown in Figure 154, "MainRout" output 55 could be switched to VT16, or some other source known to be a local input (such as black burst). In some cases, it might be necessary to switch more than one downstream output to a local source, since the tie line could be feeding more than one destination. Since it may be difficult to determine the overall usage of a given tie line, the operator should switch away from the upstream switcher source when it is no longer needed.

Following hardware installation, path finding requires entries to the Path Finding Data table and selection of Group Names numbers on the Switcher Input tables (Figure 153 on page 193).

If the tie lines are wired non-sequentially, please refer also to *Non-sequential Path Finding Table* on page 200.

Path Finding – Three or More Switchers

It is possible to connect three switchers for path finding purposes. The recommended maximum is five switchers. This is illustrated in Figure 155. Notice that no tie lines directly connect switcher "A" and switcher "C."

Figure 155. Example of path finding connections between video levels of three switchers

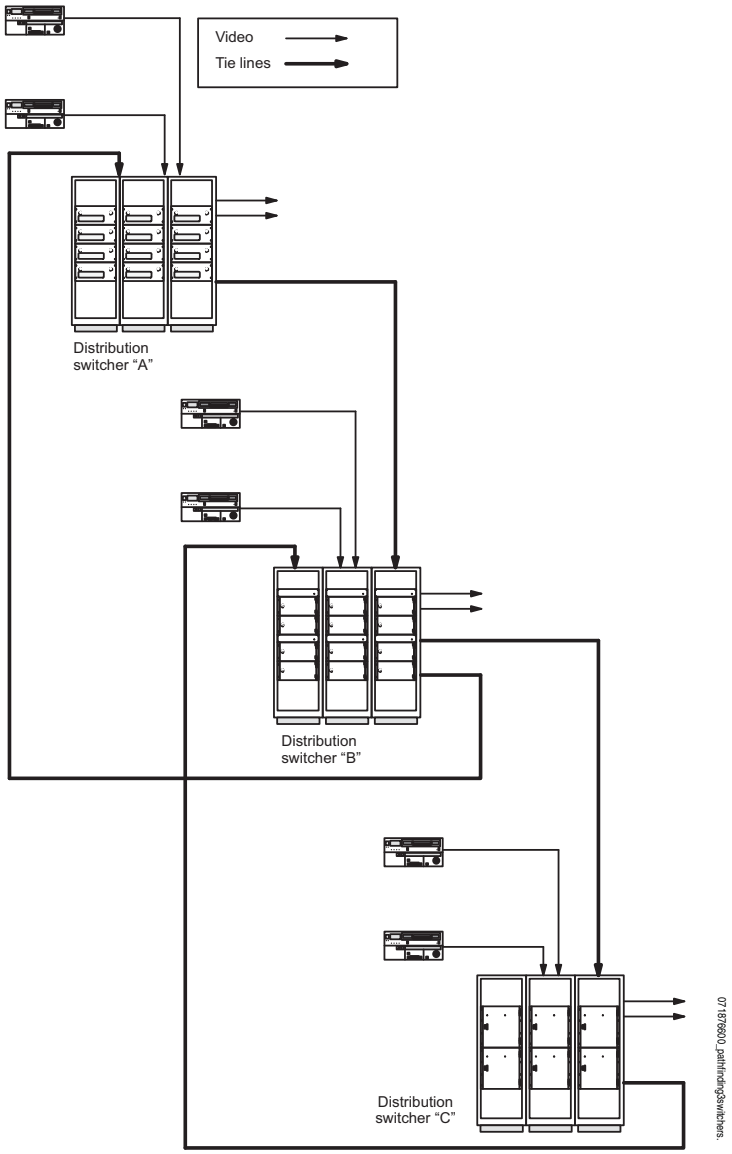

Note AccuSwitch only supports path finding between routers that are controlled by AccuSwitch.

Table Entries

For the example shown in Figure 155, there would be four descriptions of the tie lines in the corresponding Path Finding Data table:

- from “A” to “B”
- from “B” to “A”
- from “B” to “C”
- from “C” to “B.”

The Switcher Input tables would also have Group entries for all three switchers.

The switcher “A” table: The names of sources available through path finding would all be referenced to the tie lines from switcher “B” to “A.” This could include the sources that are wired directly to switcher “C.”

For the switcher “B” table: The names of sources available through path finding would be referenced to the tie lines from switcher “A” to “B,” AND from “C” to “B.”

For the switcher “C” table: The names of sources available through path finding would all be referenced to the tie lines from switcher “B” to “C.” This could include the sources that are wired directly to switcher “A.”

Path finding entries are generally needed only for switchers that are immediately adjacent. The system will use the entry information to find paths involving one or more intermediate switchers.

Alternate Routes – Manual Selection

There may be situations where wiring would allow manual selection of alternate routes. For example, in Figure 155 on page 196, the video lines would also exist between switcher “A” and switcher “C.” However, the Jupiter path finding software cannot take advantage of such alternate routes; in other words, Jupiter does not “switch around busy areas.” Only one possible route between each pair of switchers can be described on the Path Finding Data table when the system is configured.

Path Finding Between Analog and Digital Equipment

Convert Analog Signals to Combined Digital Signals

The Path Finding table can be used with customer-supplied Analog to Digital Converters (ADCs) and Digital to Analog Converters (DACs) to provide automatic conversion between analog equipment and digital equipment (such as VTRs). See Figure 156.

Figure 156. Example of ADC and DAC

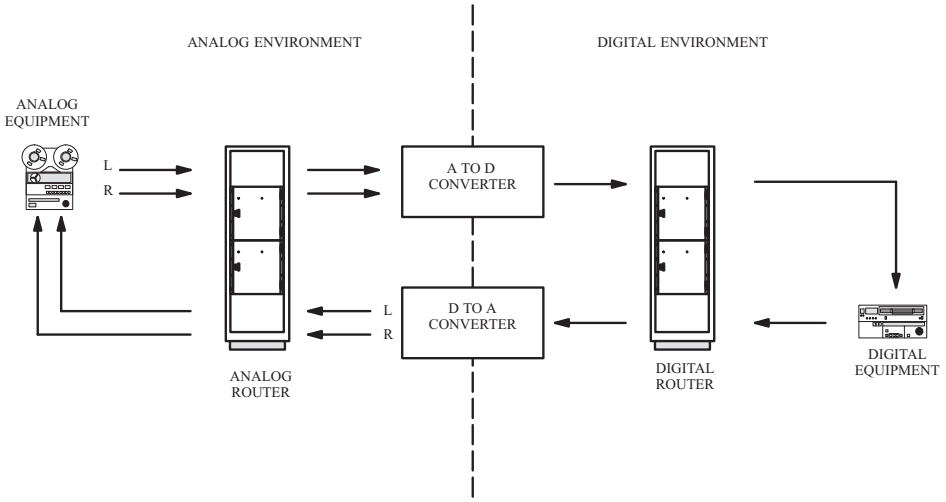

For example, this technique can be used for conversion of analog audio signals, which are carried on two levels of an analog routing switcher, to a single digital audio (AES) signal. The same concept can be applied in an embedded audio environment, where a single digital video stream can be split into an analog video signal and up to four analog audio signals.

It is possible to arrange a system so that the conversion will take place whenever the operator selects a particular source and switches it to a particular destination. For example, in the system shown in Figure 157, whenever the operator selects VTR1 as the source for VTR2, the analog audio signals will always pass through an A to D converter; when VTR2 is the source for VTR1, the digital signal will pass through a D to A converter.

Figure 157. Example of Automatic Conversion System

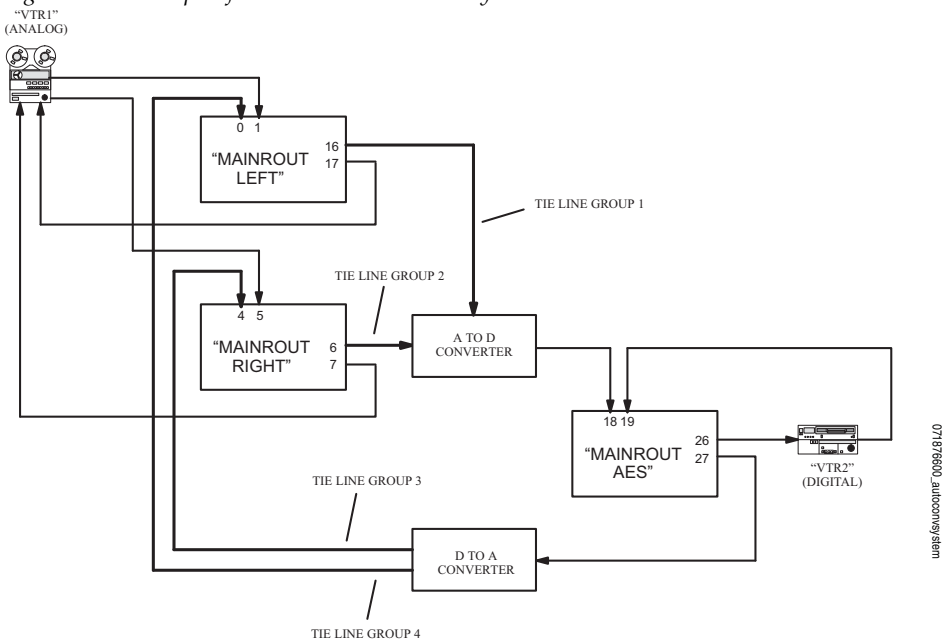

The system in the example would require four tie lines, with a dedicated A to D converter connected to the first pair and a dedicated D to A converter connected to the second pair. Each pair is locked together, meaning that selection of one result in selection of both.

The corresponding tables are:

- Switcher Description
- Sequential Path Finding
- Switcher Input-MAINROUT
- Switcher Output-MAINROUT

There are three rules governing this technique:

1. The path finding groups, in the Sequential Path Finding table, that are to be locked together MUST have identical digital Switcher Names, digital Level Names, and digital Physical Input/Output entries. These groups must be on consecutive rows of the Sequential Path Finding table.

2. In the Switcher Description table, the "MAINROUT LEFT" level and "MAINROUT RIGHT" level must be controlled by the same CM. However, the "MAINROUT AES" level may be controlled by another CM.

3. Any levels "sourced" by, in this case, the MAINROUT LEFT and RIGHT levels may not break away. This must be established by removing the check in the "Breakaway" check box in the CP Level Set.

Non-sequential Path Finding Table

The Non-Sequential Path Finding table must be used if the tie lines joining the switchers are not wired sequentially, that is, not wired as blocks. Basically, the table is designed to enter “exceptions” to the Sequential table. For example, a new tie line that falls outside the original sequence can be defined on the Non-sequential table; the only change then needed on the Sequential table would be to increment the “Count” number for the group by 1. (Alternatively, you may prefer to use the Non-sequential table to define all tie lines individually.)

Figure 158. The Non-Sequential Path Finding Table

Non−Sequential Path Finding

	Path Finding Group Name		Line Number	Physical Output	Physical Input
1	GROUP1	▼	3	83	87
2	GROUP1	▼	4	84	88
3	GROUP2	▼	3	83	87
4	GROUP2	▼	4	84	88
5	GROUP3	▼	3	83	87
6	GROUP3	▼	4	84	88
7	GROUP4	▼	3	83	87
8	GROUP4	▼	4	84	88
9	GROUP5	▼	2	82	20
10	GROUP6	▼	2	82	20
11	GROUP7	▼	2	82	20
12	GROUP8	▼	2	82	20

071876600_nonseqpathfind

An example system is shown in Figure 159 on page 201, with corresponding tables shown in Figure 160 on page 202. Notice that the Path Finding Data table, and the Switcher Input tables, must still be used as described in the previous section.

Figure 159. Example of Non-Sequential Path Finding

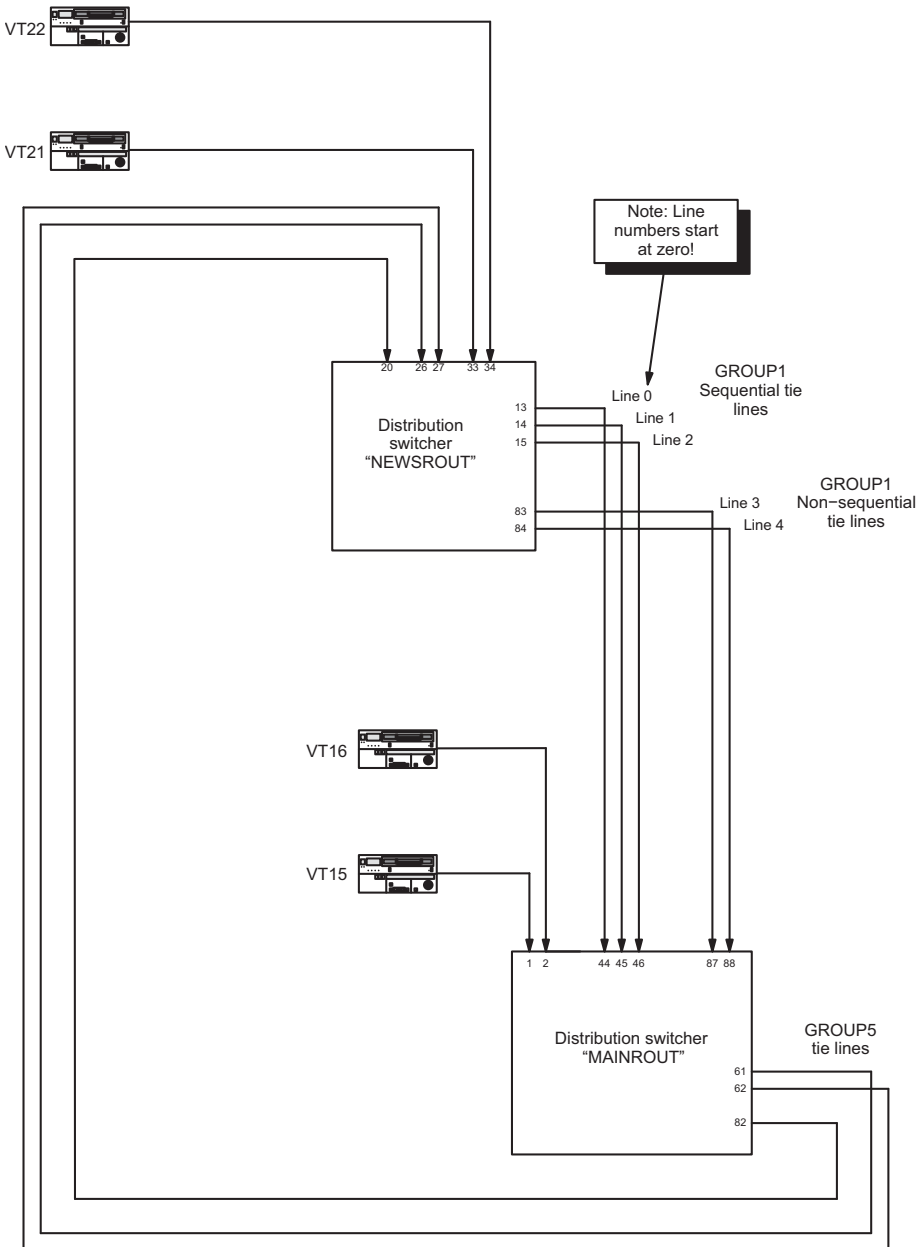

Figure 160. Path Finding and Switcher Inputs tables for system shown in Figure 159

See note 1 See note 1

Sequential Path Finding

	Path Finding Group Name	Source Switcher/Level	Physical Output	Destination Switcher/Level	Physical Input	Count
1	GROUP1	VIDEO (NEWSROUT)	13	VIDEO (MAINROUT)	44	5
2	GROUP2	LEFT (NEWSROUT)	13	LEFT (MAINROUT)	44	5
3	GROUP3	RIGHT (NEWSROUT)	13	VIDEO (MAINROUT)	44	5
4	GROUP4	TC (NEWSROUT)	13	TC (MAINROUT)	44	5
5	GROUP5	VIDEO (MAINROUT)	61	VIDEO (NEWSROUT)	26	3
6	GROUP6	LEFT (MAINROUT)	61	LEFT (NEWSROUT)	26	3
7	GROUP7	RIGHT (MAINROUT)	61	RIGHT (NEWSROUT)	26	3
6	GROUP8	TC (MAINROUT)	61	TC (NEWSROUT)	26	3

Tie lines from "NewsRout" to "MAINROUT"

Tie lines from "MainRout" to "NEWSROUT"

Note 1: You may wish to define each and every tie line on the Non−sequential table; however, it will still be necessary to enter some number in the Physical Output and Physical Input columns to satisfy the compiler.

GROUP1 Non−sequential tie lines

Non−Sequential Pathfinding

	Path Finding Group Name	**Line Number**	Physical Output	Physical Input
1	GROUP1	3	83	87
2	GROUP1	4	84	88
3	GROUP2	3	83	87
4	GROUP2	4	84	88
5	GROUP3	3	83	87
6	GROUP3	4	84	88
7	GROUP4	3	83	87
8	GROUP4	4	84	88
9	GROUP5	2	82	20
10	GROUP6	2	82	20
11	GROUP7	2	82	20
11	GROUP8	2	82	20

See note 2

Note 2: in this example, the same input/output numbers are used for the tie lines on each level; however, different inputs/outputs can be used, and entered on this table, if desired.

Switcher Input − NewsRout

	Logical Input Name	VIDEO	LEFT	RIGHT	TC
30	VT21	033	033	033	033
31	VT22	034	034	034	034
•					
•					
•					
45	VT15	GROUP5	GROUP6	GROUP7	GROUP8
46	VT16	GROUP5	GROUP6	GROUP7	GROUP8

Group nAME

Switcher Input − MainRout

	Logical Input Name	VIDEO	LEFT	RIGHT	TC
23	VT15	001	001	001	001
24	VT16	002	002	002	002
•					
•					
•					
45	VT21	GROUP1	GROUP2	GROUP3	GROUP4
46	VT22	GROUP1	GROUP2	GROUP3	GROUP4

071876600_Path Finding and Switcher Inputs tables

Configure an Exclusion Table

The Exclusion table can be used to prevent a particular input from being switched to a given output.

Note No exclusions are allowed on data levels.

Figure 161. The Exclusion Table

Exclusion				
	Logical Input		Logical Output	
1	MULTBRST	▼	XMIT	▼
2	SINESQ	▼	XMIT	▼

600_Exclusion-Data-Table

Follow these steps to configure the Exclusion table:

1. Select the input that cannot be switched from the Logical Input drop-down list.
2. Select the output to which the specified input cannot be switched from the Logical Output drop-down list.
3. Click the **Apply** button

Time Standard Table

The Time Standard table is used to identify one or more backup time sources for use if the time code source fails. Each CM-4400 in the system must be described (only one entry is required for a redundant pair). See *Time Standard Table Description* on page 204.

Changes made to the Time Standard table do not take effect until you reboot the CM.

Set Time Code Information

Time code is used for short-term, frame-accurate switching. Since NTSC video signals run at 29.97 frames per second, drop- frame time code accumulates an error of 2.2610 frames per day. This amounts to +75.442 milliseconds of drift every 24 hours, a discrepancy larger than two seconds every month.

AccuSwitch tracks two time lines, SMPTE time code and an internal real-time clock (RTC). The preferred time source is house SMPTE time code. When a valid time code is not present, the real-time clock will use the Simple Network Time Protocol (SNTP) to synchronize with the specified sources in the following order:

1) TCR (Time Code Reader) Host

2) NTP (Network Time Protocol) Host

3) RTC (Real-Time Clock) Host

For example, if the SMPTE time code source were to fail the CM-4400would attempt switch to the SNTP source; if that source was not available then the CM-4400hardware clock would be used, etc.

The real-time clock (RTC) is used to accurately track time long term. This clock is synchronized with other sources based on the entries in the Time Standard table. The real-time clock's hours, minutes, and seconds will be synchronized to this time code if the time code is present. If time code is not present, the SMPTE time line will be synchronized with the real-time clock (the real-time clock is a backup time line).

AccuSwitch will inhibit adjustments to the SMPTE time line when the system is under a load. The time line will only be adjusted when nothing is happening. The CM-4400 will be synchronized with another CM-4400 connected to a time code reader. This would keep the time within a few milliseconds of time code.

The system will synchronize with a designated Network Time Protocol (NTP) server if the Time Code Reader (TCR) host does not respond. If there is an error with the house time code, all of the CM-4400s could stay synchronized with a designated time server. The Time server may be synchronized to an accurate national standard.

Finally, if the first two hosts do not respond, a CM-4400 could be selected as the master and all CM-4400s synchronized to it. While this would still allow time to drift it would force all CM-4400s to drift together.

In the final analysis, each time host is just an IP address and the CM-4400 will attempt to synchronize with each one in the priority specified. Any valid IP address can be placed in each of the fields or each can be left empty (no synchronization).

Time Standard Table Description

Figure 162. Time Standard Table Example

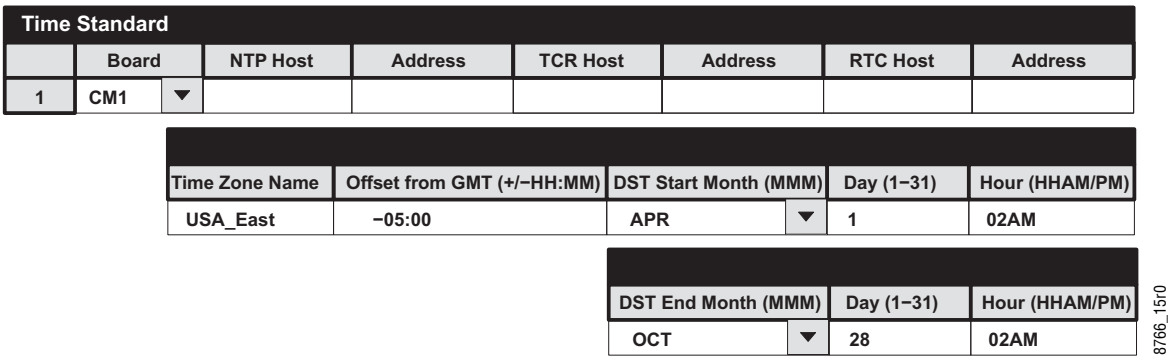

Board: Select the name of the CM-4400 board as entered on the Network Description table.

NTP Host / Address: Create a host name (if one is preferred) if a Network Time Protocol host computer will be used to supply time information (or used as a backup source). As a minimum the IP address of the NTP host must be entered.

TCR Host / Address: if there is more than one CM-4400 in the system where one CM-4400 is connected to a time source and acts as a "Time Code Reader" host for the other. If this is the case, enter the name of the host CM-4400 as found on the Network Description table. Enter the IP address of the host CM-4400 (the IP address can be determined using the JNS Board Status menu).

RTC Host / Address: Create the host name and enter the IP address if a Real Time Clock host computer will be used to supply time information.

Time Zone Name: Create a description of the local time zone. The field will accept any text that is a maximum of eight characters.

Offset from GMT: (required) Enter the hours and minutes offset from the Greenwich Mean Time (Coordinated Universal Time or "UTC").

Time zones west of Greenwich require a minus entry; time zones east of Greenwich require a plus entry. For example, New York City would be -05:00. The offset from GMT must be supplied so that the correct time is displayed. Time in the CM-4400 is always kept in UTC2 internally. When time is displayed, it is shifted according the offset for the local time zone.

DST Start Month / Day / Hour: (required) Enter the Daylight Savings start date and time in the respective fields.

DST End Month / Day / Hour: (required) Enter the Daylight Savings stop date and time in the respective fields.

Note If you don't wish to use Daylight Savings, enter the same month, date, and time for Start and Stop.

Use Numeric Sets for Quick Switcher Checkout

The factory-supplied numeric configuration sets can be used to set up and operate the routing switcher in the minimum possible time. The "NUMERIC" set provides for a switcher with up to 256 inputs, 256 outputs, and four levels; the "NUM-64" set provides for 64 inputs and outputs; and the "NUM-128" set provides for 128 inputs/outputs.

The numeric sets are complete and ready to download, except for entry of at least one CM-4400 Control Chassis address, entry of the actual switcher Physical Levels and Driver types, and one switcher control panel address.

Use the "File > Open" menu to select one of the Numeric sets and make a copy (See *Copy Configuration Set* on page 132.) Select Jupiter > Network Description table and change the CM-4400 address to match those in your system. The actual switcher Physical Levels and Driver types are entered

on the *Switcher Level Descriptions* on page 157. The control panel address must be entered on the MPK Devices Description table (*MPK Devices Table* on page 190).

The set can then be compiled and activated as described in *Validate, Compile, and Activate (Downloading) Configuration Set* on page 135.

Video Reference Table

The Video Reference table is used only for configuring a CM-4000, or 4400, System Controller that is running the AccuSwitch software.

Figure 163. Video Reference Table

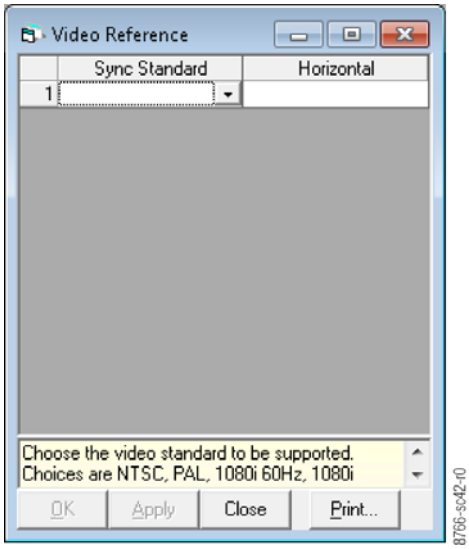

Follow these steps to configure the Video Reference table:

1. Choose the preferred video standard from the Sync Standard drop-down list.
   - Choices are: NTSC, PAL, 1080i 60Hz, 1080i 50Hz, and 1080i 59.94Hz.
2. Select the switch point in the video frame from the Horizontal drop-down list.

   Choices are:
   - NTSC choices are 9.5, 10, 10.5, 11, 11.5, 12, 12.5, and 13. The [default and] SMPTE recommended setting is 10.5.
   - PAL choices are 5.5, 6, 6.5, 7, 7.5, 8, and 8.5. The [default and SMPTE] recommended setting is 6.5.

Point-to-Point Switching

Point-to-point switching insures that a source can be switched to only one destination at a time. In the example below (Figure 164), VCR 1 is the only destination that is receiving data from the editor. The transmit data from an editor can only be switched to one VCR at a time.

Figure 164. Point-to-Point Switching Example

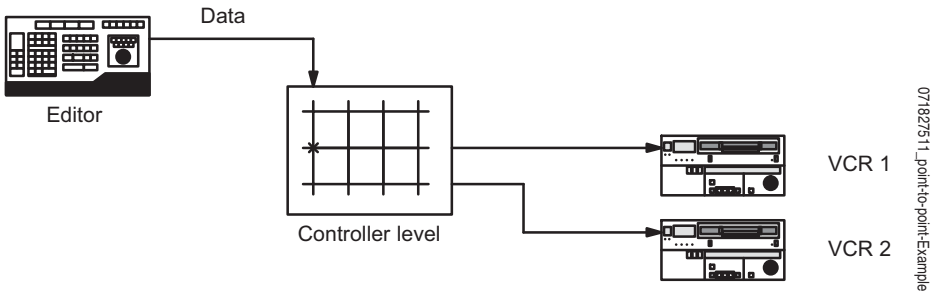

Jupiter AccuSwitch supports the following router options support point-to-point switching:

- Advise
- Enforce

A safe input must be configured for point-to-point switching to occur.

Switching Router Options

The router options are:

Enforce: When the Enforce option is selected or turned on, the software will automatically switch the previous destination to the SAFE input. The control device would then be switched to a new destination.

Advise: When the Advise flag option is on and an attempt is made to switch control to a new device, the switch will not occur. The system will display the following message on the control panel in two lines if the selected source is used by another destination:

```
SRC in use
by: <Destination name>
```

The switch to a new device will not be executed until the destination that is using the source is either:

- Switched to a different source.
- Switched to the SAFE input.

This option will avoid having the control device connected to two machines at the same time.

Note The Advise and Enforce options do not work when you are using Sequences or Multiple-destination switching when the same source is being routed to more than one destination.

SAFE input

A SAFE input must be defined before a destination can be cleared. This input is defined by entering the word “safe” in all caps and adding two (2) spaces at the end of the word, in the Switcher Input table (Figure 165). For example:

```
"SAFE      "
```

Figure 165. “SAFE “ in the Switcher Input Table

Switcher Input – MAINROUT					
	Logical Input Name	VIDEO	LEFT	RIGHT	TC
1	SAFE				000I
2	TONE	064I	000P	000P	000I
3	TC				000P
4	VT01	001	001	001	001

Remote System Routing

WAN operation of multiple Jupiter systems or Remote System routing has been supported since the 7.4.1 release of Jupiter. Remote System routing allows multiple Jupiter networks, with multiple routers, to be controlled bi–directionally. See Figure 166 below.

Figure 166. Remote System Routing Example

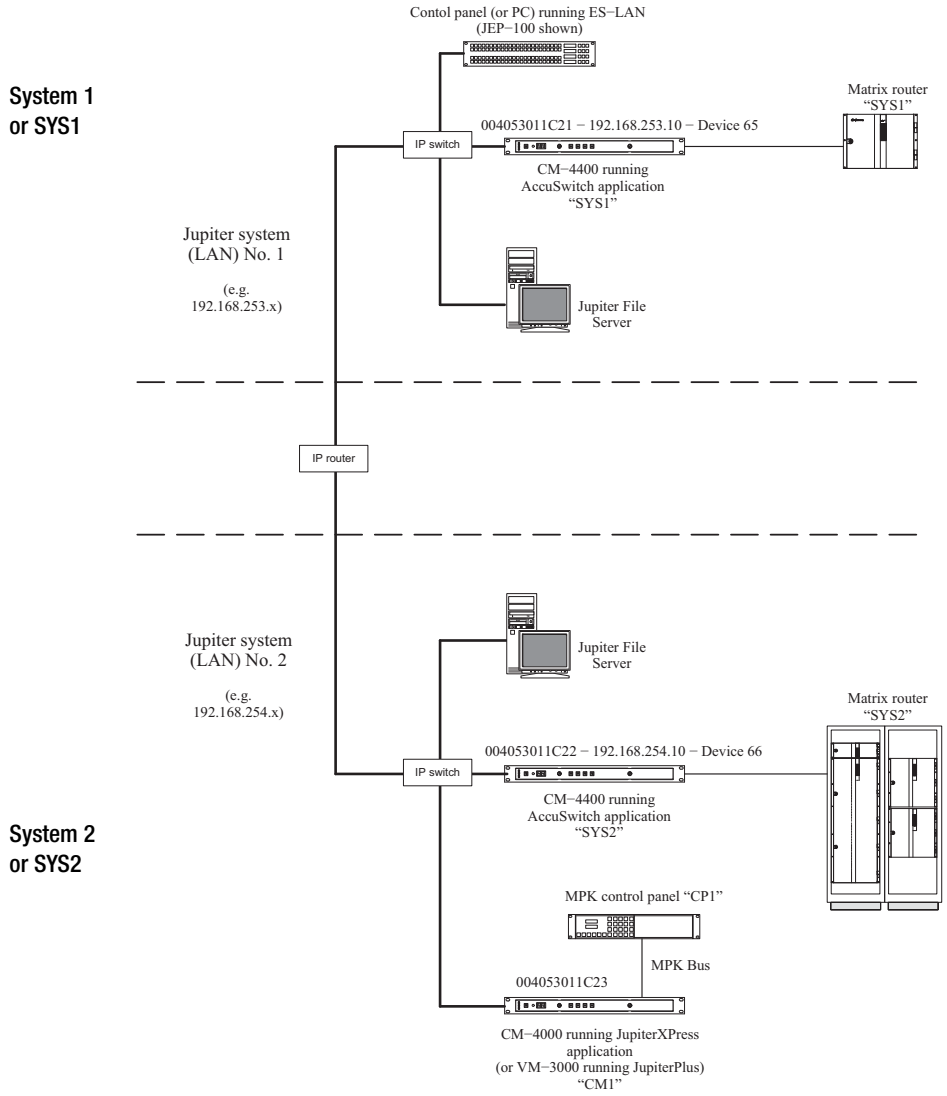

Notice that each AccuSwitch Controller will have only one IP address. A CM-4000 in system1 will have only one name. A CM-4000 in system 1 could have a different name when it is identified in system 2.

Remote System Routing Characteristics

Remote System routing has several notable characteristics:

- Each Jupiter system can include one or more matrix routers.
- Each Jupiter system must include a Jupiter file server.
- Any control panel can control any matrix router.
- The status of all of the matrix routers can be shown on all control panels.
- Each Jupiter system must include at least one AccuSwitch CM–4000.
- AccuSwitch does not support MPK control panels. If MPK devices are required, they must be connected to a separate CM-4000 running Jupiter XPress or a VM–3000 running Jupiter Plus.
- Multiple Jupiter systems can be connected through IP routers.
- Each system must be configured to recognize the other(s). This must be done using each system's file server (as described below).

AccuSwitch Software Configuration

Each system must be configured to recognize the other systems. The following instructions assume you are familiar with standard Jupiter configuration rules.

The following tables will need to be modified:

- Network Description tables
- Switcher Description tables
- CP Level Set tables
- MPK Devices tables
- Switcher Input Tables – both servers
- CP Input Sets – both servers
- Switcher Output Tables – both servers
- CP Output Sets – both servers

Detailed instruction for modifying these tables is provided in the sections below.

Network Description Tables

The following examples correspond to the two systems that are shown in Figure 166 on page 209.

The Network Description table for System 1 (which is shown in the top half of Figure 166) is shown in Figure 167. The Network Description table for System 2 (which is shown in the bottom half of Figure 166 on page 209) is shown in Figure 168 on page 212.

Note Connection to the Internet through a firewall is not supported.

System 1 Server – Network Description Table

Figure 167. Example of the Network Description Table on the System 1 Server

Network Description

	Board Name	Type	Address	Redundant Address
1	SYS1	AS	004053011C21	
2	SYS2	ES	192.168.254.10	
3				

Network Description

	Board Name	Type	Address	Redundant Address
1	SYS1	AS	004053011C21	
2	SYS2	NO	192.168.254.10	
3				

8766-sc66-r1

Follow these steps to modify the Network Description table for System 1 (SYS1):

1. Enter a name for System 1's CM-4000 in the Board Name field. SYS1 is used in the example above.
2. Select the AS option from the Type drop-down list.
3. Enter the CM-4000's hardware address in the Address column.

Follow these steps to enter the System 2 (SYS2) information on the Network Description table for System 1:

1. Enter a name for System 2's CM-4000 in the Board Name field. SYS2 is used in Figure 167 on page 211 .
2. Select the ES option from the Type drop-down list.
3. Enter the IP address for SYS2's CM-4000 instead of the hardware address in the Address field.

System 2 Server – Network Description Table

The Network Description table on the server in System 2 has entries for the two local CMs and an entry for the SYS1 CM (Figure 168). The IP address for the SYS1 system has ES (ES–LAN) in the Type field and has IP address (192.168.253.10) entered in the Address field.

Figure 168. Example of the Network Description Table on the System 2 Server

Network Description				
	Board Name	Type	Address	Redundant Address
1	SYS2	AS	004053011C22	
2	CM1	SB	004053011C23	
3	SYS1	ES	192.168.253.10	

i7512_Network Description table_Sy

Follow these steps to modify the Network Description table on the System 2 Server:

1. Enter a name for System 2's CM-4000 in the Board Name field. SYS2 is used in the example above.
2. Select the AS option from the Type drop-down list for SYS 2.
3. Enter the CM-4000's hardware address in the Address column.
4. Enter the information for the second local CM-4000, change the information as necessary.
5. Enter the name for System 1's CM-4000 in the Board Name field. SYS1 is used in Figure 168 .
6. Select the ES option from the Type drop-down list.
7. Enter the IP address for SYS1's CM-4000 instead of the hardware address in the Address field.

Switcher Description Tables

The Switcher Description tables must describe all the available routers, with the CP Level Set tables used as mapping devices between the systems. In the example shown here, both matrix router SYS1 and matrix router SYS2 have a video level assigned in hardware as physical level 1 and audio levels as 2 (Left) and 6 (Right).

SYS1 Switcher Description Table

The Switcher Description table on the System 1 server is shown in Figure 169.

Figure 169. Example of the Switcher Description Table on the System 1 Server

Rows 1 through 3 describe SYS1

Rows 4 through 6 describe SYS2

Switcher Description

	Switcher	Level	VI	RV	MC	Board	#In	#Out	PLvL	Follow Level	Driver	Option 1	Option 2	Data Options	Audio	DM 400 Off Time
1	SYS1	VIDEO	☑	☐	☑	SYS1	64	64	1		Binary				None	
2	SYS1	LEFT	☐	☐	☐	SYS1	64	64	2		Binary				Left	
3	SYS1	RIGHT	☐	☐	☐	SYS1	64	64	6		Binary				Right	
4	SYS2	VIDEO	☐	☐	☐	SYS1	64	64	100		ES_LAN	66			None	
5	SYS2	LEFT	☐	☐	☐	SYS1	64	64	101		ES_LAN	66			None	
6	SYS2	RIGHT	☐	☐	☐	SYS1	64	64	102		ES_LAN	66			None	

Switcher Description

	Switcher	Level	VI	RV	MC	Board	#In	#Out	PLvL	Follow Level	Driver	Option 1	Option 2	Data Options	Audio	DM 400 Off Time
1	SYS1	VIDEO	☑	☐	☑	SYS1	64	64	1		Binary				None	
2	SYS1	LEFT	☐	☐	☐	SYS1	64	64	2		Binary				Left	
3	SYS1	RIGHT	☐	☐	☐	SYS1	64	64	6		Binary				Right	
4	SYS2	VIDEO	☐	☐	☐	SYS1	64	64	100		NP_LAN	66			None	
5	SYS2	LEFT	☐	☐	☐	SYS1	64	64	101		NP_LAN	66			None	
6	SYS2	RIGHT	☐	☐	☐	SYS1	64	64	102		NP_LAN	66			None	

8766-sd5-r1

In Figure 169, rows 1 through 3 describe SYS1 or “the local” matrix router. Rows 4 through 6 describe the matrix router on SYS2 or the “remote” Jupiter system.

The Switcher column name must match the correct ES type entry in the Board column from the Network description table if the Driver column entry is ES_LAN.

For this example, the Board name selection should be SYS1 and the Switcher name for the ES_LAN driver levels should be SYS2.

This applies to Figure 170 as well.

Figure 170. The Switcher Column and Board Column Can be Different

Switcher Description

	Switcher	Level	VI	RV	MC	Board	#In	#Out	PLvL	Follow Level	Driver	Option 1	Option 2	Data Options	Audio	DM 400 Off Time
1	SYS1	VIDEO	☑	☐	☑	SYS1	64	64	1		Binary				None	
2	SYS1	LEFT	☐	☐	☐	SYS1	64	64	2		Binary				Left	
3	SYS1	RIGHT	☐	☐	☐	SYS1	64	64	6		Binary				Right	
4	SYS2	VIDEO	☐	☐	☐	SYS1	64	64	100		ES_LAN	66			None	
5	SYS2	LEFT	☐	☐	☐	SYS1	64	64	101		ES_LAN	66			None	
6	SYS2	RIGHT	☐	☐	☐	SYS1	64	64	102		ES_LAN	66			None	

The switcher will use the ES (ES-LAN Protocol) selection in the Type column of the Network Description table.

While the physical level (PLvL) for the SYS2’s LEFT setting is actually “1"; the number ”1” cannot be entered in the PLvL field because it is already being used in row 1. Instead, a modulo “100” offset is used. For Left, the entry is 101 (Figure 171).
For Example, when the Left level setting “101” is divided by 100 the remainder is the index number “1.” This Index ”1” points to the second row of System 2’s CP Level Set (Figure 175 on page 215). However, this offset is only is only required for levels on the same board that have the same address.

Figure 171. Example of a Modulo "100" Index

Switcher Description

	Switcher	Level	VI	RV	MC	Board	#In	#Out	PLvL	Follow Level	Driver	Option 1	Option 2	Data Options	Audio	DM 400 Off Time
1	SYS1	VIDEO	☑	☐	☑	SYS1	64	64	1		Binary				None	
2	SYS1	LEFT	☐	☐	☐	SYS1	64	64	2		Binary				Left	
3	SYS1	RIGHT	☐	☐	☐	SYS1	64	64	6		Binary				Right	
4	SYS2	VIDEO	☐	☐	☐	SYS1	64	64	100		ES_LAN	66			None	
5	SYS2	LEFT	☐	☐	☐	SYS1	64	64	101		ES_LAN	66			None	
6	SYS2	RIGHT	☐	☐	☐	SYS1	64	64	102		ES_LAN	66			None	

100Mod100 = 0
101Mod100 = 1
102Mod100 = 2

Refer to the CP Level Set Table (Figure 175 on page 215).

The address field for the system 1 device is entered in the Option 1 column.

Figure 172. The Option 1 Column

Switcher Description

	Switcher	Level	VI	RV	MC	Board	#In	#Out	PLvL	Follow Level	Driver	Option 1	Option 2	Data Options	Audio	DM 400 Off Time
1	SYS1	VIDEO	☑	☐	☑	SYS1	64	64	1		Binary				None	
2	SYS1	LEFT	☐	☐	☐	SYS1	64	64	2		Binary				Left	
3	SYS1	RIGHT	☐	☐	☐	SYS1	64	64	6		Binary				Right	
4	SYS2	VIDEO	☐	☐	☐	SYS1	64	64	100		ES_LAN	66			None	
5	SYS2	LEFT	☐	☐	☐	SYS1	64	64	101		ES_LAN	66			None	
6	SYS2	RIGHT	☐	☐	☐	SYS1	64	64	102		ES_LAN	66			None	

This Address is from the MPK Devices table of System 2.

For more information see *MPK Devices Tables* on page 215.

SYS2 Switcher Description Table

Figure 173 on page 214 shows the Switcher Description table for System 2. This table is similar to the Switcher Description table for System 1: the top three rows define the local router (in this case, SYS2); the bottom three rows define the remote router (SYS1).

Figure 173. Example of the Switcher Description Table on the System 2 Server

Switcher Description

	Switcher	Level	VI	RV	MC	Board	#In	#Out	PLvL	Follow Level	Driver	Option 1	Option 2	Data Options	Audio	D Of
1	SYS2	VIDEO	☑	☐	☑	SYS2	64	64	1		Binary				None	
2	SYS2	LEFT	☐	☐	☐	SYS2	64	64	2		Binary				Left	
3	SYS2	RIGHT	☐	☐	☐	SYS2	64	64	6		Binary				Right	
4	SYS1	VIDEO	☐	☐	☐	SYS2	64	64	100		ES_LAN	65			None	
5	SYS1	LEFT	☐	☐	☐	SYS2	64	64	101		ES_LAN	65			None	
6	SYS1	RIGHT	☐	☐	☐	SYS2	64	64	102		ES_LAN	65			None	

Level Name "VIDEO(SYS2)" from Sys 2 CP Level Set (Figure 175 on page 215) maps to local Physical Level 1

CP Level Set Tables

The CP Level sets that are assigned to the WAN CM (on the *MPK Devices Tables*, which is explained on page 215) must be created as type CP–3000."

Figure 174 shows the CP Level Set for SYS1 (System 1).

Figure 174. Example of the CP Level Set on the System 1 Server

CP Level Set — KXYZ–LVL

	Mnemonic	Level	Break	Switch
1	VIDEO	VIDEO(SYS1)	☑	☑
2	LEFT	LEFT(SYS1)	☑	☑
3	RIGHT	RIGHT(SYS1)	☑	☑
4			☐	☐

071827512_CP Level Set_System 1

Figure 175 shows the CP Level Set on the SYS2 (System 2) server.

Figure 175. Example of the CP Level Set on the System 2 Server

Index number "1" from System 1's Switcher Description table (Figure 171 on page 214) maps to the second row

CP Level Set — KXYZ–LVL

	Mnemonic	Level	Break	Switch
1	VIDEO	VIDEO(SYS2)	☑	☑
2	LEFT	LEFT(SYS2)	☑	☑
3	RIGHT	RIGHT(SYS2)	☑	☑
4			☐	☐

071827512_CP Level Set_System 2

Maps to the local Switcher Description table (Figure 173 on page 214)

In the example above:

- The PLvl number "100" on the System 1's (SYS1) Switcher Description table (Figure 171 on page 214) converts to modulo "0," which in turn points to row 1 in Figure 175 above.
- This index number identifies the name of the target Level, which is VIDEO(SYS2) in the example above.
- This name in the level column points to the corresponding Level name on System 2's Switcher Description table (Figure 173 on page 214).

MPK Devices Tables

Although the CM is not an MPK device as such, the MPK table is used to assign the CM with an Address that can be used by a remote system.

Follow these steps to add the Remote Routing information:

1. Enter a name for the SYS1 CM in the MPK Devices field. The name entered for the CM is arbitrary; however, the name should identify the local system.

2. Select the ES–RMTR option from the drop-down list in the Device Type field.
3. Select the name for the CM from the drop-down list in the Board column. This Board entry is the name that was entered in the Network Devices table (see Figure 167 on page 211).
4. Enter a two–digit ES-LAN Device number that is from 65 to 75 in the Address column. This number must then be entered in the Option 1 column of the Switcher Description tables that describe levels connected to this CM.

Note Numbers 1-64 in the Address column are reserved for panel IDs.

For example, Figure 176 shows the MPK table that resides on System 1's server.

- The SYS1's CM-4000 address has been set to "65." This address has been selected on the Option 1 column of the SYS2 Switcher Description table (Figure 173 on page 214).

Figure 176. Example of the MPK table on the System 1 Server

MPK Devices

	MPK Devices	Device Type	Expansion	Pass word	Board	Port	Address	Input Sets	In Panel	Output Sets	Out Panel	Level Set	Overide Set	Sequence Set
1	JEP1	ES–LAN	☐		SYS1		01	KXYZ–INP		KXYZ–OUT		KXYZ–LEV		
2	[illegible]1	ES–RMTR	☐		SYS1		6[illegible]	KXYZ–INP		KXYZ–OUT		KXYZ–LEV		

Enter a name for the SYS1 CM

Select the ES–RMTR option

Select the name for the CM

Enter a two–digit number

5. Follow the steps above to enter the information in the MPK for SYS2.

Figure 177 shows the MPK table on the SYS2 (System 2) server.

Figure 177. Example of the MPK table on the System 2 Server

MPK Devices

	MPK Devices	Device Type	Expansion	Pass word	Board	Port	Address	Input Sets	In Panel	Output Sets	Out Panel	Level Set	Overide Set	Sequence Set
1	S2	ES–RMTR	☐		SYS2		66	KXYZ–INP		KXYZ–OUT		KXYZ–LEV		
2	CP1	CP–3000	☐		SYS2	1	00000014	KXYZ–INP		KXYZ–OUT		KXYZ–LEV		

Switcher Input Tables – SYS1 Server

The Switcher Input tables are used to assign a logical name to each switcher input. In the examples below, there is a table for the local router on SYS1 (Figure 178) and another table for the remote router SYS2 (Figure 179).

Note The Logical Input Names must be unique across these tables.

Entries on the Switcher SYS1 Input table (Figure 178) are physical input numbers. Only local input names are entered.

Figure 178. Example of the Switcher SYS1 Input table on the System 1 Server

Switcher Input – SYS1				
	Logical Input Name	VIDEO	LEFT	RIGHT
1	1BARS	000	000	000
2	1VT1	001	001	001
3	1VT2	002	002	002
4	1VT3	003	003	003

071827512_Switcher Input Tables – SYS1

Figure 179 shows the Switcher SYS2 Input table on System 1 server (example). Entries in this table are the "entry" numbers that are used in the CP-Input table and are used by the ES-RMTR device in the MPK table for the remote system configuration. Only remote input names are entered.

Figure 179. Example of the Switcher SYS2 Input table on the System 1 Server

From the Logical Input field on the CP Input Set table for System 1

Switcher Input – SYS2				
	Logical Input Name	VIDEO	LEFT	RIGHT
1	2BARS	000	[illegible]	[illegible]
2	2VT4	001	001	001
3	2VT5	002	002	002
4	2VT6	003	003	003

071827512_Switcher Input Tables – SYS2

This information provides the information for the fields in the Entry column for the Serial–type CP Input Set on System 2

The serial-type CP Input set as described below.

CP Input Sets – SYS1 Server

In this example the CP Input Set in Figure 181 is assigned via the MPK Devices table. The serial–type CP Input set only contains local input names. This table is used by the ES-RMTR device in the SYS1 MKP devices table for switch commands originating from SYS2.

Figure 181 also shows the begin point of an example switching sequence. It may be helpful to study this example sequence to see how a control panel command reaches the desired router.

Figure 180. Example of the CP Input Set table on the System 1 Server

Input Set — KXYZ–INP					
	Category	Entry	Mnemonic	Logical Input	
1	Test	1	1BARS	1BARS	
2	Test	2	2BARS	2BARS	
3	VTR	1	1VT1	1VT1	
4	VTR	2	1VT2	1VT2	
5	VTR	3	1VT3	1VT3	
6	VTR	4	2VT4	2VT4	
7	VTR	5	2VT5	2VT5	
8	VTR	6	2VT6	2VT6	

This information provides the information for the fields in the Logical Input Name column for the Switcher SYS2 Input table

0711827512_CP Input Sets – SYS1

Only local input names are selected in the Serial-type CP Input Set table on the System 1 Server (Figure 181).

Figure 181. Example of the Serial–type CP Input Set table on the System 1 Server

Input Set — SYS1INP (SERIAL)		
	Entry	Logical Input
1	0	1BARS
2	1	1VT1
3	2	1VT2
4	3	1VT3

0711827512_Example of Serial - typeCP Input S

Switcher Input Tables – SYS2 Server

These example tables have been arranged so that control between the two systems is bi–directional.

Entries on the Switcher SYS1 Input table on System 2 server are the Entry numbers used in the serial-type CP-Input table on System 1 (not physical input numbers) (Figure 182). Only remote input names are entered on this table.

Figure 182. Example of the Switcher SYS1 Input table on the System 1 Server

Switcher Input – SYS1				
	Logical Input Name	VIDEO	LEFT	RIGHT
1	1BARS	000	000	000
2	1VT1	001	001	001
3	1VT2	002	002	002
4	1VT3	003	003	003

0718827512_Switcher Input Tables – SYS1

Entries on the Switcher SYS2 Input table on System 2 server are physical input numbers. Only local input names are entered.

Figure 183. Example of the Switcher SYS2 Input table on the System 2 Server

From the Serial–type CP Input Set on the System 2 server

Switcher Input – SYS2

	Logical Input Name	VIDEO	LEFT	RIGHT
1	2BARS	000	000	000
2	2VT4	001	001	001
3	2VT5	002	002	002
4	2VT6	003	003	003

Switch command to router: "Select physical input 000." (END of example sequence)

07182751 2_Switcher SYS2 Input table

CP Input Sets – SYS2 Server

The inclusion of inputs to both systems allows bi-directional control.

Figure 184. Example of the CP Input Set table on the System 2 Server

Input Set — KXYZ–INP

	Category	Entry	Mnemonic	Logical Input
1	Test	1	1BARS	1BARS
2	Test	2	2BARS	2BARS
3	VTR	1	1VT1	1VT1
4	VTR	2	1VT2	1VT2
5	VTR	3	1VT3	1VT3
6	VTR	4	2VT4	2VT4
7	VTR	5	2VT5	2VT5
8	VTR	6	2VT6	2VT6

07182751 2_CP Input Set table

Only local input names are entered on the Serial–type CP Input Set on the System 2's server.

Figure 185. Example of the Serial–type CP Input Set on the System 2 Server

From the fields on the Video column of the Switcher SYS2 Input table

Input Set — SYS2INP (SERIAL)

	Entry	Logical Input
1	0	2BARS
2	1	2VT4
3	2	2VT5
4	3	2VT6

This entry provides the information for the fields in the Logical Input Name column for the Switcher SYS2 Input table on the System 2 server

07182751 2_Serial–type CP Input

Switcher Output Tables – SYS1 Server

The Switcher Output tables follow the pattern that was described for the Switcher Input tables.

Each server has the customary Switcher Output table and CP Output set. In addition, each server has a special indexing Switcher Output table and a special Serial–type CP Output set. See the example tables below.

Figure 186. Example of the SYS1 Switcher Output Table on the System 1 Server

Switcher Output – SYS1

	Logical Output Name	Security	S–T		Pass word	VIDEO	LEFT	RIGHT
1	1QCMON		–	▼		000	000	000
2	1VT1		–	▼		001	001	001
3	1VT2		–	▼		002	002	002
4	1VT3		–	▼		003	003	003

18275 12_SYS1 Switcher Output Table_SYS1

Entries on the SYS1 Switcher Output table are physical output numbers. Only local outputs are entered on this table.

Figure 187. Example of the SYS2 Switcher Output table on the System 1 Server

From the fields on the Logical Output column of the CP Output Set table on System 1 server table

Switcher Output – SYS2

	Logical Output Name	Security	S–T		Pass word	VIDEO	LEFT	RIGHT
1	2QCMON		–	▼		000	[illegible]	[illegible]
2	2VT3		–	▼		001	001	001
3	2VT4		–	▼		002	002	002
4	2VT5		–	▼		003	003	003

71827512_Switch Output table_SYS2

This entry provides the information for the fields in the Serial–type CP Output Set table on System 2 server

Entries on the SYS2 Switcher Output table are index numbers (not physical output numbers). Only remote outputs are entered on this table.

CP Output Sets – SYS1 Server

Figure 188. Example of the CP Output Set Table on the System 1 Server

Output Set — KXYZ–OUT

	Category		Entry	Auto Mnem	Mnemnonic	Logical Output		Level Set		Button
1	MON	▼	1	☑	1QCMON	1QCMON	▼		▼	
2	MON	▼	2	☑	2QCMON	2QCMON	▼		▼	
3	VTR	▼	1	☑	1VT1	1VT1	▼		▼	
4	VTR	▼	3	☑	2VT3	2VT3	▼		▼	

07182 7512_CP Output sets – SYS1 Server

This entry provides the information for the Logical Output Name column fields in the SYS Switcher Output table o System 1 server

The inclusion of outputs to both systems the CP Output Set allows bi–directional control (by excluding the outputs, you can restrict control).

Figure 189. Example of the SYS2 Switcher Output table on the System 1 Server

Output Set – SYS1OUT (SERIAL)

	Entry	Logical Output	
1	0	1QCMON	▼
2	1	1VT1	▼
3	2	1VT2	▼
4	3	1VT3	▼

512_Serial–type CP Output Set table_SY

Only local input names are entered on the Serial- type CP Output Set table.

Switcher Output Tables – SYS2 Server

Entries on the SYS1 Switcher Output table are index numbers (not physical input numbers). Only remote outputs are entered on this table.

Figure 190. Example of the SYS1 Switcher Output Table on the System 2 Server

Switcher Output – SYS1

	Logical Output Name	Security	S–T	Pass word	VIDEO	LEFT	RIGHT
1	1QCMON		–		000	000	000
2	1VT1		–		001	001	001
3	1VT2		–		002	002	002
4	1VT3		–		003	003	003

827512_CP Output Set table_System 2 s

Entries on SYS2 Switcher Output table are physical output numbers. Only local outputs are entered on this table.

Figure 191. Example of the SYS2 Switcher Output Table on the System 2 Server

From the fields on the Logical Output column of the CP Output Set table on System 2 server table

Switcher Output – SYS2

	Logical Output Name	Security	S–T	Pass word	VIDEO	LEFT	RIGHT
1	2QCMON		–		000	[illegible]	[illegible]
2	2VT3		–		001	001	001
3	2VT4		–		002	002	002
4	2VT5		–		003	003	003

827512_Serial–type CP Output Set table_S

Switch command to router: “Select physical output 000” (END of example sequence)

CP Output Sets – SYS2 Server

The inclusion of outputs to both systems in the CP Output Set table on the System 2’s server allows bi-directional control (by excluding the outputs, you can restrict control).

Figure 192. Example of the CP Output Set Table on the System 2 Server

Output Set — KXYZ–OUT

	Category	Entry	Auto Mnem	Mnemnonic	Logical Output	Level Set	Button
1	MON	1	☑	1QCMON	1QCMON		
2	MON	2	☑	2QCMON	2QCMON		
3	VTR	1	☑	1VT1	1VT1		
4	VTR	3	☑	2VT3	2VT3		

I8275_CP Output Set table_System 2 sen

Only local outputs are entered on this table

Figure 193. Example of the Serial-type CP Output Set Table on the System 2 Server

From the fields on the Logical Output column of the CP Output Set table on System 2 server table

Output Set – SYS2OUT (SERIAL)

	Entry	Logical Output
1	0	2QCMON
2	1	2VT3
3	2	2VT4
4	3	2VT5

827512_Serial–type CP Output Set table_

This entry provides the information for the Logical Output Name column fields in the SYS2 Switcher Output table on System 2 server.

Path Finding

Path finding is supported for WAN applications. However, when configuring the Path finding tables, the entries in the Physical Output and Physical Input columns are not the actual physical input and output numbers (i.e., they are not the physical" numbers shown in the Switcher Input and

Output tables). Instead, the Path finding tables use the Entry numbers from the CP Input and CP Output set tables assigned to the CM that is controlling the target matrix router.

Section 6

Board Status – JNS Tools

Overview

The Board Status application displays (Figure 194) the current status and information for each CM-4400 (board) as they appear in the Network Description table. It can be used to ensure that all system controllers are using compatible software, user-created configuration sets, and that enough free memory is available for the system to operate properly.

Most of this information also appears in the *Jupiter Control Center* on page 227.

Figure 194. Board Status Application

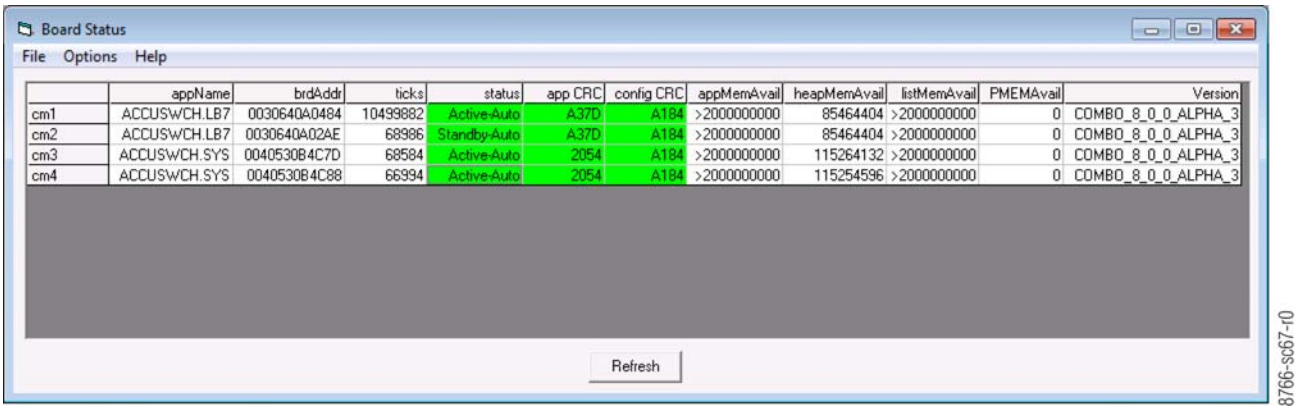

	appName	brdAddr	ticks	status	app CRC	config CRC	appMemAvail	heapMemAvail	listMemAvail	PMEMAvail	Version
cm1	ACCUSWCH.LB7	0030640A0484	10499882	Active-Auto	A37D	A184	>2000000000	85464404	>2000000000	0	COMBO_8_0_0_ALPHA_3
cm2	ACCUSWCH.LB7	0030640A02AE	68986	Standby-Auto	A37D	A184	>2000000000	85464404	>2000000000	0	COMBO_8_0_0_ALPHA_3
cm3	ACCUSWCH.SYS	0040530B4C7D	68584	Active-Auto	2054	A184	>2000000000	115264132	>2000000000	0	COMBO_8_0_0_ALPHA_3
cm4	ACCUSWCH.SYS	0040530B4C88	66994	Active-Auto	2054	A184	>2000000000	115254596	>2000000000	0	COMBO_8_0_0_ALPHA_3

Menus

Each menu and the available options are explained below.

File

Exit: Closes the Board Status application.

Options

Alarm Enabled: This menu option enables or disables an audible alarm. If a board is inactive, or if its code or configuration CRCs do not match the file server's active set, the application will beep if the alarm is enabled.

Help

About: This menu option displays the application's About box with version information.

Table Description

Each column in the Board Status table (Figure 195) is explained below. The Board Status table can only show Control Modules (CM) information, PC information is not an option.

Figure 195. Board Status Application

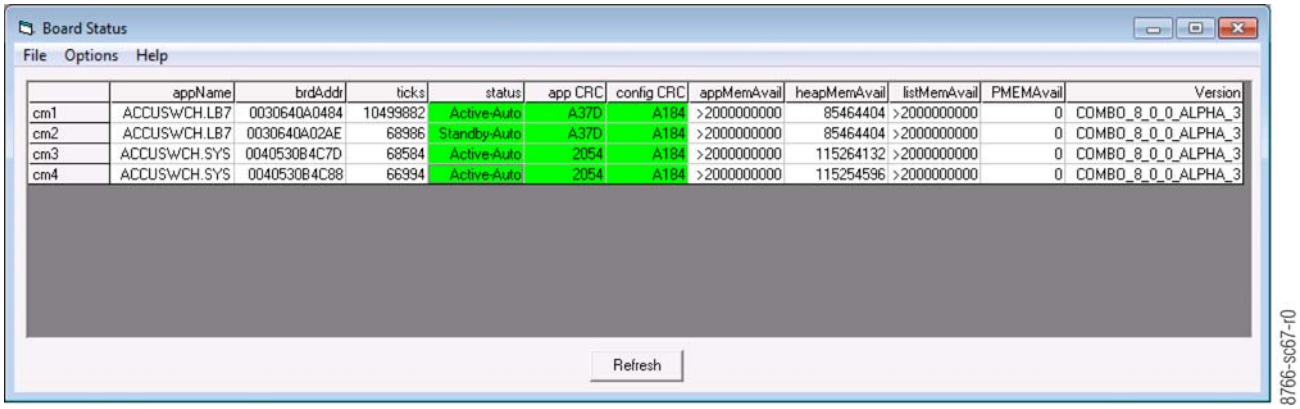

	appName	brdAddr	ticks	status	app CRC	config CRC	appMemAvail	heapMemAvail	listMemAvail	PMEMAvail	Version
cm1	ACCUSWCH.LB7	0030640A0484	10499882	Active-Auto	A37D	A184	>2000000000	85464404	>2000000000	0	COMBO_8_0_0_ALPHA_3
cm2	ACCUSWCH.LB7	0030640A02AE	68986	Standby-Auto	A37D	A184	>2000000000	85464404	>2000000000	0	COMBO_8_0_0_ALPHA_3
cm3	ACCUSWCH.SYS	0040530B4C7D	68584	Active-Auto	2054	A184	>2000000000	115264132	>2000000000	0	COMBO_8_0_0_ALPHA_3
cm4	ACCUSWCH.SYS	0040530B4C88	66994	Active-Auto	2054	A184	>2000000000	115254596	>2000000000	0	COMBO_8_0_0_ALPHA_3

First column: This unnamed column lists the board names in the order that they appear in the Network Description table.

appName column: This column shows the name of the board's operating system code file. This file is found in the Jupiter active directory (C:\Program Files\Thomson\Jupiter\active) and is downloaded to the board if the file changes or you clear the flash on the board.

brdAddr column: This column shows the Ethernet hardware address for the board.

Ticks column: This column shows an approximate indication of the board's up time or ticks. There are approximately 60 ticks/second for NTSC and approximately 50 ticks/second for PAL.

Status column: This column shows the current status of the boards that are listed in the first column. The field will be green if the board is active and red if the board is inactive.

The fifth and sixth columns show the cyclic redundancy check (CRC) for the board's application and configuration files. If these match what the file server has for the active set, the fields will be green. Otherwise, the fields are red-indicating the need for a fresh download to all boards.

The "...MemAvail" fields show how much memory each board has for application, heap, configuration, and PMEM. AccuSwitch does not use these columns.

Version column: This column shows what version of application code each CM-4400 (board) is running. This column should indicate the same version for all boards in the system. If a different application code version is displayed, a fresh download to all boards should be performed.

Refresh button: Click the **Refresh** button to refresh the display. The Board Status application does not poll for board information.

Section 7

Jupiter Control Center

Overview

The Control Center application displays board status and information, TFTP status, displays configuration options which you can select and activate. It is accessed by clicking the **JNS Application** button at the top of the JNS Control Console application and then clicking the **Control Center** button in the JNS Applications group.

Figure 196. The Control Center Application

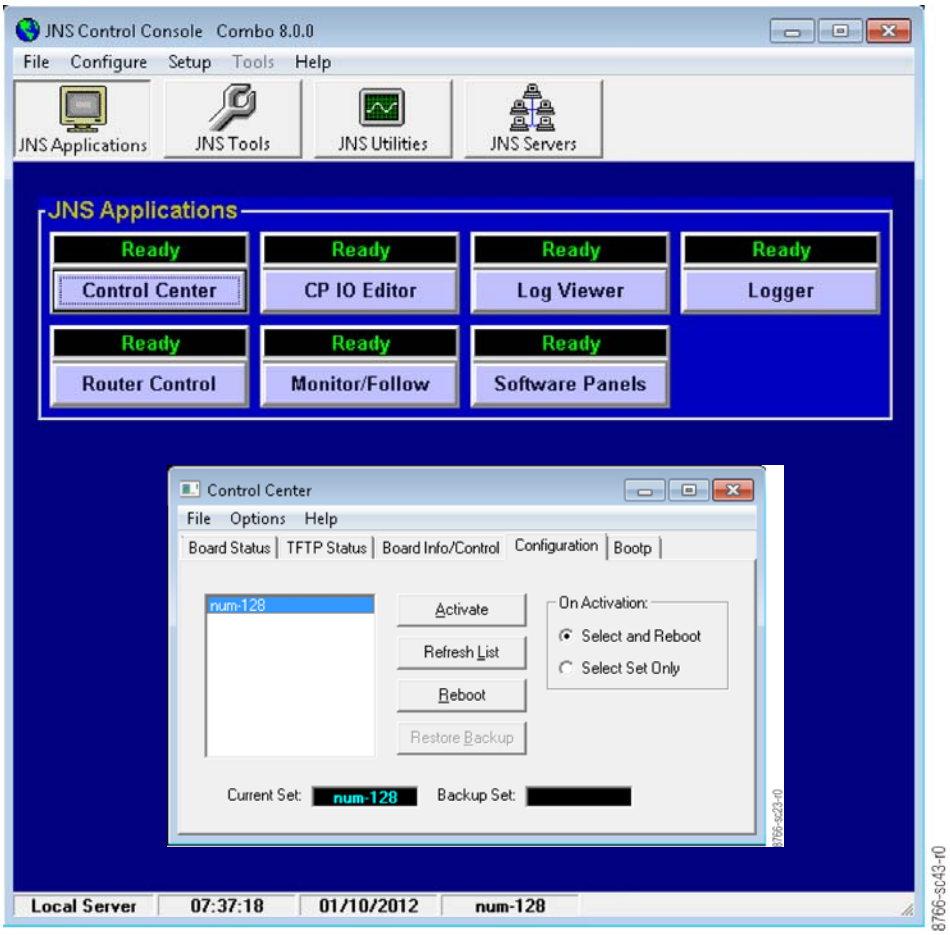

Menu Commands

Several commands are accessible through the control center's menu:

File Menu

Exit: This closes the application.

Options Menu

Scan Rate: Select the correct scan rate for your system for board up-time to be displayed correctly:

- **NTSC** - Select this option if you use NTSC.
- **PAL** - Select this option if you use PAL.

Time Sync: This item does not apply to CM-4400 units (it is used by the VM 3000, which is described in a separate manual).

Time Sync Help: Selecting this item will open a pop-up window that provides information about Time Sync, such as which Time reader has priority.

Note For information about time sources and synchronization for AccuSwitch applications, see *Time Standard Table* on page 203.

Help Menu

About: Displays the Control Center's About box with version information.

JNS Control Center Tabs

The JNS Control Center has four tabs:

Board Status: The Board Status tab shows a list of boards with the board's status and up time.

TFTP Status: The TFTP Status tab shows the state of Trivial File Transfer Protocol (TFTP) transfers to boards.

Board Info/Control: The Board Info/Control tab allows you to see board information and send commands to boards.

Configuration: The Configuration tab allows you to select configurations and activate them.

Board Status

The Board Status tab shows a list of boards and each board's status and up time.

Figure 197. The Board Status Tab of the Control Center Application

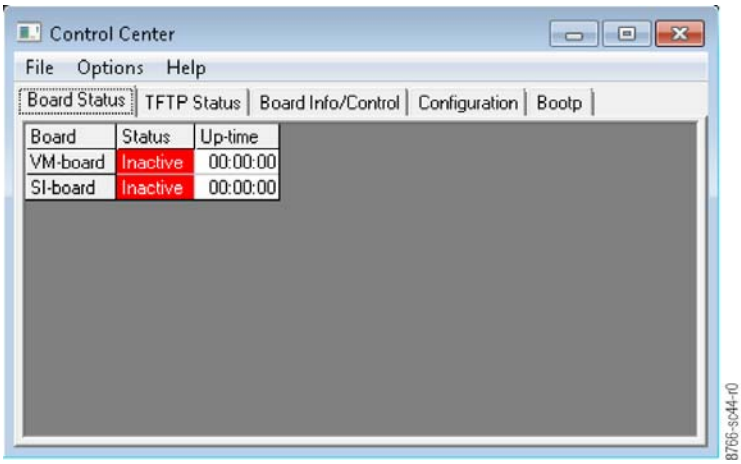

Board column: This column lists the board names in the order that they appear in the Network Description table (note that PC boards do not appear here).

Status column: This column shows the board status. The fields will be green if the board is active. If boards are inactive, the phrase "Inactive" will appear in the field and the field will be red. If a board is currently downloading, the phrase "LOADING..." will appear in the field, and the field will be cyan.

Up-time column: This column shows how long the boards have been up in days, hours, minutes and seconds. For the up-time display to be accurate you must have selected the correct Scan Rate option in the options menu (see below).

TFTP Status

The TFTP Status tab shows TFTP status while the boards are in the process of downloading.

Figure 198. The TFTP Status Tab of the Control Center Application

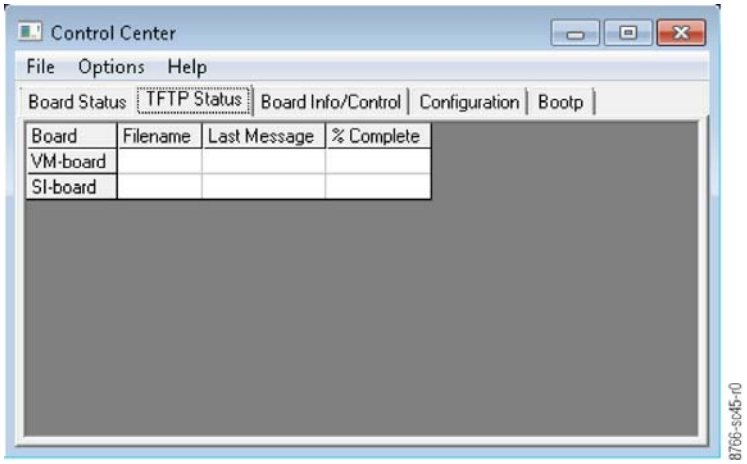

Board column: This column lists the boards in the order that they appear in the Network Description table (again, PCs do not appear).

Filename column: This column shows the name of the file that the board is downloading. In the example above, you can see some boards downloading their configuration files (.cfg), one board downloading code (.sys), and two boards have just finished downloading loader code (.ldr).

Last Message column: This column shows the status of the transfer. On a busy system, you may occasionally see packet time-out counts. This information indicates that the file server has missed responses from a board; it does not necessarily indicate a serious problem. Packet time-outs frequently occur on very busy systems. When a transfer succeeds, the "Transfer succeeded. <n> packets timed out." message will be displayed and the field will be green. If the transfer fails, the field will turn red, and a description of the problem will appear in the field. This condition may be temporary. The boards will usually attempt to start new transfers in this case, and the field will turn green again as the new transfer starts. A very large number of time-outs or frequent transfer failures could indicate problems with your network or configuration.

% Complete column: This column shows what percentage of the file that has been sent.

Board Info/Control

The Board Info/Control information can be used to help make certain that all system controllers are using compatible software and user-created configuration sets. It also allows you to send commands to the boards.

Figure 199. The Board Info/Control Tab of the Control Center Application

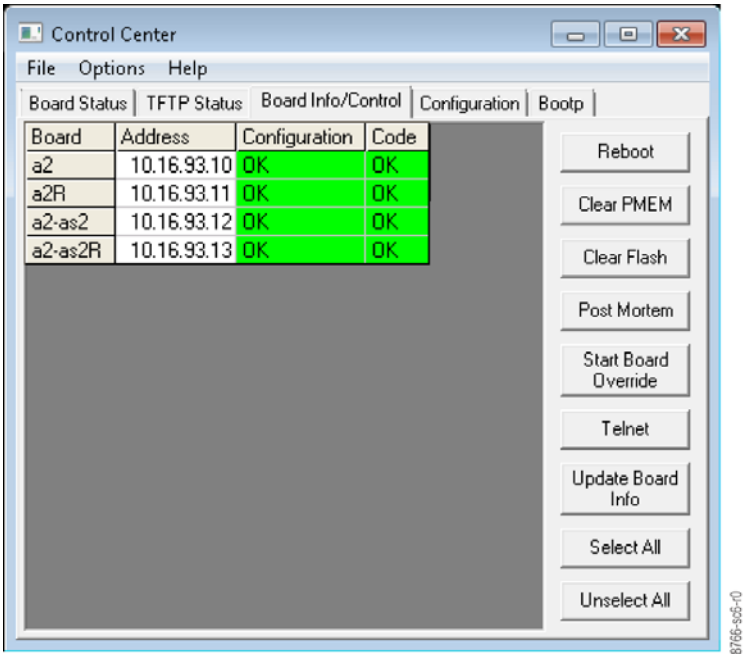

First column: This column shows board names in the order that they appear in the Network Description table (PCs do not appear).

Address column: This column shows the current IP address of the board.

Configuration column: This column indicates whether the board's configuration set matches the active set on the file server.

- If the sets match, "OK" will appear in the field and the field will be green.
- If the sets don't match, the field will be red and "MISMATCH" appears.

This status will usually appear if you activate a new set without rebooting. If the board is downloading or inactive, the field is cyan and "?" appears. See DOWNLOAD NOW / REBOOT LATER ("PENDING REBOOT") for information about "Pending Reboot" messages.

Code column: This column shows whether the board's operating system code matches the code on the file server. Indicators are the same as for the Configuration column.

Selecting Boards

You must select boards before you can send commands to them.

To select individual boards:

- Click anywhere in that board's row in the table. The selected board will appear in a darker gray in the Board column and the board's IP address field will turn blue.
- To de-select a board, click in the row again.

To select all the boards:

- Click on the **Select All** button.
- To de-select all boards click on the **Unselect All** button.

Reboot

The **Reboot** button sends a reboot command only to the selected boards. This differs from the **Reboot** button on the Configuration tab, which sends reboots to all boards.

Note Having different versions of software or configuration tables between boards can cause system instability.

Clear PMEM

The **Clear PMEM** button clears PMEM on the selected boards. See *Clearing Persistent Memory (PMEM)* on page 107 for more information.

Clear Flash

The **Clear Flash** button clears flash memory on the selected boards and reboots them. The boards will immediately begin downloading all configuration and code.

Post Mortem

The **Post Mortem** button starts the post-mortem debugger on the selected boards.

Start Board Override

The **Start Board Override** button is a troubleshooting tool. When the **Start Board Override** button is selected, and a board selected and booted, the basic operating system will launch but the Jupiter processes will not start. Boards in this state will display a Probe message similar to "`pmemOverrideStartBoard is set, not starting this board.`"

Using Probe, one can enter the `startBoardOverrideShow` command from the shell to determine if the board will or will not start up on the next reboot. When troubleshooting is completed, either reboot the board (which will automatically start all processes), or use the Probe command, `startBoard` to resume normal board operation.

Probe Connections

The protocol for the Serial port on the front of the CM-4400 is 9600 baud, 8 data bits, 1 stop bit, and no parity.

Figure 200. Location of Console Connector

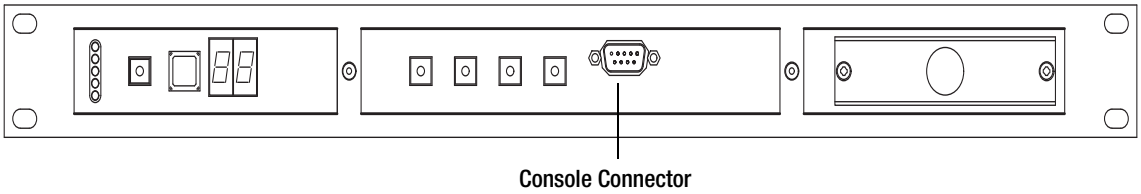

The Console Cable pin connection diagram is provided below.

Figure 201. Console Cable Pin Connection Diagram

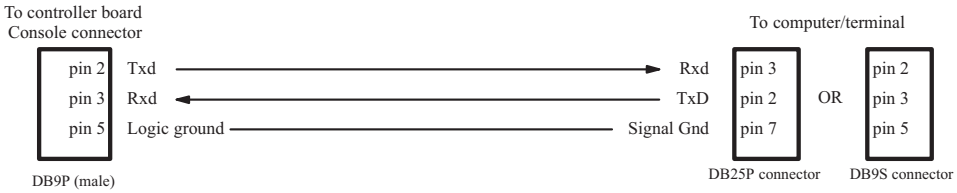

Telnet

The **Telnet** button opens telnet windows for the selected boards. For this command to work, you must have a “telnet.exe” application somewhere in your search path. The default TCP/IP Window’s installation will do this for you. Note that if you have selected several boards, the telnet windows may appear on top of each other. Simply move them to see the ones underneath.

Update Board Info

The **Update Board Info** button requests updated board information from the boards. The control center does not poll for board information. It does attempt to update board information when boards become active, but the display may occasionally show incorrect information. If you suspect incorrect information is being shown, click the **Update Board Info** button.

Configuration

The Configuration tab allows you to see a list of compiled sets and select a set for activation. It also allows you to restore a previously activated set and reboot the boards.

Figure 202. The Configuration Tab of the Control Center Application

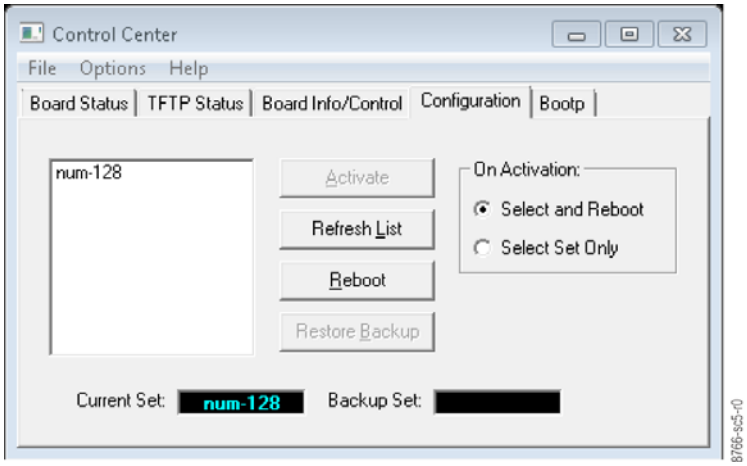

Activate a Set

On the left side of the window, you will see a box that shows a list of compiled sets a set must be activated.

Follow these steps to activate a set:

1. Click the Configuration tab.
2. Click the name of the set that you wish to activate name in the list on the left side of the dialog. The "ARDH_69e" set is selected in the example shown in Figure 203
3. Click the **Select and Reboot** radio button if it is not already selected.
4. Click on the **Activate** button. The JNS message status dialog will then appear. This dialog will inform you that the set is being updated.

Figure 203. The Set Activation Status Dialog

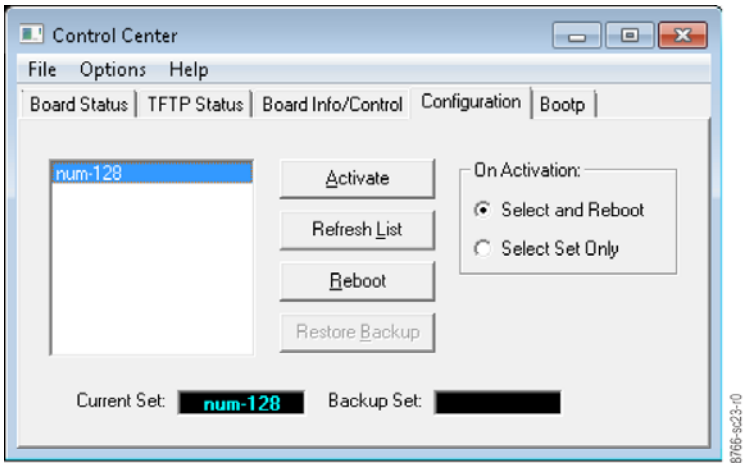

The activated set will then appear in the *Current Set* field at the bottom left of the dialog (see Figure 204).

Figure 204. The Set Activation Selection Completes Dialog

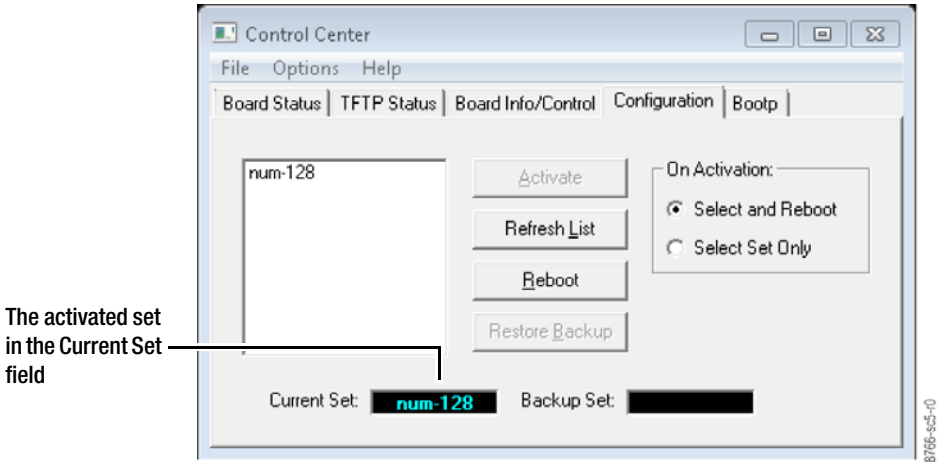

At this point, a reboot command will be sent to all the boards in the set, and the boards will reboot and download the new set.

CAUTION Once the activate/reboot command has been issued, do not interrupt the process until the reboot is complete. Interruptions such as sending a new command, turning off power, or disconnecting cables will have unpredictable consequences. With a CM-4400, such consequences can include corruption of data stored in memory.

Perform a Pending Reboot Procedure

Follow these steps to perform a Pending Reboot procedure:

1. Start the Control Center application (JNS application> Control Center). The Control Center dialog will then appear (Figure 205).

Figure 205. The Control Center Dialog

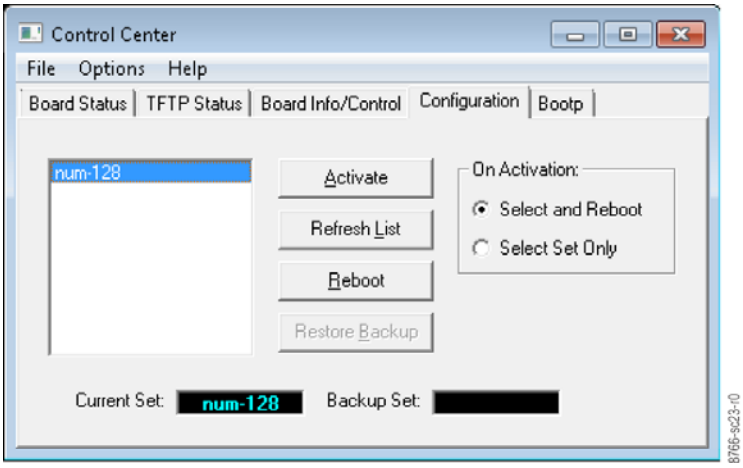

2. Click the **Select and Reboot** radio button in the *On Activation* section.

3. Select the Configuration set and then click the **Activate** button (Figure 205).

Note In order to download new application code, you must select a configuration set for Activation even if it has the same name as the set shown as the Current Set.

You will need to reboot the processor for the updated configuration file code update to be applied.

Reboot Processor

Follow these steps to reboot the CM-4400's processor:

1. Click the **Board Info/Control** tab on the top of the Control Center dialog.

   The system will compare the configuration set and the application code that was just downloaded with the current configuration set and the application code that is in operation.

   - If the configuration set is different, the phrase "Pending Reboot" will appear in the Configuration column (Figure 206).
   - If the application code is different, the phrase "Pending Reboot" will appear as shown in (Figure 207).

Figure 206. Different Configuration Set

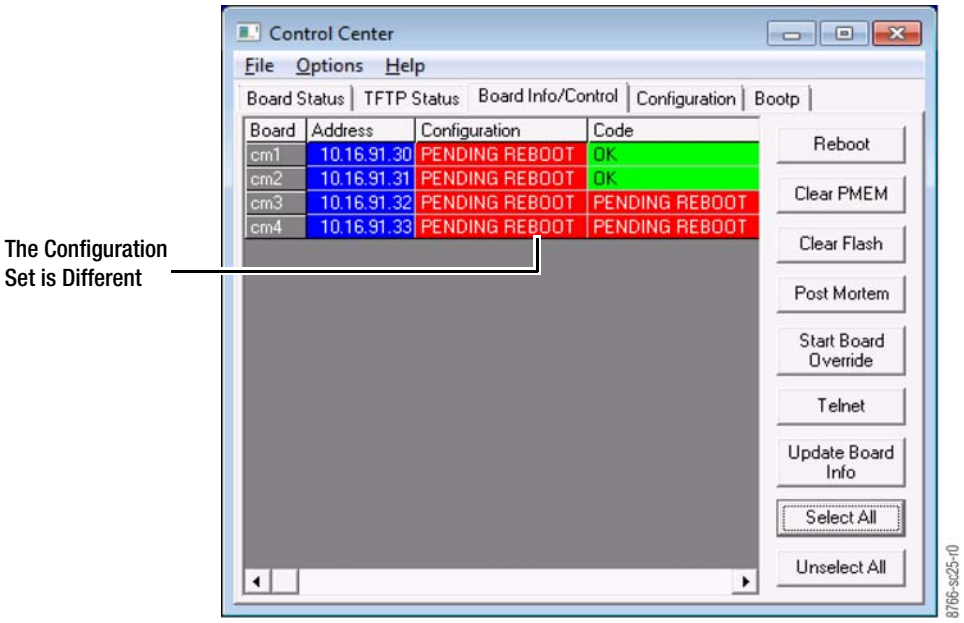

Figure 207. Different Application Set

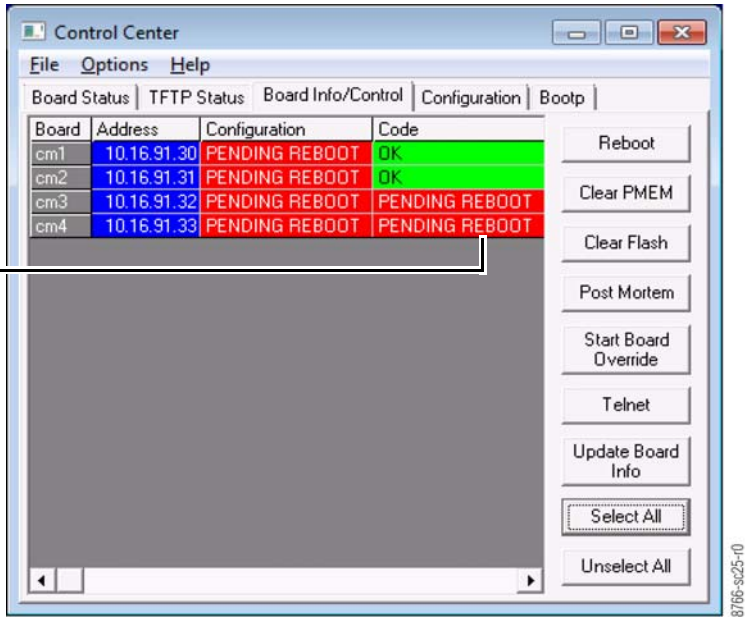

Note You may observe a mismatch indication in the Code column while the download is in progress (Figure 208). This message will appear because of the size of the application, you should wait until the Pending Reboot message appears in the Code column before continuing.

Figure 208. MISMATCH Indication

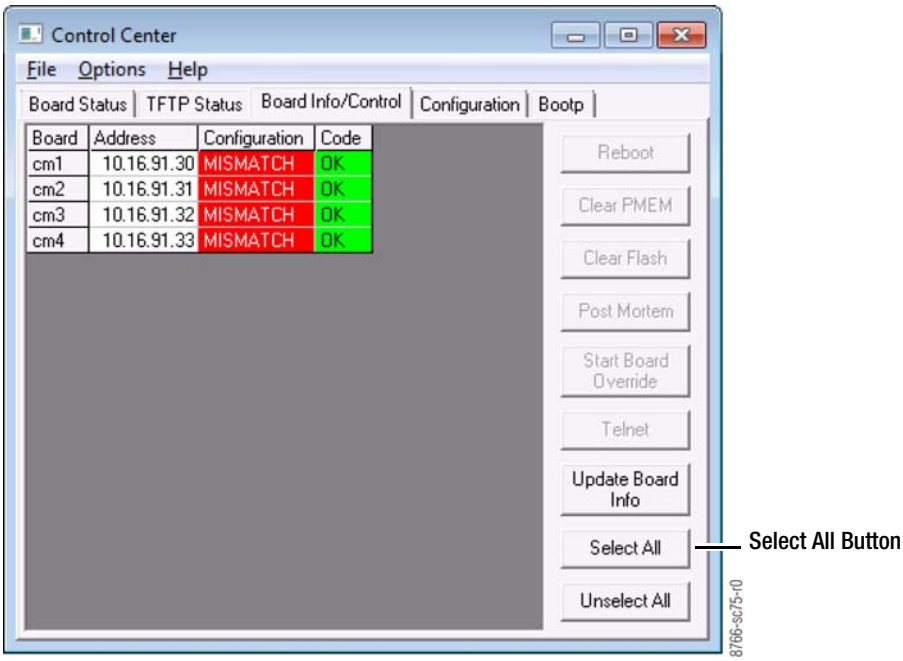

2. Select the processors by clicking the **Select All** button on the lower right side of the interface (Figure 208). It is recommended that you reboot all the processors at the same time when updating code or a configuration set.

3. Click the **Reboot** button or the **Clear PMEM** button on the top of the right side of the interface. The OK message will then appear in both the Configuration and Code columns.

Note For more information about the **Clear PMEM** button and the effects of clicking this button see *Clearing Persistent Memory (PMEM)* on page 107.

BOOTP

BOOTP is a network protocol that is used by a network client (the CM-4400) to obtain an IP address from a configuration server. The Bootp tab provides a log of the BOOTP transactions.

Clicking the **Clear** button will erase the information in the log.

Figure 209. The Configuration Tab of the Control Center Application

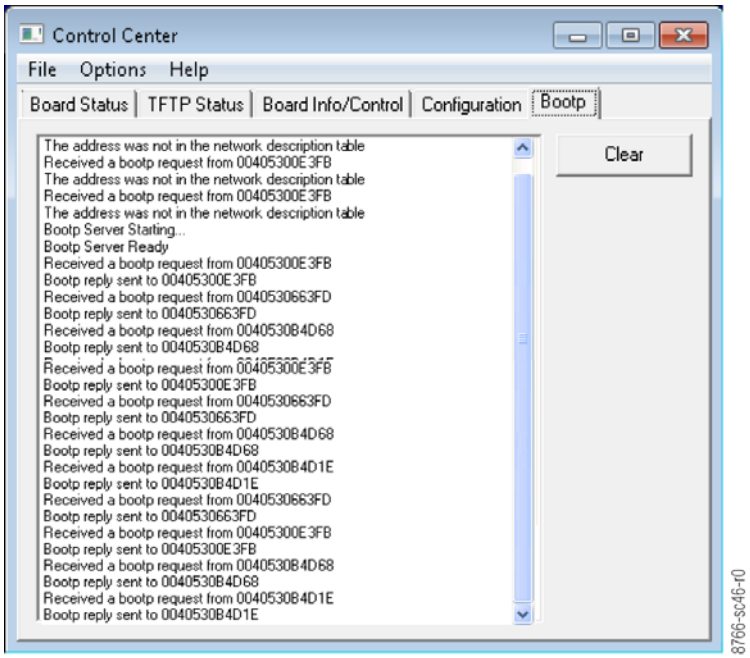

Section 8

Router Control Application

Overview

The Router Control Center application provides the ability to do simple Takes in the currently active set using the control panel input, output, and level set that use the cp3800 type sets. The Router Control dialog is accessed by clicking the **JNS Application** button at the top of the JNS Control Console application and then clicking the **Router Control** button in the JNS Applications group.

Figure 210. The Router Control Application

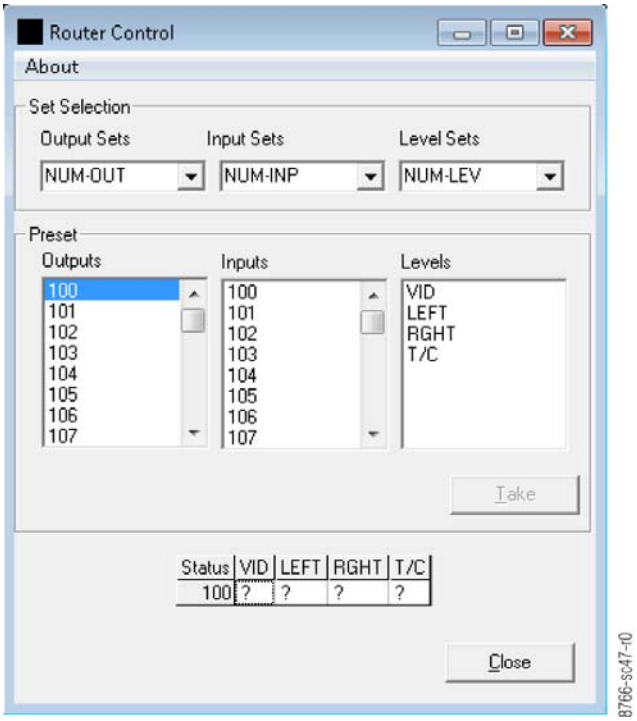

Display Status

The table at the bottom of the dialog displays the status for the currently selected output. Initially, the grid will be empty because no output is selected.

Figure 211. The Router Control Application

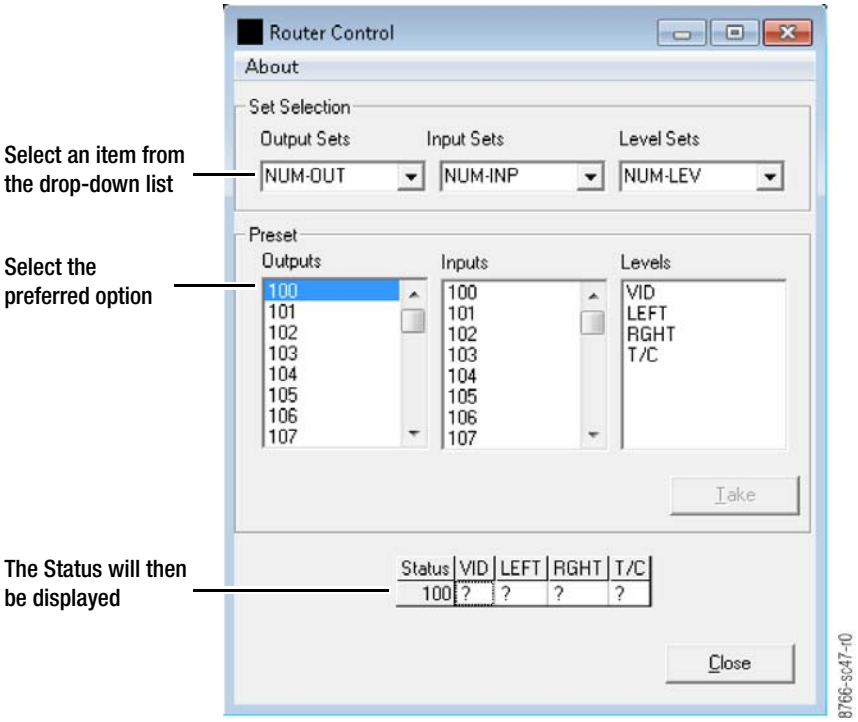

Follow these steps to display status for an output

1. Select an output from the Output Sets drop-down list.
2. Select the preferred output from the options listed under Outputs in the Preset area.

   The name of the selected output will then appear in the Status column. The status is then displayed, for each level, in the selected level set.

   - If nothing is currently switched to the output in any of the levels, a question mark, “?” will appear.
   - If the display will not fit across the window, a scroll bar will appear below the table.

Perform Takes

Simple Takes can be made using any control panel input, output and level set in the currently active set.

Figure 212. The Router Control Application - Performing a Take

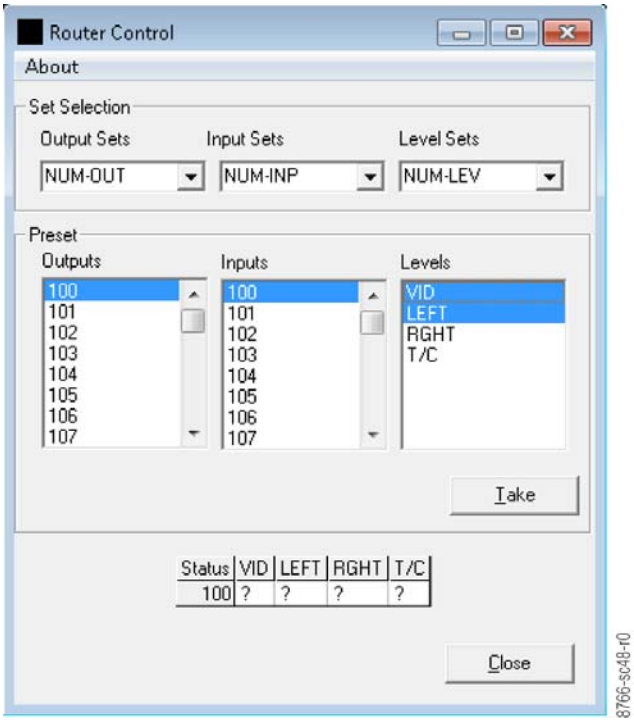

Follow these steps to perform a Take:

1. Select one input, one output, or one or more levels in the SET Selection area. To deselect a level, click on it again. Click the **Take** button.
2. Select one input, one output, and one or more levels in the Preset area.
3. Click the **Take** button to complete the take (Figure 212).

The status display will then be updated.

Section 9

Force Unlock

Overview

The Force Unlock application allows you to unlock or unprotect any output that has been locked or protected from anywhere in the system. You access the application by clicking the **JNS tools** button and then clicking the **Force Unlock** button in the console.

Table Description

Figure 213. The Force Unlock Application

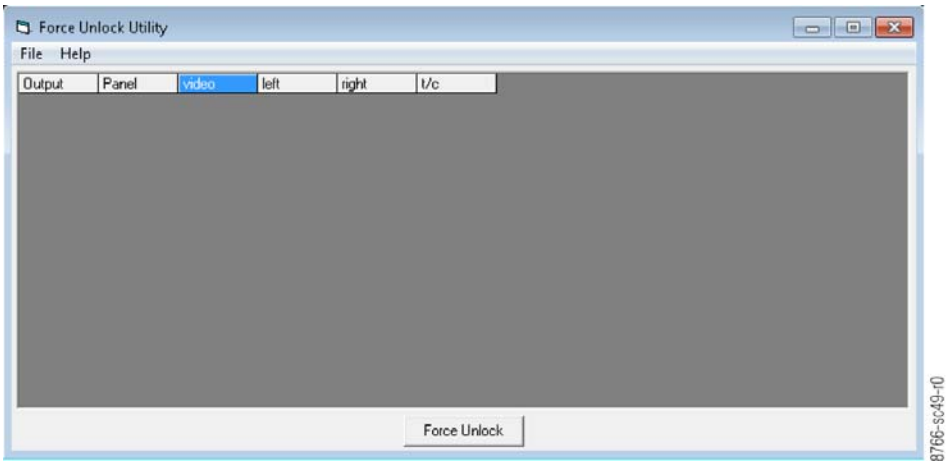

Output: The Output column lists the names of any outputs that are locked or protected.

Panel: The Panel column displays the panel that locked or protected the output. For the rare times that the application is unable to determine which panel was used, the field may be blank or may contain a number.

Columns 3-n: Columns 3-n are for the levels that are defined in the Switcher Description table. Each column shows whether a particular output and level are locked or protected.

Menu Bar

The following menus are accessible from the Menu bar.

File

Exit: Closes the application.

Help

About: Displays the application's about box with version information.

Unlock and Un-protect

Unlock and Un-protect an Output

Follow these steps to unlock or unprotect an output:

1. Click anywhere in the Output or Panel columns. The entire row will be selected. (To deselect a line, simply click in the first two columns again.)
2. Click the **Force Unlock** button in the bottom center of the dialog.

Figure 214. The Force Unlock Application - Unlocking and Un-protecting an Output

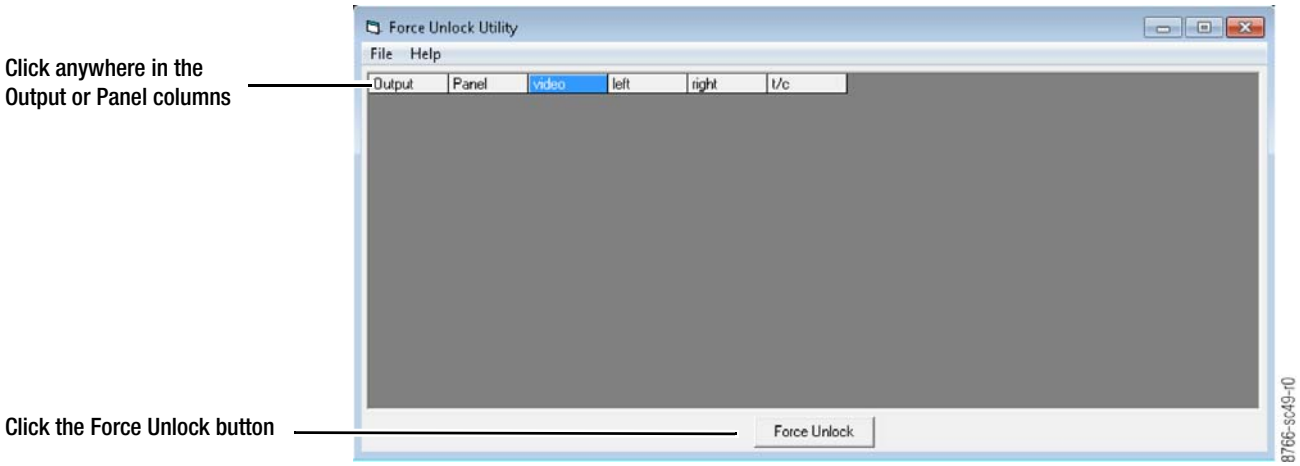

The output will now be unlocked or unprotected, and the line will eventually be deleted from the display.

Note If complete status for all levels of an output does not appear you may need to repeat this step to unlock/unprotect all levels.

Unlock and Un-protect an Individual Output

Follow these steps to unlock an individual output or level:

1. Click the cell in the table that is locked.
2. Click the **Force Unlock** button.

Figure 215. The Force Unlock Application - Unlocking and Un-protecting an Individual Output

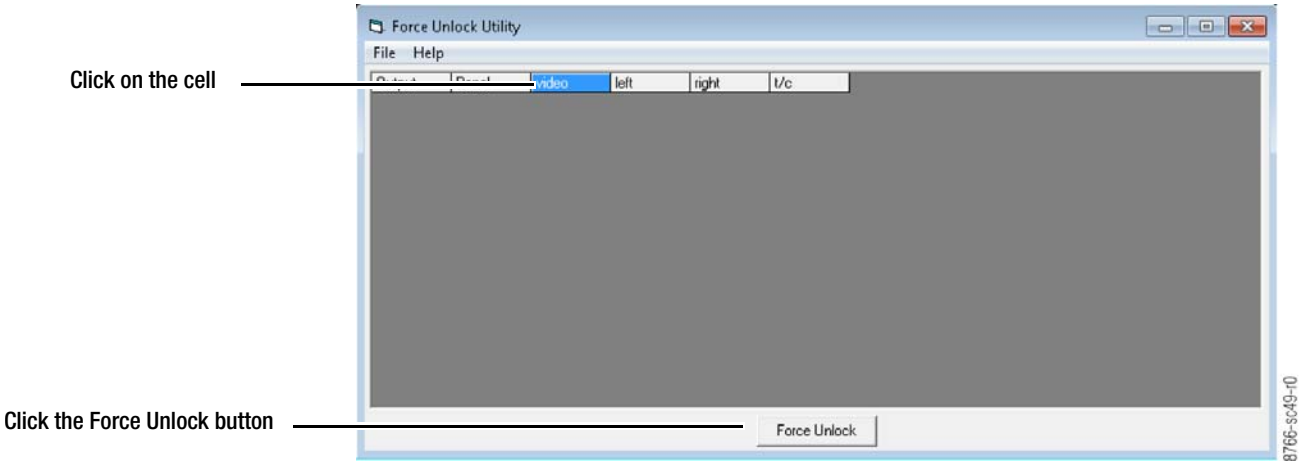

The cell should be cleared. The line will not be deleted from the table until all levels on that output have been unlocked or unprotected.

Section 10

Logger and Log Viewer

Overview

The JNS Logger and Log Viewer applications are used to create, view, and print log files of Jupiter LAN activity. These log files can be useful for troubleshooting. The Log Viewer will display Jupiter LAN activity as it occurs and record errors detected by the Jupiter Network Suite.

Connecting the CM-4400 to house time code is recommended to ensure the accuracy of the date/time stamp. For more information about time code, see *Time Standard Table* on page 203.

Figure 216. Board Status Application

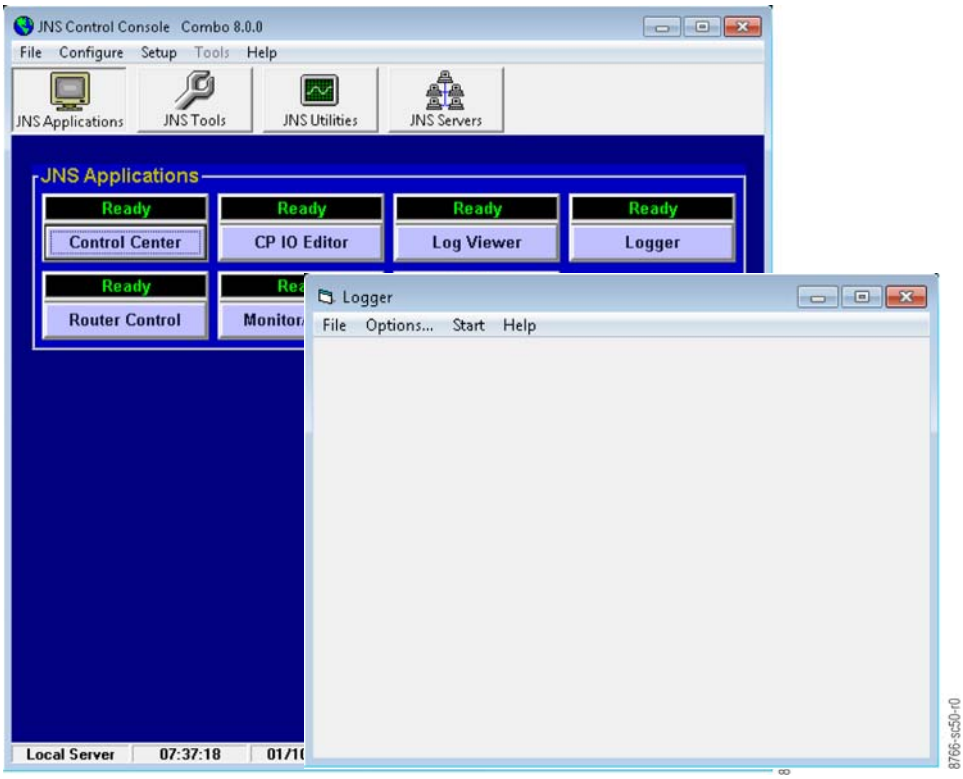

The JNS Logger and Log Viewer applications require installation of the Jupiter Network Suite. The log file will be saved on whatever computer is running the Log Server application. This computer can be identified by going to JNS Control Console > JNS Servers and looking for the **Log** button. If the word "Local" appears above the **Log** button, you are using the computer with the log file.

Run the JNS Logger

Follow these steps to run the JNS Logger:

1. Select the **Logger** button in the JNS Applications group (Figure 216 on page 247). (Start > Programs > Jupiter Network Suite > Logger.) The Logger dialog will then open (Figure 217).At first, the dialog will be clear.

Figure 217. The Logger Dialog Box

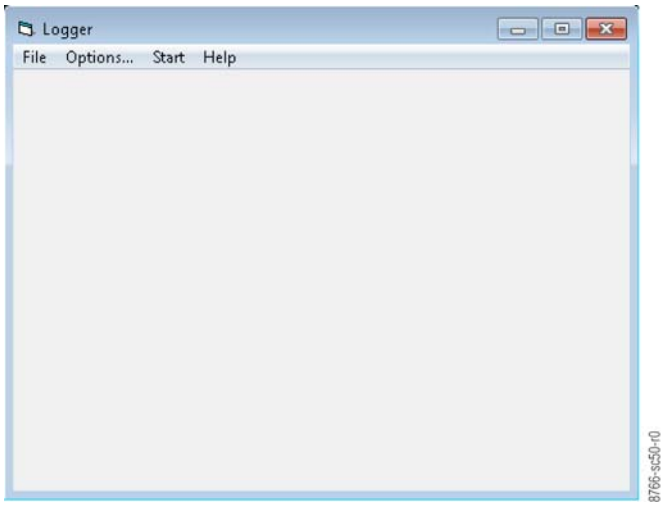

2. Click the Options menu. The Logging Options dialog will then appear. The Logging Options dialog is used to select which events to log.

Figure 218. The Logging Options Dialog

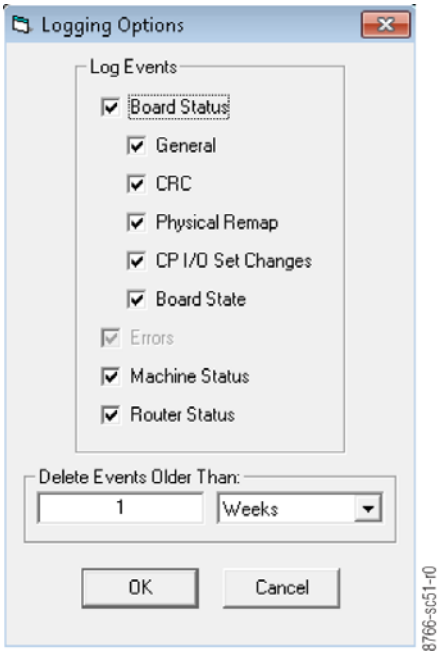

3. Select the events that you want to see information about by clicking the appropriate check boxes.
4. Enter the time frame for which you want to delete events that are older. In the example in Figure 218 on page 249, all events older than three days will be deleted.
5. Click the **OK** button to save the settings. Clicking the **Cancel** button will close the dialog without saving the changes.

Run the JNS Log Viewer

The JNS Log Viewer can display Jupiter LAN activity as it happens, even if the JNS Logger has not been started. However, the JNS Logger must be running in order to capture the events; that is, have them saved to a file automatically.

To run the Log Viewer, select Start > Programs > Jupiter Network Suite > Log Viewer.

Figure 219. The LogViewer (Dynamic Data) Dialog

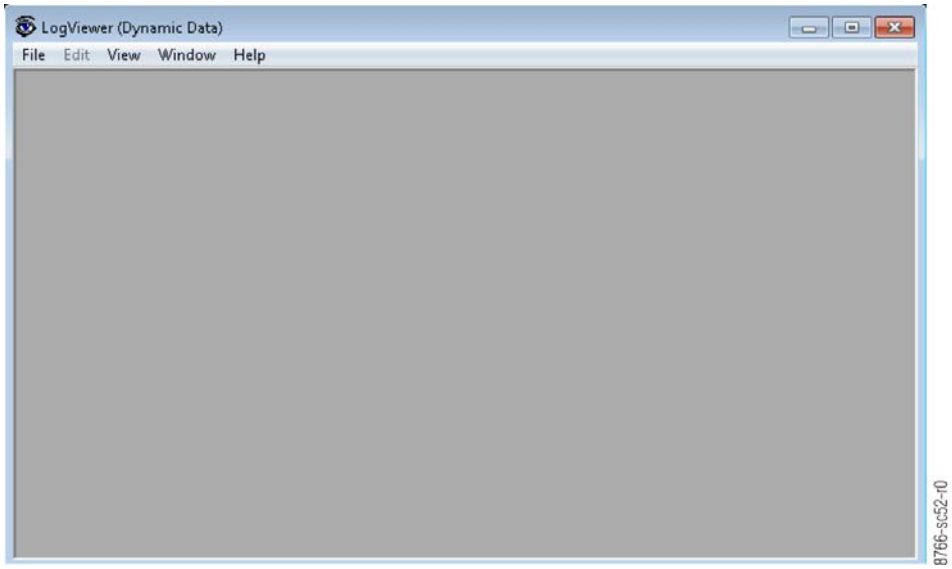

Dynamic Displays

When the Log Viewer is first started, it will be in the Dynamic Data mode. That is, all displays will show Jupiter LAN activity as it happens. The Dynamic Data mode will hold up to 256 lines of information.

Follow these steps to open a Dynamic Display:

1. Select the View menu (Figure 220 on page 251) from the Menu bar of the LogViewer.
2. Select the preferred Dynamic Displays from the drop-down menu (Figure 221 on page 251).

Figure 220. The LogViewer- Dynamic Displays- Menu Options

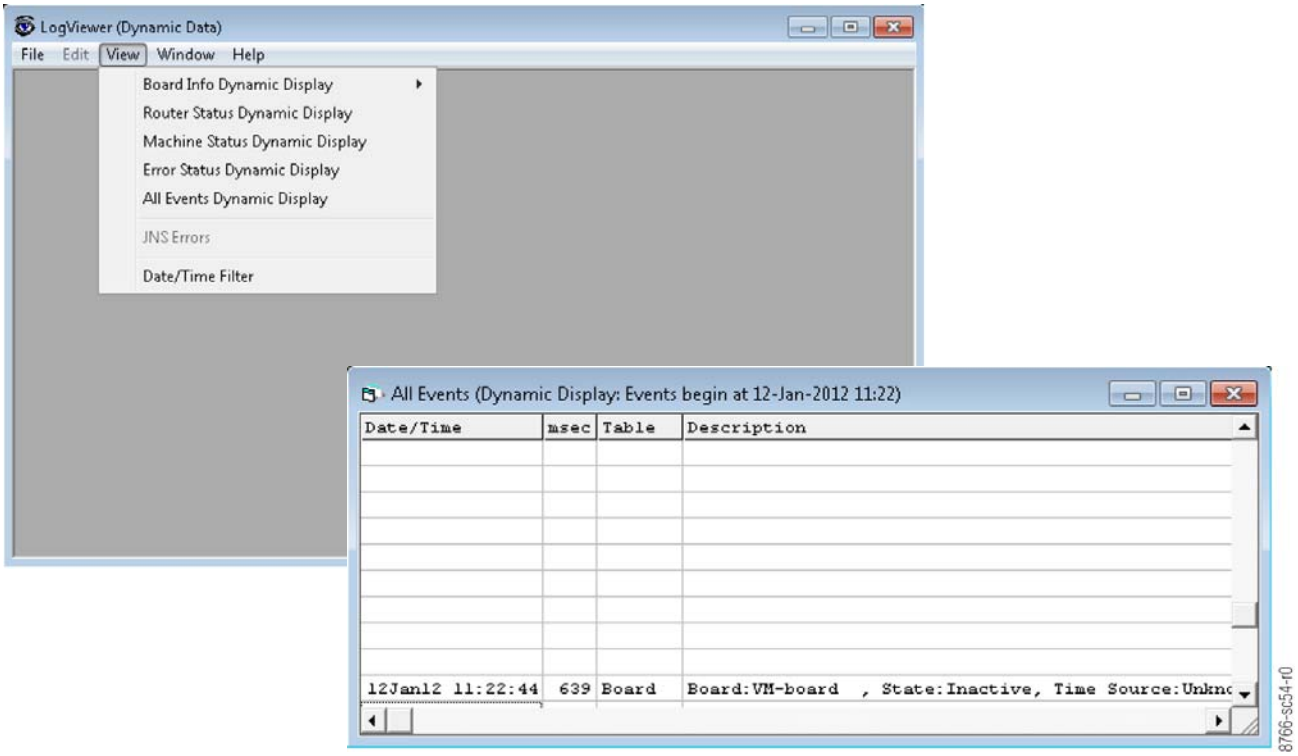

The selected option will then appear (Figure 221).

Figure 221. The LogViewer- Dynamic Displays

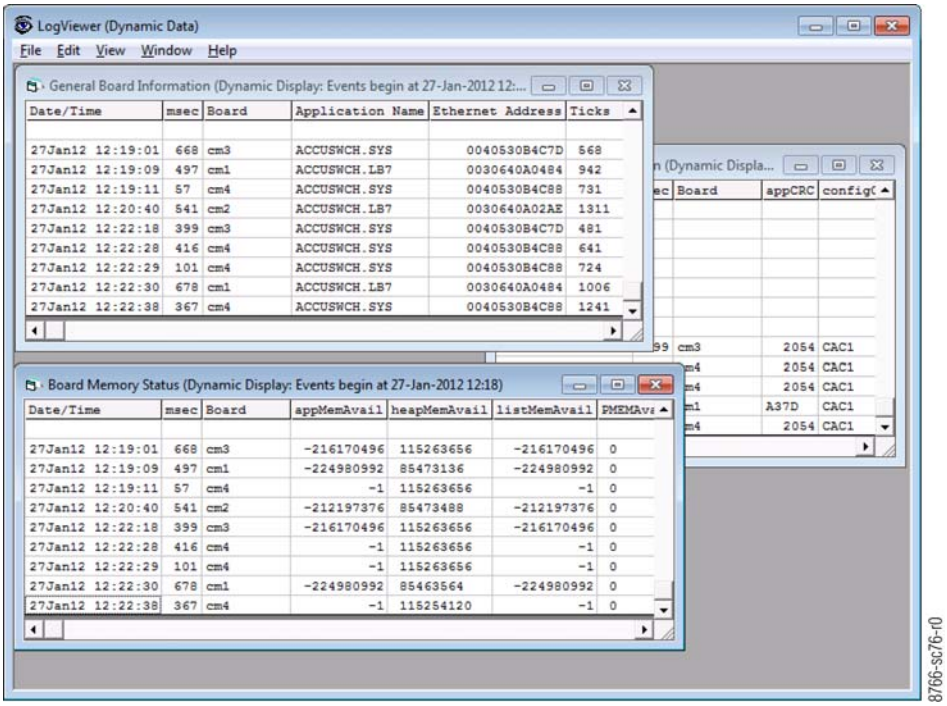

Note To select Dynamic Displays after opening a log file, select Dynamic Data from the File menu (File > Dynamic Data) and then select the preferred Dynamic Displays.

Static Displays

Follow these steps to view Jupiter LAN activity that has been logged to a file

1. Select the File menu from the Menu bar of the LogViewer.
2. Select the Open option to open the preferred log file. The Open Log Database dialog will appear (Figure 222 on page 252). This dialog is a standard Windows Open dialog.

   Log files are created in the logdata subdirectory of the directory where JNS was installed. That is:

   C:\Program Files (x86)\Grass Valley\Jupiter\ Jupiter Network Suite\logdata.

Figure 222. The Open Dialog

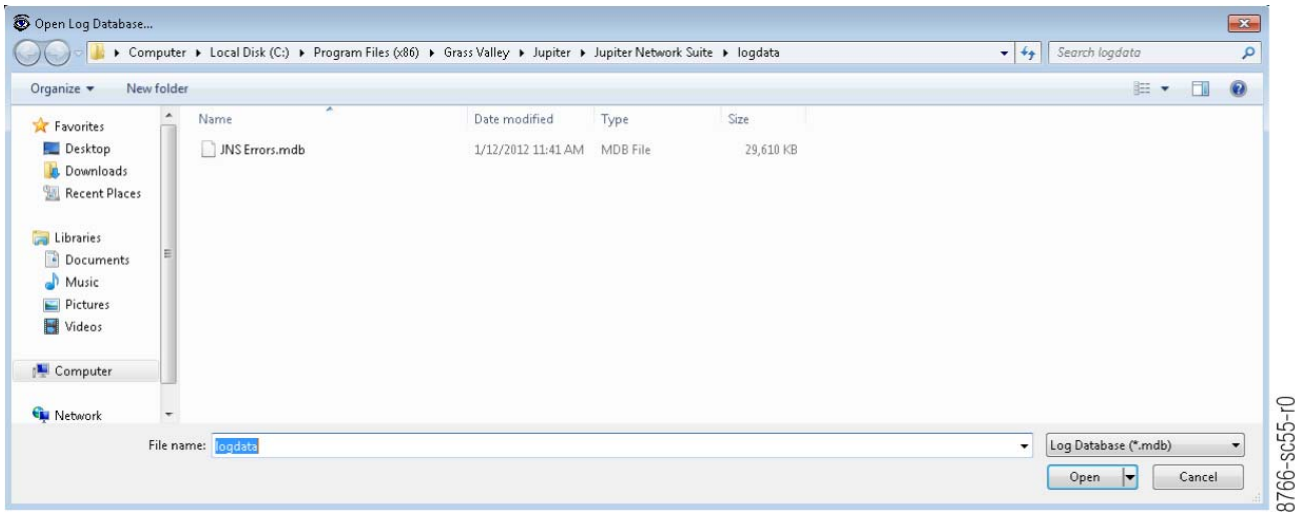

3. Select the preferred log file and then click the **Open** button. The file will then appear in the LogViewer.
4. Select the preferred display from the View menu.

   A Dynamic Display and Static Display can be displayed at the same time. The caption of each window will indicate if it is a Dynamic Display (Figure 223). If the display is not a Dynamic Display, the caption will indicate which log file to which the data pertains. The JNS Log Viewer can simultaneously display multiple log files.

Figure 223. The Logging Options Dialog

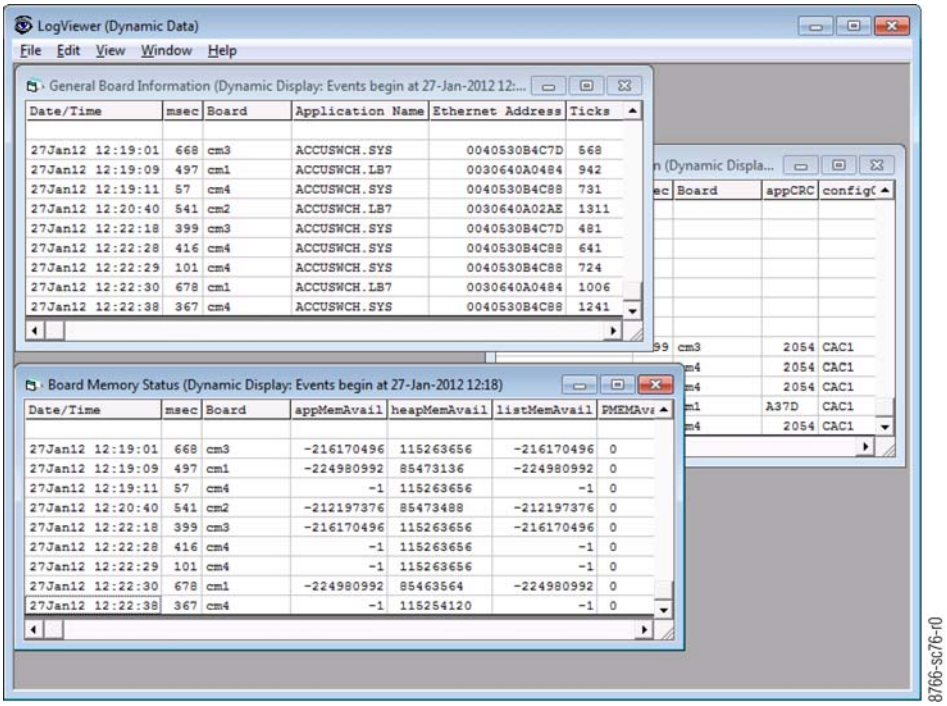

5. Sort displays by clicking on the column heading.

Date/Time Filter

Set the Date/Time Filter, (View> Date/Time Filter) to filter log data by date. This filter will be applied to the current Static Display, as well as any new Static Display that is created after setting the filter.

Note For JNS Release 5.1.0 and later: The Date/Time Filter may not work properly when Windows Regional Settings other than “English (United States)” are being used.

Print/Export a Display

To Print a display, select File> Print. The standard Windows Print dialog will appear.

Figure 224. The Print Dialog Box

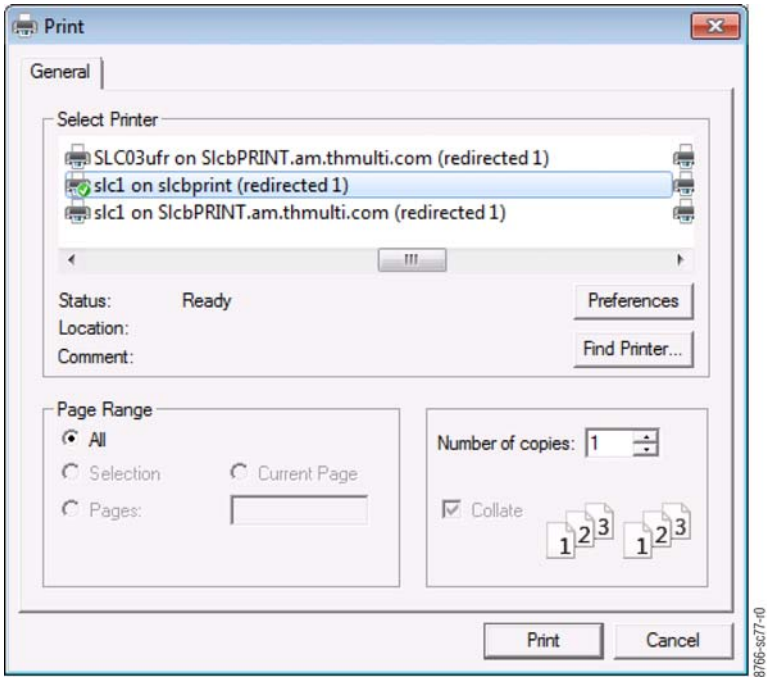

Follow these steps to Export a display:

1. Select File > Export. The Export dialog will then appear.

Figure 225. The Export Dialog Box

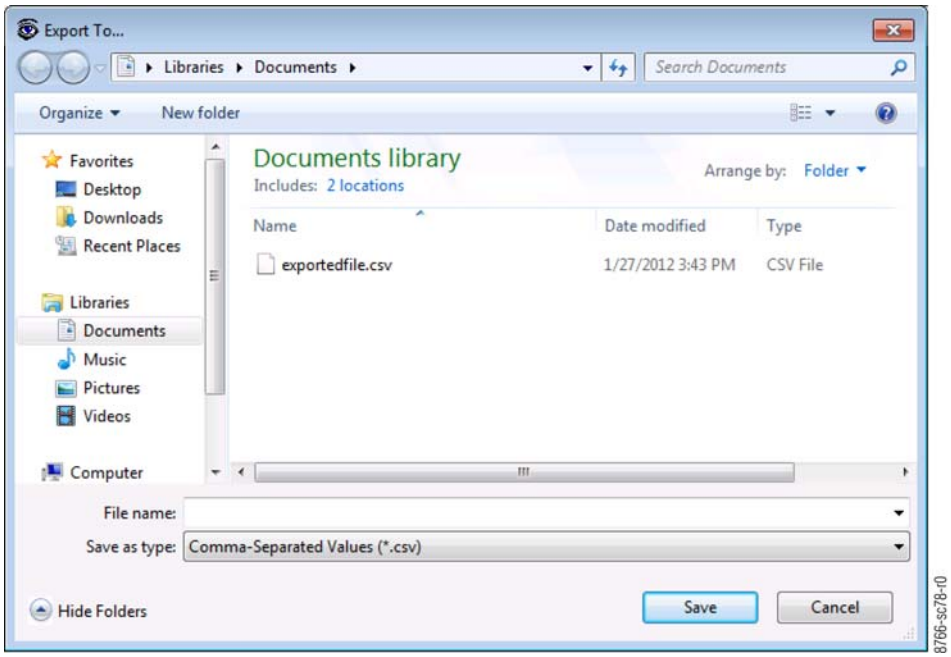

2. Enter a name for the file in the *File Name* field.

3. Click the **Save** button.

Adjust Column Widths

Sometimes, some of the fields in a Log Viewer grid may be truncated.

Follow these steps to see all the data in the dialogs:

1. Select the View menu.
2. Select the Auto-adjust column widths option (Figure 226).

Figure 226. The Auto-Adjust Column Widths Option

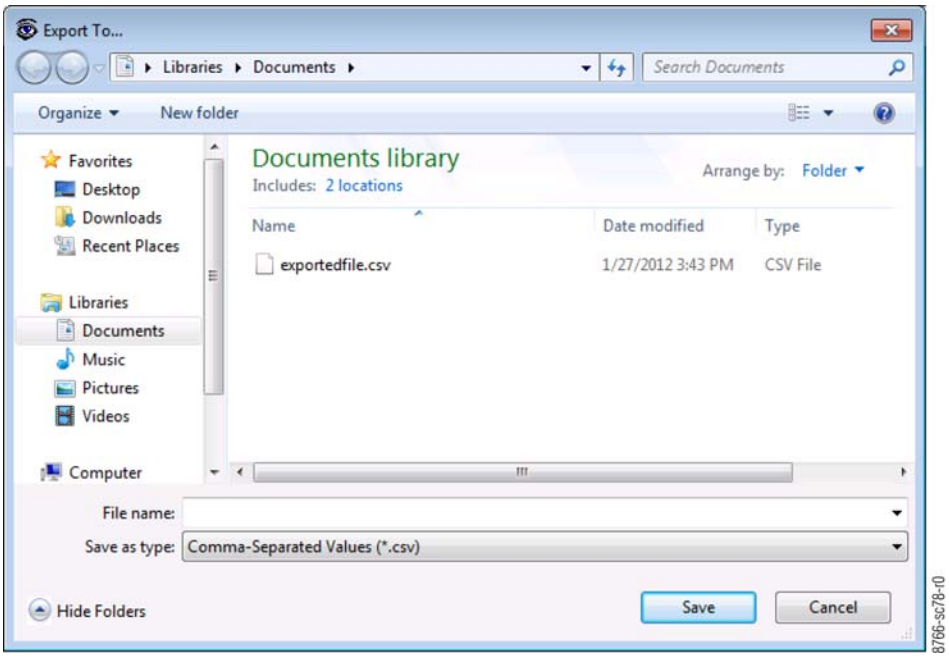

The columns will then be automatically resized to fit the largest field in the column.

Options

The All Events table may have an exceptionally large *Description* field. If you are using a low-resolution screen (for example, 800x600), you may be unable to make the window large enough to see the entire field. The following options may be used to see all of the data:

- You can cut and paste the field or fields into another application (like Notepad), where you can see the entire field.
- You can also export the table to a comma separated value (CSV) file, where it can be viewed with applications like MS Excel.

Section 11

Troubleshooting

CM-4400 Checklist

Follow the checklist below and verify the correct settings or connections if the CM-4400 AccuSwitch system does not go on-line or switch properly.

- ❑ Control panels are connected to the proper ports with the correct protocols as defined in the appropriate tables:
  - **Network Description**: Tells the system what controller boards are present.
    - Verify that the CM-4400's address.
  - **Serial Protocol**: Configures the serial ports on the rear of the controller.
  - **Switcher Description**: Defines the routing switchers in the system.
    - Check that the physical level assignment coincides with the levels to which the switchers are set.
  - **Switcher Input**: Defines the sources that are connected to which of the routers physical inputs, and assigns a switch name to each defined combination of physical inputs and levels to be switched.
  - **Switcher Output**: Defines the destinations that are connected to which of the routers physical outputs, and assigns a switch name to each defined combination of a physical output and levels to be switched.
  - **Control Panel Sets**: Provides inputs, outputs, levels, sequences and overrides to the control panels in the system.
  - **MPK Devices**: Defines the control panels and other devices in the system; how and where they are connected and which control panel sets they use.

Note A Serial Device entry in the MPK table is required whether it is used or not. This entry can be an ASCII or an ESSwitch Device type.

- ❑ The Serial control panel cables are pinned correctly (if self-made). Each twisted pair in this cable must be individually shielded.

- ❑ The Crosspoint bus cables are connected from the CM-4400 to the routing switchers.
- ❑ The LAN cables are properly connected.
  - All twisted pair 10baseT using RJ45 connectors for the CM-4400 are connected to the Jupiter network hub.

Contact Grass Valley's Technical support after following the above suggestions (see *Contacting Grass Valley* on page 4).

CB 3000 Crosspoint Buffer and Interface

The window on the front of the chassis allows the fault indicators on the front of the CB-3000 card to be viewed. (See Figure 227)

Figure 227. CB 3000 Front Panel Status Window

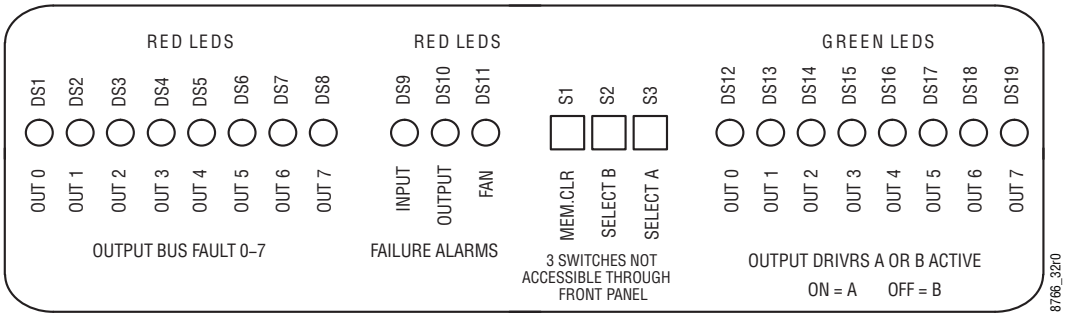

Red LEDs

Beginning at the left side of the window, the first eight RED LEDs are DS1 through DS8, the Output Fault Memory LEDs. These LEDs are normally off. If any of the LEDs are on, a fault has occurred at some time on the indicated crosspoint bus output.

The next group of three RED LEDs is the INPUT_FAILURE, OUTPUT_FAILURE, and FAN_FAILURE LEDs, respectively. These LEDs are normally off. An on condition indicates the fault described by the LED name.

Three local changeover switches on the front of the CB 3000 card are not accessible from the front panel. They are the local equivalent to the front panel push buttons.

Green LEDs

The eight GREEN LEDs at the right side of the display window are Output Configuration LEDs DS12 through DS19. They indicate the A output drivers are active on their respective outputs, 0 through 7. These LEDs are normally ON, indicating the default "A" position. Any LED that is OFF indicates that its respective output has switched to the "B" driver position.

CM-4400 System Codes

Error Codes

The Jupiter AccuSwitch Error codes are listed below. The number, short message, and detailed description are shown. You can click a message range, of the number that is displayed, to see the table for that range.

[*Messages 01 to 08*] [*Messages 09 to 10*] [*Messages 11 to 18*] [*Messages 19 to 20*] [*Messages 21 to 28*] [*Messages 29 to 30*] [*Messages 31 to 38*] [*Messages 39 to 41*] [*Messages 41 to 49*] [*Messages 49 to 50*] [*Messages 51 to 58*] [*Messages 59 to 60*] [*Messages 61 to 68*] [*Messages 69 to 70*] [*Messages 71 to 78*] [*Messages 79 to 7E*]

You will then need to read the information for the specific Message number that is displayed.

Table 10. Messages 01 to 08

Message Number	Short Message	Detailed Description
01	Logging configuration version is %s.	This message is logged anytime the log file is changed. It identifies the version of the logging configuration so that the log viewer knows how to read the files
02	Logger Error	This is a generic message for logger errors. These messages will typically only get logged to the console. This message is typically serious and warrants technical support.
03	Video SYNC input lost.	The CM-4400 could no longer detect a valid video SYNC reference. Check to make sure that the SYNC cable is properly connected to the CM-4400 and that the SYNC source is still active. If SYNC is not restored, frame accurate operations will not be possible.
04	Timecode input lost.	The CM-4400 could no longer detect a valid Time-code signal. Check to make sure that the Time-code cable is properly connected to the CM-4400 and that the Timecode source is still active. Also insure that video SYNC is connected to the time-code generator. If Timecode is not restored, frame accurate operations will not be possible.

Table 10. Messages 01 to 08 - (continued)

Message Number	Short Message	Detailed Description
05	Ethernet interface %s inactive for %d seconds.	The CM-4400 could no longer detect activity on the Ethernet interface. Check to make sure that the LAN cable is properly connected to the CM-4400 and that it is still connected to an active network. If the LAN is not restored, it will not be possible for the CM-4400 to communicate with the rest of the system, resulting in loss of status or control from other LAN devices.
06	Unconfirmed and unasserted takes on Xptbus.	The CM-4400 attempted takes on the Cross-point Bus (XptBus) but the takes were unconfirmed and not asserted. This usually indicates an open connection to the Routing switcher or that the cross points were not valid for the router. Check to make sure the XptBus cable is properly connected. If this does not fix the problem, double-check the Routing switcher's configuration.
07	Video SYNC locked to %s.	The CM-4400 has locked to a valid SYNC reference. When this occurs, SYNC is properly connected and working. However, verify the SYNC standard is correct for the system.
08	Timecode acquired.	The CM-4400 detected a valid Timecode signal. When this occurs, Timecode is properly connected and working.

Table 11. Messages 09 to 10

Message Number	Short Message	Detailed Description
09	Unexpected jump in timecode to %02x:%02x:%02x:%02x.	The Timecode input has jumped to a value that is not continuous with the current timeline. This may be expected if the input was just acquired or the Timecode generator was set to a new value. Because the video timeline was adjusted abruptly, some deferred events may be invalid. If this message occurs without cause or the timecode value is unreasonable, then check the generator and its connection to the system.
0A	Ethernet interface %s appears active.	The CM-4400 detected activity on the Ethernet interface. When this occurs the Ethernet is properly connected and working.
0B	Unable to initialize udp socket	The system was unable to initialize the Ethernet connection. This is typically a critical error and will result in lack of communication with other systems.
0C	Output %d, level %d is locked.	An attempt to switch the indicated output failed because it was locked.
0D	Output %d, level %d is protected.	An attempt to switch the indicated output failed because it was protected.
0E	Failed to change from configuration %s to %s.	The system failed to change the configuration. The system will continue to function, but with the old configuration set. Check the new configuration set and try again.

Table 11. Messages 09 to 10 - (continued)

Message Number	Short Message	Detailed Description
0F	SNTP client error %s for server %s	The application could not synchronize its internal POSIX clock with the remote server using the Simple Network Time Protocol (SNTP). The time management software will attempt to perform synchronization periodically to maintain the long-term accuracy of its internal POSIX clock. Note that the POSIX clock is not the same clock that is used by the system to manage frame-accurate operations. That clock, which is known as Video Time, is genlocked to the video SYNC reference. The POSIX clock is used as a reference for Video Time when the schedule permits an adjustment. No action need be taken on this event, unless the remote SNTP server is the only source of trusted time and several consecutive failed attempts have been logged. Check to make sure the SNTP server is available over the network and its NTP service is running correctly.
10	Error %d getting status back from router.	The system failed to read status from the Cross-point bus. This is typically a critical error. Contact Grass Valley Technical support.

Table 12. Messages 11 to 18

Message Number	Short Message	Detailed Description
11	Mismatch in status count, %d received, %d expected.	The switch count received back from the Routing switcher does not match the expected count. This typically indicates a critical software error.
12	Could not take xptStatusSem semaphore!	The system failed to communicate with the crosspoint bus. This is typically a critical error.
13	%s: Actor never ran.	The command scheduler controls all commands, which are known as actors. This message indicates that the actor did not execute. This may be because there was not enough time to allow it to run. This should not affect other commands.
14	Re-initializing status because %s.	Routing switcher status has been re-initialized due to a request for a PMEM clear, an adjustment in the configuration, or a change in the application.
15	Standby board, status will synchronize with the master.	The board is currently the slave board in a redundant pair. Status must be initialized by listening to the crosspoint bus refresh takes.
16	Cannot access status file \"%s\", error 0x%X: %s.	The current Routing switcher status is kept in a directory on the hard drive. A file in this directory could not be accessed. This may indicate a problem with the disk drive.
17	Cannot create status directory \"%s\", error 0x%X: %s.	The current Routing switcher status is kept in a directory on the hard drive. This directory could not be created, which may indicate a problem with the disk drive.
18	Unable to initialize %s component.	The application was unable to initialize a component. This is usually a fatal error.

Table 13. Messages 19 to 20

Message Number	Short Message	Detailed Description
19	Maximum number of status observers exceeded, only %d can be attached.	The system can only handle a limited number of observers and has reached maximum capacity.
1A	Failed to notify switch requestor (named %s) of a status change.	The status that should have been returned to the switch requestor could not be scheduled. This implies that the system is overloaded, but it should not happen on a properly balanced system.
1B	Error %d sending switches to the router.	An error occurred sending the switch to the Routing switcher hardware. This implies a hardware error.
1C	Could not create \"%s\" task.	A task on the system was removed. This indicates an overloaded system.
1D	SwitchListStore has exhausted its supply of RCDataLists.	The system has a limited number of switch lists. If this supply is exhausted, no more switches can be performed.
1E	The maximum number of switches was exceeded.	As the system processes a switch request it may add additional switches due to system configuration (follow switches, etc.). The addition of these switches has exceeded the maximum number of switches allowed in a single switch list.
1F	ConfirmAll has been turned %s for VenusRouterDriver.	If confirmAll is turned on, all switches will be confirmed regardless of the response from the Routing switcher (even if no Routing switcher is connected). This is typically used in development.
20	Cannot find file system: '%s'.	The indicated file system could not be found. This is typically a critical error. It may indicate a bad disk drive.

Table 14. Messages 21 to 28

Message Number	Short Message	Detailed Description
21	Error %d trying to initialize the crosspoint driver.	The system could not initialize communications with the crosspoint driver. This is typically a critical hardware problem. Contact Grass Valley's Technical support
22	An error was encountered while trying to resolve a path for the switch(es) received.	The switches could not be completed due to an error in the path resolver.
23	POSIX clock adjusted by %d mS from %s	The system's POSIX clock was adjusted to match a reference source. This type of adjustment occurs periodically every 17 minutes. Typically, the clock is adjusted by a small value (less than 1 second). If the adjustment is large (greater than 1 second), this message will be logged. This should not be a problem if it occurs infrequently.
24	POSIX clock set to %d/%02d/%d %02d:%02d.	The system's POSIX clock was set to the indicated time, which is most likely the result of a manual adjustment initiated through the call to setClock. Note that the Video time line was also recalibrated as a result of this change and could have resulted in a loss of any deferred events already in the time line.

Table 14. Messages 21 to 28 - (continued)

Message Number	Short Message	Detailed Description
25	Bootp failed: no response	The system did not receive a response from the bootp server (JNS). This message is typically logged because the JNS control center is not running. A network problem is also possible. The system will continue to operate using the previous application software and configuration. This will give undesirable results if the configuration or software has changed since the last reboot. If no changes have occurred, this should not be a problem.
26	Bootp failed: no vendor extensions.	This message is logged when a bad bootp response is received. The bootp response must have vendor specific information to be useful. There may be another bootp server on the network erroneously configured to reply to this system.
27	Bootp failed: no Jupiter extensions	This message is logged when a bad bootp response is received. The bootp response must have vendor specific information to be useful. There may be another bootp server on the network erroneously configured to reply to this system.
28	Bootp succeeded from server %s	This message indicates that a good bootp response was received from the indicated server.

Table 15. Messages 29 to 30

Message Number	Short Message	Detailed Description
29	Using configuration from %s for Bootp.	A valid bootp response was not received. The indicated source is supplying the required information.
2A	Using bootline and defaults for Bootp.	A valid bootp response was not received. The built•in defaults are supplying the required information.
2B	Activate command received-updating code.	The “activate” command was received. This is used to change the configuration set without reboot. However, the system will reboot if the new configuration set contains changes that requires it.
2C	Reboot command received-rebooting	The “reboot” command was received. This is used to reboot the system.
2D	Clear Persistent Memory command received-memory will re-initialize on reboot.	The “clear persistent memory” command was received. This is used to clear the Routing switcher status on the next reboot. This has no immediate effect and any subsequent changes to Routing switcher status will also be cleared on the next reboot.
2E	Post Mortem command received. Critical errors will not cause a reboot.	The “post•mortem” command was received. This is used to tell the system to not reboot on a fatal error. The system tasks will be suspended so further investigation can be performed.
2F	Unsupported %s command received-ignored.	The system received an unsupported command. The system may be out of sync with the control center. The command is ignored.
30	Scheduling system reboot	Because the system is a high•performance system a requested reboot will be deferred till the system completes its high•priority tasks. This typically takes only a few seconds.

Table 16. Messages 31 to 38

Message Number	Short Message	Detailed Description
31	Scheduling configuration swap	Because the system is a high-performance system a requested configuration change will be deferred till the system completes its high-priority tasks. This typically takes only a few seconds.
32	Checking CRC of %s	This is an informational message indicating that the CRC of the specified file is being checked. This allows the system to ensure that no file corruption occurred.
33	%s is up to date	This is an informational message indicating the specified file is up to date and need not be reloaded to the system.
34	%s saved as %s	This is an informational message indicating that the specified file was downloaded successfully and renamed.
35	Downloading file %s	This is an informational message indicating that the specified file is being downloaded.
36	Cannot download file \"%s\" (Error number 0x%X: %s)	The file download failed. This is typically a critical error. Contact Grass Valley Technical support.
37	%s CRC failure, Computed=0x%04x Expected=0x%04x	The CRC on the downloaded file was not correct. This indicates a corrupted file. Contact Grass Valley Technical support.
38	Downloaded %s - %d bytes in %ld mS	The file download failed. This is typically a critical error. Contact Grass Valley Technical support.

Table 17. Messages 39 to 41

Message Number	Short Message	Detailed Description
39	%s CRC failure, Computed=0x%04x Expected=0x%04x	The CRC on the downloaded file was not correct. This indicates a corrupted file. Contact Grass Valley Technical support.
3A	Downloaded %s -- %d bytes in %ld mS	This is an informational message indicating that the specified file was downloaded (giving the byte count and the time required to download it).
3B	Configuration successfully loaded	This is an informational message indicating that the specified configuration was successfully loaded.
3C	Could not create UDP socket errno = 0x%x	There may be a problem with the LAN hardware or external LAN connections. This is typically serious. Contact Grass Valley Technical support.
3D	Could not shutdown UDP socket errno = 0x%x	There may be a problem with the LAN hardware or external LAN connections. This is typically serious. Contact Grass Valley Technical support.
3E	Could not close UDP socket errno = 0x%x	There may be a problem with the LAN hardware or external LAN connections. This is typically serious. Contact Grass Valley Technical support.
3F	Logical UDP port 0x%x overlaps standard port at 0x%x	Error trying to use a reboot or com port that is already in use via the Jupiter / BootP tasks. Check Jupiter com and boot port numbers.
40	Could not bind UDP socket for port 0x%x errno = 0x%x	There may be a problem with the LAN hardware or external LAN connections. This is typically serious. Contact Grass Valley Technical support.

Table 18. Messages 41 to 49

Message Number	Short Message	Detailed Description
41	Could not set option 0x%x on UDP port 0x%x errno = 0x%x	There may be a problem with the LAN hardware or external LAN connections. This is typically a serious problem. Contact Grass Valley Technical support.
42	Send failed for UDP port 0x%x errno = 0x%x ip = 0x%x	Unable to send a message to the UDP port at this IP address. The network may not be configured correctly or not physically connected correctly. Verify the correct UDP port numbers and IP addresses are being used.
43	Receive failed for UDP port 0x%x errno=0x%x	There may be a problem with the LAN hardware or external LAN connections. This is typically a serious problem. Contact Grass Valley Technical support.
44	Invalid UDP destination name '%s' on port 0x%x	There may be a problem with the LAN hardware or external LAN connections. This is typically a serious problem. Contact Grass Valley Technical support.
45	Error setting non blocking for port 0x%x	There may be a problem with the LAN hardware or external LAN connections. This is typically a serious problem. Contact Grass Valley Technical support.
46	Invalid logical multicast address 0x%04x	There may be a problem with the LAN hardware or external LAN connections. This is typically a serious problem. Contact Grass Valley Technical support.
47	Could not create '%s' task	There may be a problem with the LAN hardware or external LAN connections. This is typically a serious problem. Contact Grass Valley Technical support.
48	Could not create the virtual master array (step %d)	The virtual input master array (list of outputs that can be used as virtual inputs) was not created. The system will not be able to perform virtual input switching. (Step indicates where the process failed).

Table 19. Messages 49 to 50

Message Number	Short Message	Detailed Description
49	The virtual input master table is corrupt (cause %d)	The virtual input master array is corrupt. The system will not be able to perform virtual input switching. (The “Cause” text in the short message column will indicate where the corruption occurred).
4A	Cannot find any levels configured for this board (%d).	There are no levels configured for this board (CM-4400). You must build a valid configuration and then reboot the CM-4400.
4B	Bad config request: %s (task %x)	An improper configuration request was made. This is a programming error. Contact Grass Valley Technical support.
4C	Cannot load serial card for this board	Unable to load files for the coldfire serial card. Either the boot loader or serial processor application program failed to run on one or more serial processors. This indicates a failure of one of the serial processors. Contact Grass Valley Technical support.

Table 19. Messages 49 to 50 - (continued)

Message Number	Short Message	Detailed Description
4D	SerialTimeSync failed to set a serial processor time reference	A synchronize time command is sent to each serial processor. If the processor fails to set its time, this event is logged. The processor may also fail to load protocols if the synchronize time command fails. This indicates that the processor control channel is not responding.
4E	One or more serial protocols did not start correctly.	One or more of the configured serial protocols failed to load on one or more of the connected serial processors. This indicates a serial processor control channel failure or incorrect protocol module. Probable cause is a protocol defined on the serial protocols tables is not a valid protocol for this CM-4400.
4F	Serial processor watchdog expired on card %d.\nProcessor Restarted	The indicated serial processor failed to reset the hardware watchdog timer indicating that a hang condition existed on the processor. The processor was reset by hardware and its program will be restarted.
50	Error 0x %x scheduling actors for the router control device.	An error occurred when trying to schedule actors to the command scheduler. System may be over loaded. This is typically a critical problem. Contact Grass Valley Technical support.

Table 20. Messages 51 to 58

Message Number	Short Message	Detailed Description
51	Configuration error for router control device %d.	An error occurred when trying to get the logical CP number for this device. The device was configured in the protocols table but could not be found in the MPK devices table.
52	Error creating watch list for deferred events.	When a time-deferred switch is created a watch list observer is created so that the event handler will be notified when the event runs. Were not able to create the watch list observer. Possibly too many observers are being used.
53	Failed to allocate memory	The system tried to allocate memory but failed. This is always a fatal error. Contact Grass Valley Technical support.
54	Failed to free memory	The system tried to free memory but failed. This is always a fatal error.
55	Can't open configuration file \"%s\" (Error number 0x%X: %s)	There was a problem opening the configuration file.
56	Can't find configuration image \"%s\" (\"%s\").	The configuration image was not found in the configuration file. The old configuration image will be used (or the default if a valid one has not been loaded yet. Using this old configuration image will typically give undesirable results.
57	No Serial Ports defined.	No Serial Ports are defined in the configuration file. This message is just for your information. Define Serial ports if you are using serial control.
58	No Serial Protocols defined.	No Serial Protocols are defined in the configuration file. This message is just for your information. Define a Serial Protocol if you are using serial control.

Table 21. Messages 59 to 60

Message Number	Short Message	Detailed Description
59	Cannot swap to alternate configuration image \"%s\", it is not valid.	A swap was attempted on the configuration image but the alternate image was not valid. The old image will continue to be used. This may give undesirable results.
5A	Cannot get the Ethernet address for this board.	The Ethernet address is needed to determine which configuration to load. If the configuration file cannot be determined, the board will not operate. This is always a fatal error. Contact Grass Valley Technical support.
5B	Cannot find this board number (%u) in the configuration table.	Each board has a unique number. This number is used to determine what configuration parameters are to be used. If the parameters for the board cannot be found, then the old configuration will be used. This will usually produce undesirable results.
5C	Serial Processor: Out of memory!	When the serial card's memory heap is completely exhausted this message is logged and the task of allocating memory hangs.
5D	Serial Processor: Heap nearly exhausted!	When the serial card memory heap is nearly exhausted this warning message is logged.
5E	Serial Processor: Heap Free error!	When memory on the serial card is freed the currentHeapUsed value is decremented by the size of the block being freed. If the current used value is negative, there is a problem with the heap memory management and this error is logged.
5F	Serial Processor: Message transfer during last frame failed to complete. Determinacy of incoming messages lost.	This message is logged when processing input messages if a message failed to be completely transferred in the previous frame. It represents a determinacy error. Increments a serial input channel determinism error metric.
60	Serial Processor: DPM access failure. The system was unable to write serial messages.	When processing input messages if unable to allocate DPM memory to write into, this message is logged. Increments a serial input dpm access error metric.

Table 22. Messages 61 to 68

Message Number	Short Message	Detailed Description
61	Serial Processor: Message transfer during last sync interval failed to complete. Determinacy of outgoing messages has been lost.	When processing output messages if a message failed to complete in the last frame this message is logged. this message represents an error determining an output.
62	Serial Processor: Message overflow. Outgoing message lost.	When outputting serial messages to the frame processor the serial card ran out of memory and was unable to copy any more messages.
63	Serial Processor: Data overrun error. A separate thread is watching all the port metrics over run error counts.	When any ports overrun error count exceeds its previously logged count this event is logged.
64	Serial Processor: Serial Card Flash Directory Initialized.	When a new board is installed this event is expected. Anytime after initial installation if this event happens the flash file system directories have both been corrupted and were re-initialized.

Table 22. Messages 61 to 68 - (continued)

Message Number	Short Message	Detailed Description
65	Serial Processor: Primary directory copied from the secondary directory.	When the primary directory was checked it indicated a data corruption problem and was replaced by the secondary directory copy because its contents checked OK.
66	Serial Processor: Update Flash Directory write Dir failed to write directory	The flash file system attempted to update the directory in memory but the write to flash failed for the primary directory copy 1 or secondary directory copy 2.
67	Serial Processor: Serial Port Error	A separate thread is watching all the serial port metrics error counts. This event is logged when any ports line, protocol, or timeout error count exceeds zero or its previously logged value.
68	Serial Processor: Frame processor failed to ACK serial message before timeout	When a message comes from a serial port protocol it is transferred from the serial processor to the frame processor to be processed by the system. The protocol expects to receive either a positive or negative acknowledge. If that response is not received within the specified timeout period this event is logged.

Table 23. Messages 69 to 70

Message Number	Short Message	Detailed Description
69	Serial Processor Undefined: %s	Undefined serial processor log event. See message string.
6A	Cannot run unit test for %s with production code	You cannot run unit tests when the code is compiled for production.
6B	Could not create unit test task for %s	Failed to create the unit test task.
6C	Could not create unit test cleanup task for %s	Failed to create the unit test cleanup task.
6D	Unable to initialize the bootp information. Activate a valid configuration and start the bootp daemon.	The application was unable to initialize the bootp information. The AccuSwitch application could not determine its IP address. Make sure a bootp server is running and a valid configuration is activated.
6E	Unable to initialize the control center. Activate a valid configuration and start the bootp daemon.	The application was unable to initialize the bootp information. The AccuSwitch application could not find a valid configuration file. Make sure a bootp server is running and a valid configuration is activated.
6F	Unable to initialize Configuration Upload.	The application was unable to initialize the Configuration Upload.
70	Can't find host name for %s in host table.	A host name was specified without an IP address. The host name was not found in the hostname table. This time server will be inactive.

Table 24. Messages 71 to 78

Message Number	Short Message	Detailed Description
71	Can't add host name for %s to the host table.	A host name was specified with an IP address. An attempt was made to add the host name to the host-name table. This error shouldn't affect operations.
72	%d deferred events for %s:%02d reassigned for makeup.	A timeline discontinuity has caused deferred events to be passed over for execution. Since these events now exist in the past, the system will attempt to perform these events as the current schedule permits. This error is evidence of a serious problem with the system video timeline. It may be caused by an abrupt change to the Timecode input or a problem with video SYNC. Check to make sure the Timecode input and video SYNC are working and properly connected. If the time on the Timecode generator was adjusted, make sure that these changes do not occur if there are deferred events pending that may be swallowed by the adjustment.
73	Can't create CRC directory %s. %s CRC not stored.	The CRC directory to store system file CRCs could not be created. The system will continue to function properly without this directory but reboot times will take approximately 3-4 seconds longer.
74	Can't create CRC file %s. %s CRC not stored.	The CRC file to store a system file's CRC could not be created. The system will continue to function properly without this file but reboot times will take approximately 3-4 seconds longer.
75	Directory %s does not exist...creating it.	This message is for informational purposes only and does not affect system operation.
76	File %s does not exist...creating it.	This message is for informational purposes only and does not affect system operation.
77	Can't close directory %s.	An unsuccessful attempt was made to close a directory on the storage device.
78	%s: %s file write error, expected %d bytes, wrote %d bytes.	An attempt to write data to a file was unsuccessful.

Table 25. Messages 79 to 7E

Message Number	Short Message	Detailed Description
79	%s: %s file read error, expected %d bytes, read %d bytes	An attempt to read data from a file was unsuccessful. Contact Grass Valley Technical support.
7A	%s: Storage Media Unavailable	The requested Storage Media is unavailable. This is a Fatal error that indicates a system resource failure. Contact Grass Valley Technical support.
7B	%s: Can't access file %s	An attempt to open the specified file was unsuccessful. Contact Grass Valley Technical support.
7C	ERROR: %s (errno=0x%x, %s)	Some system error occurred. This is usually a Fatal error. Contact Grass Valley Technical support.

Table 25. Messages 79 to 7E - (continued)

Message Number	Short Message	Detailed Description
7D	The number of configured levels are: %d, The MAXIMUM levels allowed per CM-Board is: %d.	The configuration set is configured with more levels than this system can support. Contact Grass Valley Technical support.
7E	Serial Router Queue full Physical Level %d.	The serial Routing switcher queue if full, switches being sent too fast for the serial remote Routing switcher. Contact Grass Valley Technical support.

Startup Codes

Table 26. Startup Codes

Code	Description
00	Advance to next code in sequence
01	Starting up the system
0B	Initializing the bootp client
0C	Initializing the control center client
10	Initializing the time keeper
20	Initializing the router status
28	Initializing the switch processor
30	Initializing the router switcher
40	Releasing application tasks to run

Shutdown Codes

Table 27. Shutdown Codes

Code	Description
E0	Shutting down the system
E4	Suspending applications tasks
E8	Abdicating control to slave board
EC	Shutting down serial ports
F0	Saving router status
F4	Closing the switch log
F8	Closing the event log
FF	The system is stopped

Other Codes

Table 28. Other Codes

Code	Description
DE	A critical disk error occurred
B4	Begin boot code in usrRoot
B3	Boot code count down begin console init
B2	Boot code count down begin pcmcia init
B1	Boot code count down begin mux init
BE	Boot code error in mux lib
B0	Booting or running in boot command loop

Section 12

Jupiter ASCII Communications Protocol

Overview

Hardware connections for an external computer are shown in Figure 38 on page 75.

The set-up procedure in the Jupiter Control System File Server includes defining one or more ports as being ASCII in the Serial Protocol Table (See *Configurator Application* on page 109).

The control computer is identified on the MPK Devices table. You will need to define each port by selecting the Serial option from the Device Type column. You must also assign each port a CP Input set, CP Output Set and CP Level set. These sets will determine which levels, inputs, and outputs are available to each ASCII port to control and status.

The ASCII Computer Interface is assigned to a system controller port and uses a simple ASCII data format. The serial protocol will use the following default settings:

- 9600 Baud
- 8 Data Bits
- No Parity
- 1 Stop Bit

Baud rates of 2400, 4800, 19.2K and 38.4K are also user-configurable from the Jupiter Control System File Server. The control port uses XON (0x11) and XOFF (0x13) to control command pacing if necessary.

ASCII Data Format

The ASCII data format must have the following characteristics:

- All commands are in upper case ASCII.
- Space (0x20) characters are optional and will be ignored.
- Each command is followed by a carriage return (0x0D).
- If a line feed (0x0A) is included it must follow the carriage return.

ASCII Commands

The controlling computer must wait for a `ZY` or `ZN` response after each command before attempting to send a subsequent command. Failure to do so will result in a `ZN` response, and possibly an `XOFF` condition (see Table 29 on page 274 for more information about commands). If switcher status is received, wait for all levels to apply status before sending another command.

The following tables are intended to help you understand the ASCII commands:

Table 29. Command Descriptions

Command	Description
OOO	Router Switcher OUTPUT. This corresponds with the "Selection" number defined in this ASCII port's CP Output Set. The range is from 000 to 999. (Previous releases had a range from 000 to 249.)
III	Router Switcher INPUT. This corresponds with the "Selection" number defined in this ASCII port's CP Input Set. (Previous releases had a range from 000 to 249.)
LLLLLLL	Router Switcher LEVELS. This corresponds with a logical position in this ASCII port's CP Level Set. The range is from 1 to 7. For example, 1 refers to the first entry in the CP Level Set, and 5 refers to the fifth entry in that same set. If no levels are specified, then the take is assumed to apply to all levels defined in that set. Level number entries are NOT position-dependent.

Table 30. General Purpose ASCII Commands

Command	Meaning	Description
ZA	Acknowledge	This command is used to see if the ASCII interface exists and is running. A response of ZA is returned whenever a ZA is received.
ZZ	Reset	This command forces the ASCII controller to reset. This causes the interface to cancel all previous ZP, ZV, and ZW commands. A ZX response is returned to the external computer upon command completion. This ZX is also returned whenever the interface is manually reset.

Table 30. General Purpose ASCII Commands

Command	Meaning	Description
ZY	Command Accepted (ACK)	This response is returned after the serial port has successfully parsed the command and in the case of a switch command has successfully issued the TAKE to the system and received a switch response back from the system. This does NOT mean that the command was successfully executed. The remote computer should not issue a new command until receiving a ZY or ZN from the current command. The amount of time for the response will vary depending on system complexity and current system activity. Also the number of switches involved in the command will affect the amount of time it takes to receive the ZY response. Multiple switches sent in one command may result in ZR response(s) being returned before the ZY response.
ZN	Command Rejected (NAK)	A ZN will be issued when a condition occurs where the current command cannot be executed. A ZN response can be issued for several reasons such as an invalid command, an invalid command format, or an invalid input, output or level. Invalid inputs, outputs and levels are logged to the system logger. Also if the system is busy a ZN will be issued followed by XOFF. When it is again ready for the next command a XON will be issued. Note that after the XON, response(s) from the prior command may be issued (for example, ZR response).

Table 31. Router Switcher Control and Status Commands

Command	Meaning	Description
ZSOOOIIILLLLLLL	Switch Request	This command causes the interface to issue a TAKE Switch Request to the routing switcher control system and affects a single routing switcher output. If no levels are specified, then ALL defined levels are assumed. **Note** Passwords are not honored by automation protocol handling. A remote computer can send a command with multiple Switch Requests (older releases do not have this capability). A single command can be up to 180 characters long which allows switching of from 12-22 outputs (depending on the specified levels). An example of a multiple Switch Request follows: `ZS00000112ZS00100212ZS00200312<CR>` This example command would switch outputs 0, 1, and 2 on levels 1 and 2.
ZROOO	Status Request	This command requests current switcher status for a single output. The response is in the format: `ZROOOIIILLLLLLL` If the status for the output is “split”, multiple responses will be returned.
ZWOOO	Watch Output	This command causes the interface to watch the specified output for any changes and report such changes. A request to watch output “999” is a request to watch all defined outputs in that port’s serial output set. All responses are in the “ZR” format described above. When issued, this command also may result in an immediate ZR response for the requested output(s). No ZR response(s) will be returned if the requested output(s) do not have any inputs assigned to them.
ZPOOO	Lock Output	This command LOCKS the specified output from being changed by any system control device.

Table 31. Router Switcher Control and Status Commands

Command	Meaning	Description
ZV000	Protect Output	This command PROTECTS the specified output from being changed by any other system control device.
ZU000	Unlock Output	This command removes the LOCK or PROTECT from the specified system output. If another system control device or interface locked or protected this output, this command will fail.
ZJ000	Report Lock Status	This command will return a code based on which kind of system control device or interface LOCKED or PROTECTED the specified output. If the output is not locked or protected, no response will be sent. The response codes are as follows: ZJ000: Jupiter Control Panel ZJ001-004: Party Line Control Panel ZJ999: THIS ASCII INTERFACE **Note** Lock status returned for the first level only in the CP Level Set for this ASCII port.

Appendix A

CM-4400 Specifications

Note Some functions identified in this appendix are extra-cost options.

Electrical

CM-4400 Control Module

Front panel controls:

- Activate
- Reset
- Video output: Up, Down, Next, Select

Note The Video output is not an AccuSwitch feature. AccuSwitch does not support VGA

Front panel indicators:

- Power supply status (+3 V, +/-5 V, +/-12 V)
- Active
- System status (7-segment LED)

Front panel connections

- 1, serial (diagnostic) (9-pin D female)

Rear panel connections

- 1, Video Out (VGA) (15-pin HD female)
- 1, SMPTE Time Code In (XLR female)
- 1, Sync (reference), 1 V P-P to 4 V P-P, looping (BNC)
- 1, Alarm (SMPTE 269M-1999)
- 8, Serial Ports (RS-422/ESbus) (9-pin D female)†
- 1, Redundant (control) (15-pin D female)
- 1, Grass Valley Routing switcher Crosspoint (XPT) bus, looping (15-pin D female)
- 1, LAN (10/100baseT) (RJ-45)

Power requirements: 100 to 240 VAC 50-60 Hz auto ranging, 0.4 A

Environmental: Operational range, 0 to 40 degrees Celsius. Humidity (non-condensing) 95% max.

Matrix Routing Switcher Control Buses

Matrix Routing switcher bus controller: CM-4400 System Controller

Protocols supported:

Crosspoint (XPT) bus

Cable/connectors: 10-conductor twisted pair plus ground / 15-pin D

Routers supported:

- Apex
- Concerto (with CRS-MC-C2 Controller Module)
- GS 400
- Mars
- SDR 400
- Trinix
- Venus
- 8 Serial ports, each port is capable of controlling a different third-party router or Grass Valley Routing switcher (That is, Acapella or Horizon protocol controlled router).

Power requirements: 117/220 VAC, 0.25/0.125 A

File Server Minimum Specifications

Ensure that the Grass Valley PC 3000 System or the Customer -supplied File Server has the following minimum requirements before installing the AccuSwitch application:

- Windows XP Pro SP2 or Windows 7 Professional (English versions)
- 2 GHz Pentium processor
- 1 GB of RAM
- Minimum of 13 MB disk space for each application
- 1.2 Gigabyte hard drive
- 4X CD-ROM drive
- Intel or 3Com Ethernet LAN card
- Keyboard / mouse
- 15-inch monitor capable of 1024x768x256
    - A minimum resolution of 1280 X 1024 and 32 -bit color PC monitor setting is recommended for proper display of the Soft Panel screens.
- 2 serial ports and 1 parallel port
- A Site License is required to enable features.

Software Required

Installation of the Jupiter 7.9.1 release is only supported using the English version of Windows XP Professional SP2 or Windows 7 Professional. Windows Firewall and any Anti-Virus Firewall must be disabled to allow the Bootp, TFTP, and JNS applications to operate properly.

A Site License is required to enable features; see Ordering Information (page 1-22).

Jupiter software is installed and tested.

If circumstances require a customer-supplied computer, ensure that it meets the minimum requirements listed above under *File Server Minimum Specifications*.

Equipment Dimensions

CM-4400 System Controller

1.75 in. high x 19 in. wide x approximately17 in. deep (44 x 483 x 432 mm)

CB 3000 Control Buffer

1.75 in. high x 19 in. wide x 16.75 in. deep (44 x 483 x 425 mm)

PC 3000 File Server

Dimensions are typical for a desktop PC. For exact measurements of file server currently supplied with Jupiter systems, please contact Grass Valley.

System Limitations

Maximum Number of Logical Levels

The system-wide maximum number of logical levels is 96. However, the actual number of levels a CM-4400 can control in a particular system varies.

Figure 228. PMEM Memory Usage Example

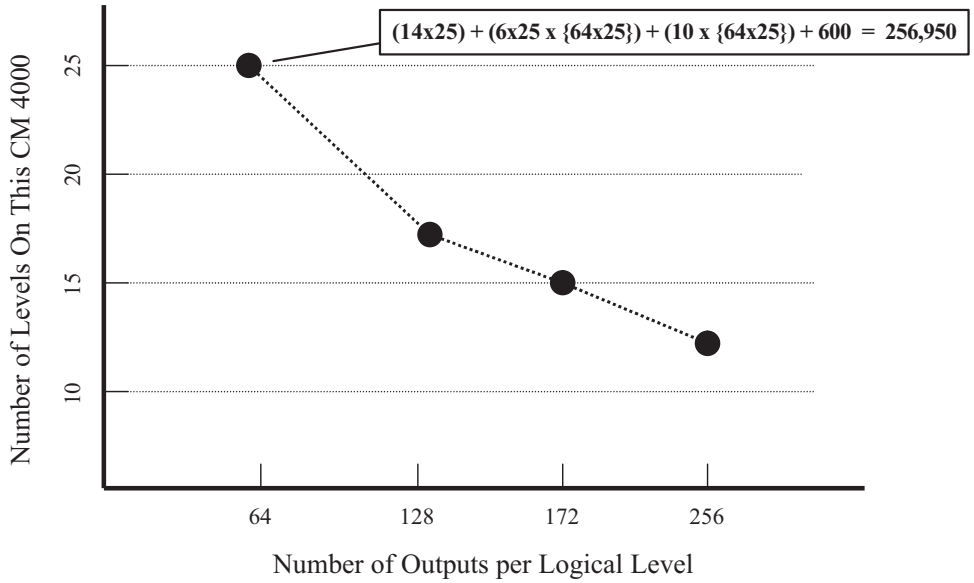

It is easy to see that if the logical levels in the Jupiter system consist of small routers with few outputs per logical level, more of these levels can be controlled by a single CM-4400. However, if the Jupiter system consists of larger routers, fewer of these levels can be controlled by a single CM-4400, and the system's Routing switcher control must be distributed among multiple CM-4400s.

Jupiter versions prior to 5.1.0 will not handle edit sets that have more than 64 levels. Should you attempt to edit such a set, the Jupiter Configurator (editor) will detect the error in the Switcher Description table and will not run correctly. Another symptom is that the Configurator will not exit prop-

erly. (If you mistakenly do edit a set with more than 64 levels with a pre 5.1.0 version of Jupiter, terminate the Configurator, delete the invalid set from the C:\Program Files\Thomson\Jupiter\config directory, delete the ics_conf file, and restart the Configurator.)

CM-4400 Serial Bus Loading

Recommendations for the maximum number of devices per bus and processor board.

The following guidelines can be used during system planning or as a part of a troubleshooting process. In the case of an installed system, an existing configuration set can be analyzed automatically using the loading program (loading.exe) available at Grass Valley's Support/FAQ web site.

Fixed Load Factors: CM-4400 supports 128 Serial panels and 64 LAN panels.

Calculating Loading

When you are calculating the load of the device consider the following:

- A maximum of sixteen devices may be assigned to an addressable controller port.
- Only one ASCII protocol device or ESswitch device can be connected per port.

Follow these steps to calculate load and the required number of processors:

1. Sum all base and fixed loading factors in the system.
   - The system is considered a "lightly" loaded system if the system wide sum of all base and fixed loading factors is less than 160. Abase multiplier of 1.0 should be used in later calculations.
   - The system is considered a "medium" loaded system if the system wide sum of all base and fixed loading factors is greater than or equal to 160 but is less than 320. A base multiplier of 1.5 should be used in later calculations.
   - The system is considered a "heavy" loaded system if the system wide sum of all base and fixed loading factors is greater than or equal to 320. A base multiplier of 2.0 should be used in later calculations.
2. Using the base multiplier that is specified above based upon the system wide sum of the base and fixed loading factors, distribute the devices throughout the system. Do not exceed 200 devices which is the maximum load for the CM-4400 processors.

Note The base multiplier is based upon the sum of the device counts of all devices system wide, NOT upon the devices on any single processor board. Therefore, if the system widesum of the device count is 400, you must use a base multiplier of 2.0 when configuring the system. You can not merely sum the devices connected to each individual processor using a base multiplier of 1.0 and keep this sum under the specified maximum loading.

Calculating Loading Example

A system is to contain the following:

- 2 channels of Saturn (1 DVP, 2 DAPs per channel). (Saturn Video and Audio Processors do not directly contribute to Jupiter loading)
- 1 Saturn MCC 3500 Master Control Console with the Select panel used for delegation purposes. (Saturn MCC 3500 panels do not directly contribute to Jupiter loading unless the Select panel is used with a backup switcher)
- 1 Saturn DVE (Sony serial machine protocol)
- Venus router control
- 1 Triton remote router control
- 1 ASCII
- 1 ESswitch (high switch rate)

Since the sum of the base and fixed load factors of all devices in the system is greater than or equal to 320, this would be considered a heavily loaded system. Therefore, the indicated Base Multiplier (BM) would be 2:

Table 32. CM4 Possible Configuration

Board	Description	Loading	Totals
CM4	8 Serial Machines	8X8 (FLF)	64
		Total =	64

Supported Data Routers

CM-4400 controllers running the AccuSwitch application will support two data router models:

- Venus data routers with DM-400B Data Matrix boards, and
- Concerto data routers.

In addition, AccuSwitch will now support path finding (tie line operation) between any combination of Venus DM-400B and Concerto data routers, up to a maximum of three routers.

Appendix B

Connecting Legacy and 3rd Party Routers

Matrix Router Control Buses

Supported Protocols

Super crosspoint bus: Grass Valley binary cable/connectors are 10-conductor twisted pair plus ground/15-pin D. Transmission speed: approximately 1 Mbit/sec.

Automation Interface Protocols

Jupiter ASCII

Jupiter ESswitch

SMPTE ES tributary (EG 29-1993)

SMPTE ESLAN (EG 30-1995)

SWP-08

NO (Native Protocol Control Board Type)

Supported Routers

Apex

Concerto (with CRS-MC-C2 Controller Module)

GS 400

Mars

Trinix

Venus

Serial Control Routing Switcher Protocols

Alpha Image

Data Tek

GVG Native (outgoing)

Nexus

Pro-bel Eclipse

Utah 96

EScontrol

Utah 12

Nexus Star

GVG Horizon

SWP-08

Support for Wild Card Characters in the ES LAN Protocol

Wild card characters can be used when retrieving Source, Destination, and Level names using Automation. Now, you can retrieve all the source or destinations mnemonics if you enter “0xff” for the level, source, or destinations.

This feature follows the SMPTE protocol; Grass valley recommends that you refer to this protocol for more information.

Physical IO Limits

The Physical IO limits have been changed from 4096 to 8192 for all remote drivers. This change does not affect Xpt (Crosspoint) bus drivers. For example, the Binary, Bin Confirm All, and DM400B driver options.

Triton Systems

Note The CM-4400 connected to the Triton Routing switcher must be configured using the Network Description table (page 151) and Serial Protocol table (page 153).

Triton configuration is similar to that for other routers, beginning with the Switcher Description table (page 157). From that point, switcher inputs, outputs, a CP Level Set, and CP input/Output Sets must be defined.

Triton routers are connected using a CM-4400 serial port. Multiple Triton chassis can be connected to a single CM-4400, but only if all the routers are connected using the same MIDI bus and connected through the same single serial port. If more than one Triton MIDI bus is needed, the switchers on that bus must be connected to another CM-4400.

The serial connector on Triton routers is a 9-pin RS-232 signal level port. Since the CM-4400 uses RS-422 ports, a RS-422 to RS-232 converter must be used to ensure reliable communications. Figure 229 on page 285.

Figure 229. CM-4400 Connected to Triton Distribution Switchers

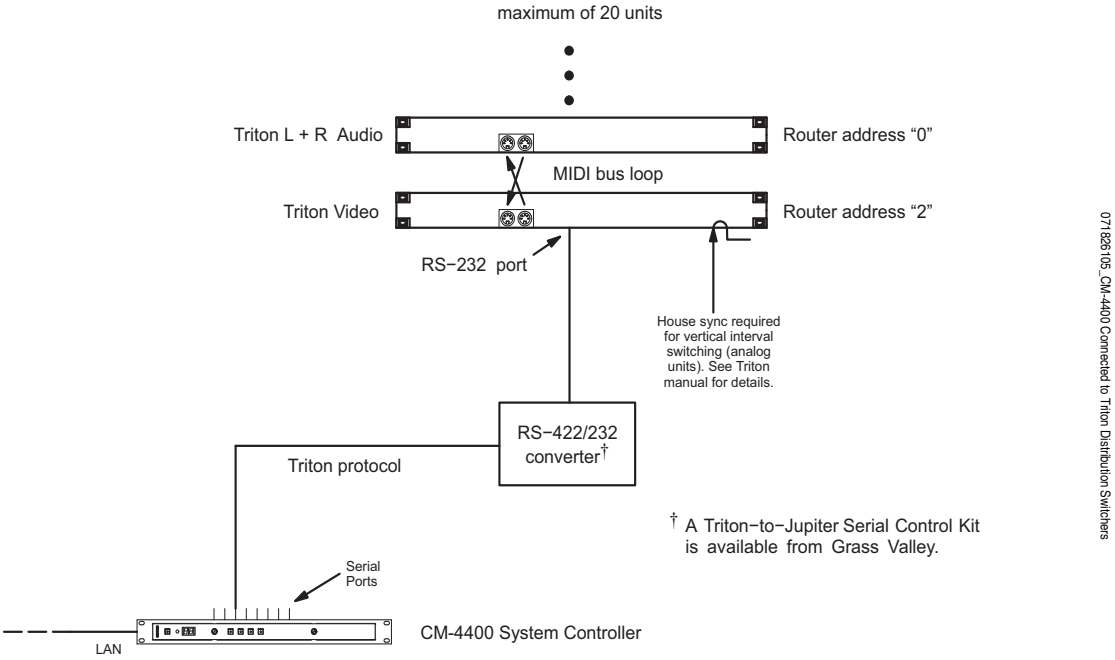

A Triton-to-Jupiter Serial Control Kit, which is available from Grass Valley, includes a B&B Electronics 422COR RS-232/RS-422 Converter, a B&B Universal Power Supply, a 25 ft. (7.6 m) VM/CM to Converter Cable, and a 5 ft. (7.6 m) Converter to Triton Cable.

Multiple Triton switchers are connected with a MIDI bus loop (as detailed in the Triton manual). In a typical video/audio switching application, each chassis is set with a unique Router Address from 0 to 15 (DIP switches 1-4 on the rear panel). Split switching is possible, but only between chassis. For example, Audio Left/Right can be split from Video, but Audio Left cannot be split from Audio Right.

In RGB or YUV applications where all three signals must always switch together, the Router Address should be set to the same value on each chassis. Up to 20 chassis can be connected in one MIDI loop.

Some Triton switchers have front-panel controls. These controls will operate normally when the Routing switcher is connected to a Jupiter system but Jupiter 6.0 and after software is required in order for Triton status to be indicated on Jupiter panels.

All RS-232/422 connections should be complete and all MIDI bus loop connections should be made and terminated at the originating device before applying power to the Triton Routing switcher.

In order for a Triton analog video router to switch on Vertical Interval as set in the Switcher Description Table, rear-panel DIP 7 must be DOWN and a sync reference signal must be connected to Input No. 1. The reference signal must be composite video, 1 Vpp, 300 mV sync, 75 ohms. For more information, refer to the Triton manual.

Figure 230. Cables for Connecting CM-4400 to Triton RS-232 Port

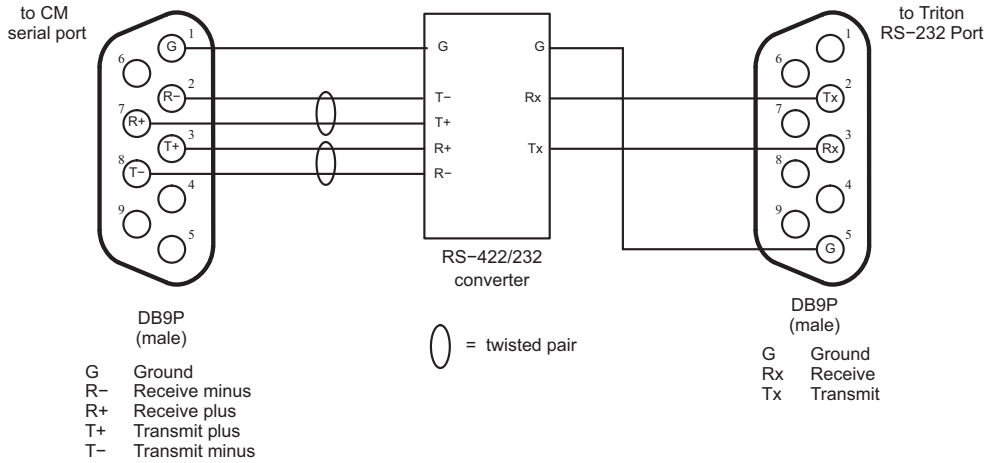

SMS 7000 Connections

Note The CM-4400 connected to the SMS 7000 must be configured using the Network Description table and Serial Protocol table.

The Routing switcher must be defined on the Switcher Description table. From that point, switcher inputs, outputs, a CP Level Set, and CP input/Output Sets must be defined.

The CM-4400 can be connected to a Grass Valley SMS 7000 Signal Management System and Routing switcher (Figure 231). The protocol setting is: 38400 baud, 8 data bits, no parity, and 1 stop bit.

The serial cable on the back of the SMS 7000 controller frame may be labeled RS-232, but it can and should function as RS-422 if configured in software. The CM-4400 is connected to one of the DB25 or DB9 ports on the back of the SMS 7000 controller frame. Refer to the manual supplied with the SMS 7000 for instructions on setting the port up for RS-422 and setting the serial parameters.

Figure 231. Connection to SMS 7000 Control System

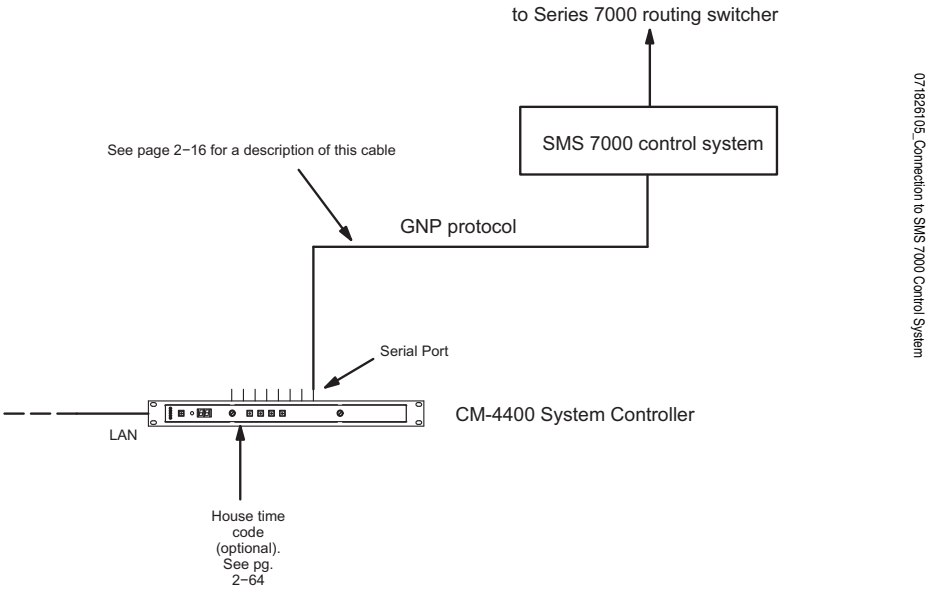

Figure 232. Cable for Connecting CM-4400 to SMS 7000 DB9 Port

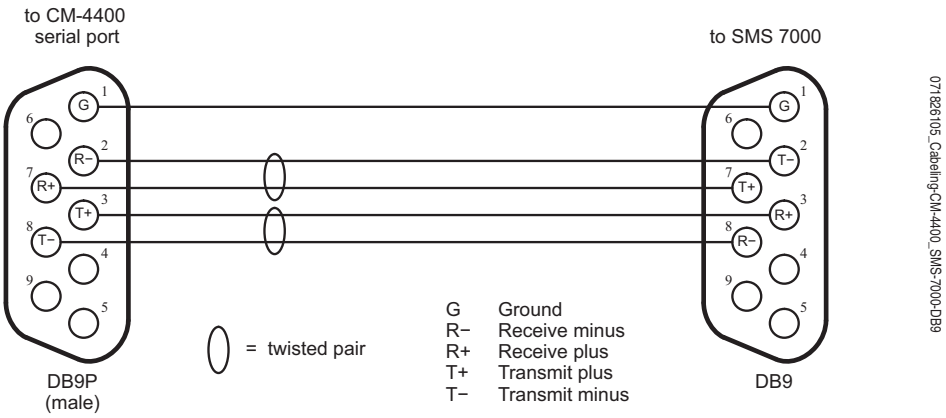

Figure 233. Cable for Connecting CM-4400 to SMS 7000 DB25 Port

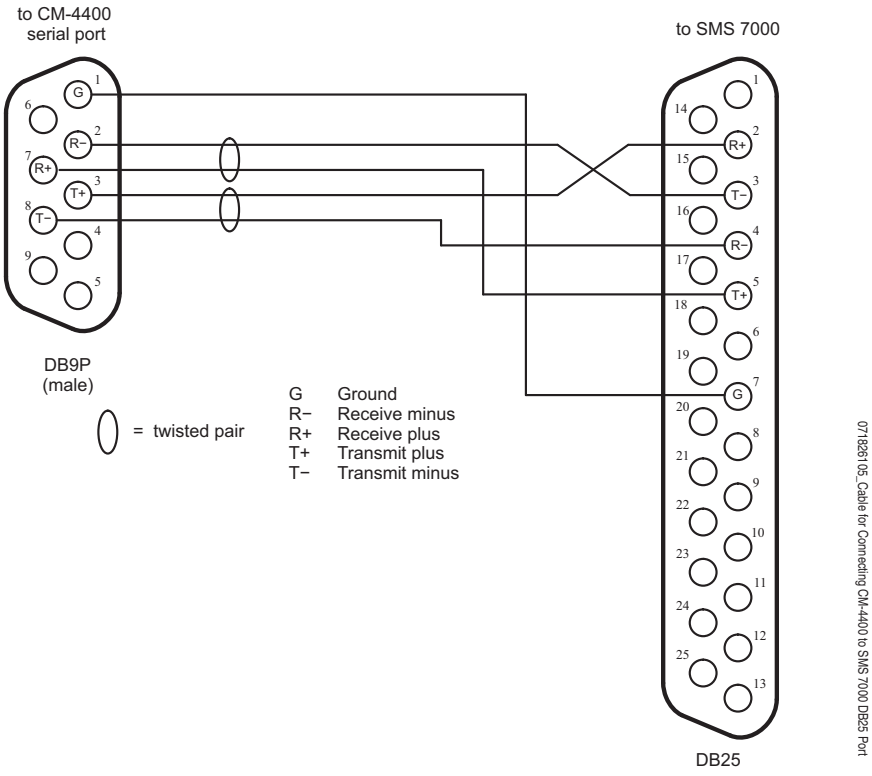

Horizon Matrix Routing Switcher Connections

The CM- 4400 can be connected to a Horizon matrix Routing switcher through the General Purpose Interface with Terminal/Computer Interface software (GPI-T/CI) (see Figure 234). The protocol for the GPI-T/CI RS-422 port must be set at: 38400 baud, 8 data bits, even parity, and 1 stop bit (refer to the *Horizon GPI-T/CI Manual* for configuration instructions).

Figure 234. Connection to Horizon Matrix Router

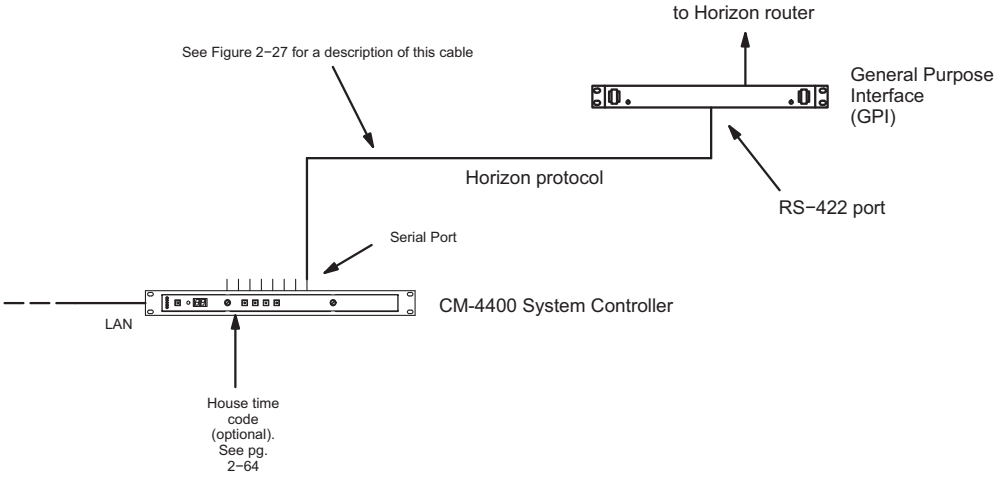

Figure 235. Cable for Connecting CM- 4400 to Horizon Matrix Router

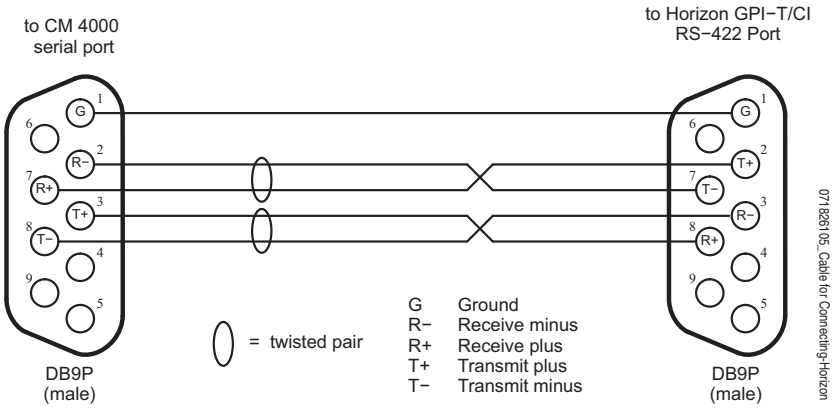

Datatek D-2000/2166 Connections

The CM- 4400 can be connected to a Datatek D-2166 Buffer Control Module, which in turn is connected to a D-2000 Series routing switcher. The protocol setting is: 38400 baud, 8 data bits, even parity, 1 stop bit.

Although the CM- 4400 is connected to one of the D-2166 Buffer Control Module ports labeled “RS-232,” the port must be set with an internal jumper to operate according to RS-422. Refer to the manual supplied with the D-2166 for more information.

Figure 236. Connection to Datatek D-2166 Buffer Control Module

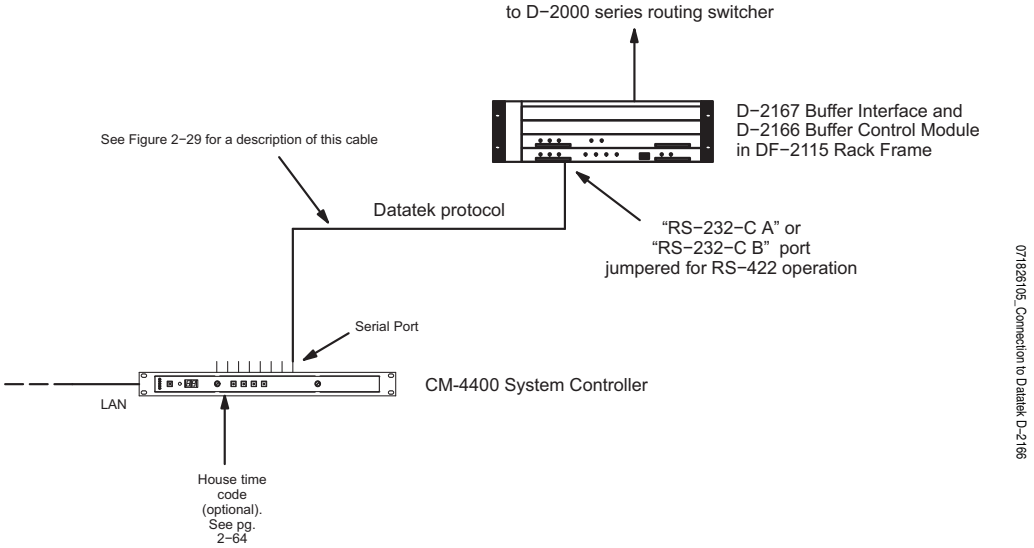

Figure 237. Cable for Connecting CM- 4400 to Datatek D-2166 Buffer Control Module

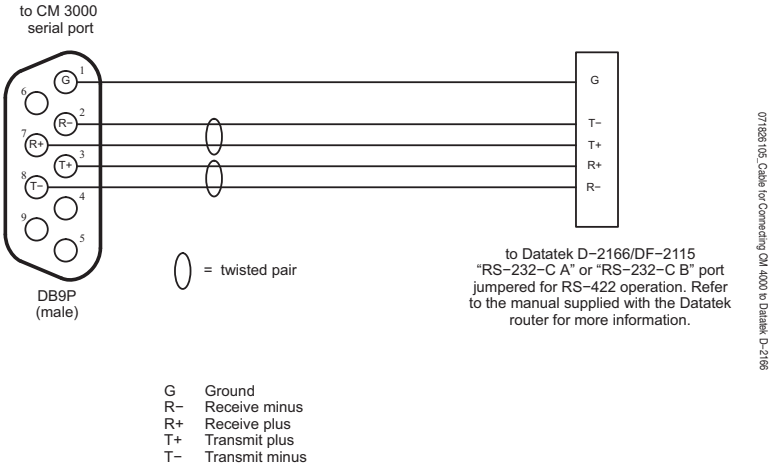

Utah Scientific Party Line Connection Using UDI-1B

The CM- 4400 can be connected to a Utah Scientific Party Line through a UDI-1B Universal Data Interface (see Figure 238). Some UDI-1B units are equipped with a 9-pin RS-422 port; others are equipped with a 25-pin RS-232 port. Either type can be used.

The protocol for the UDI-1B port must be set at: 9600 baud, 7 data bits, even parity, and 2 stop bits. The UDI-1B must be equipped with software version 81.4 or later. The UDI-1B "AUX" rotary switch needs to be set to "E" for "PL-160 Mode" and to enable all mode commands. Refer to the UDI-1B manual for detailed procedures.

Note If the RS-232 port is used, it is advisable to use an RS-422 to RS-232 converter. A Black Box, model GJ-IC455B Interface/converter, is available from Grass Valley.

Figure 238. Connection to Utah Scientific Party Line

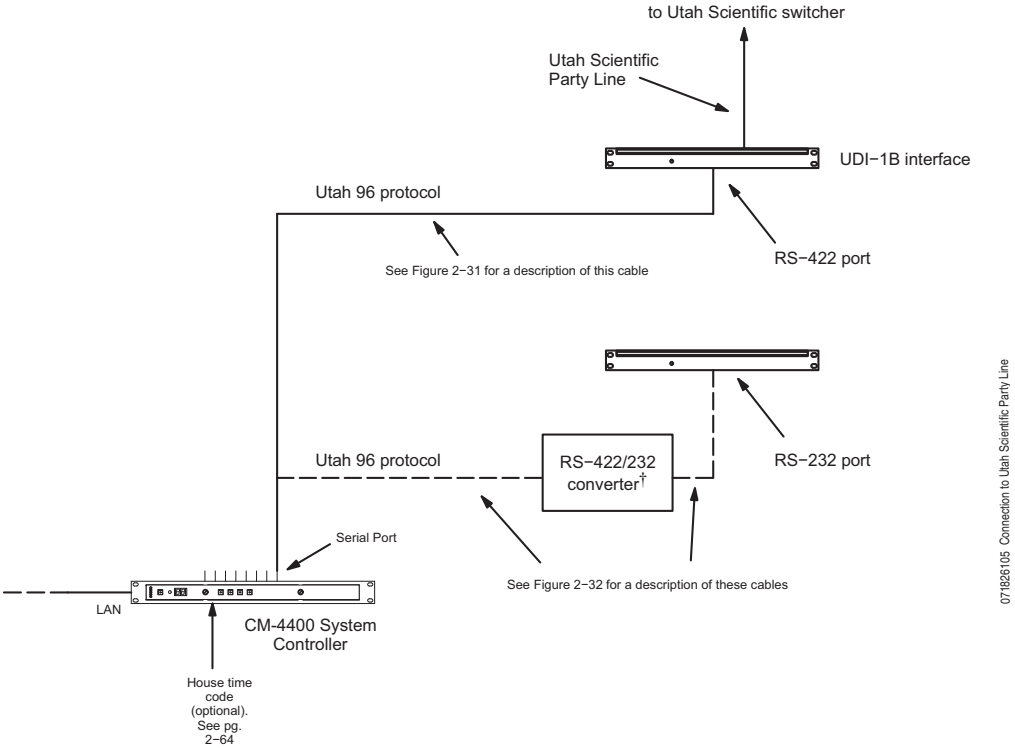

Figure 239. Cable for Connecting CM- 4400 to UDI-1B RS-422 Port

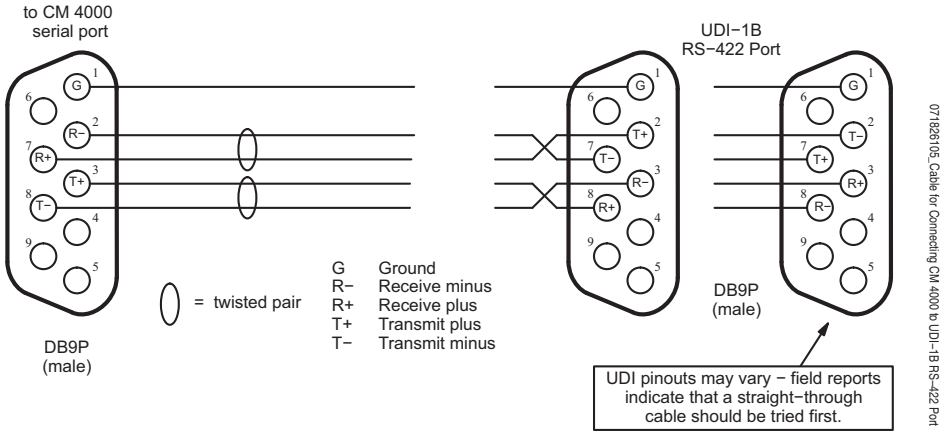

Figure 240. Cables for Connecting CM- 4400 to UDI-1B RS-232 Port

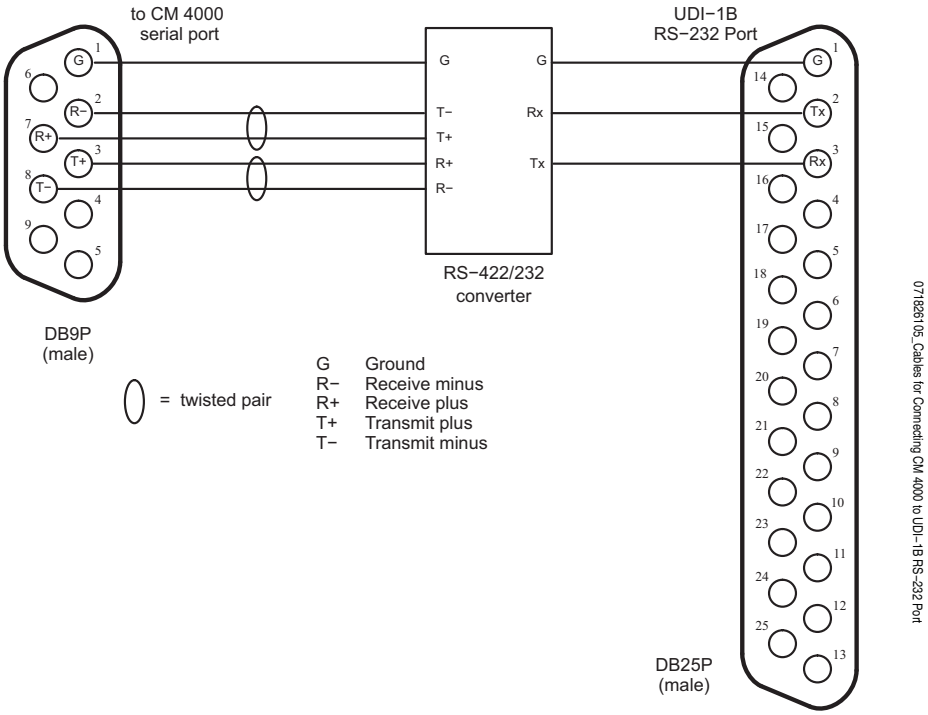

Nexus Audio Routing System

Nexus audio routers can be controlled using the hardware connections shown in Figure 241. The Nexus switcher requires special PROMs for this application (please contact Grass Valley for more information).

Figure 241. Connection to Nexus Audio Router

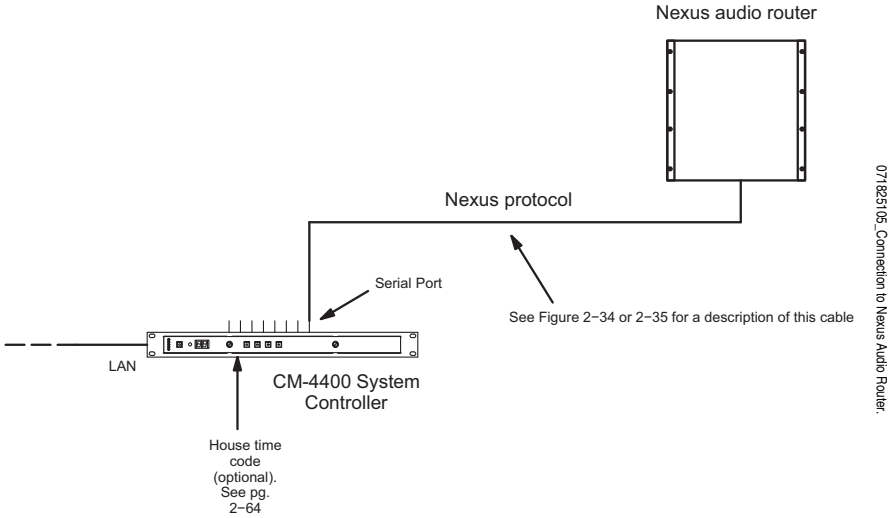

The Nexus router has two ports that can be used for connection to Jupiter: the “XCI” port and the “XCPU” port. Grass Valley suggests that the XCI port be used if possible. The pinouts for both ports are shown below.

Figure 242. Cable for Connecting CM- 4400 to Nexus Audio Router XCI Port

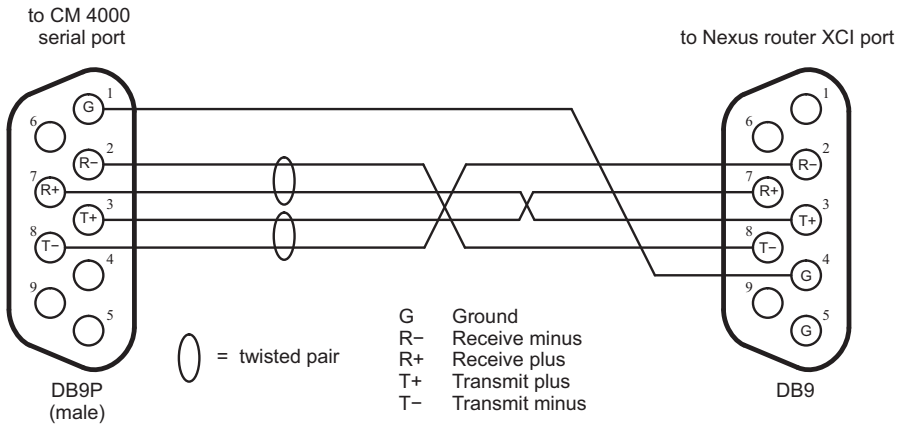

Figure 243. Cable for Connecting CM- 4400 to Nexus Audio Router XCPU Port

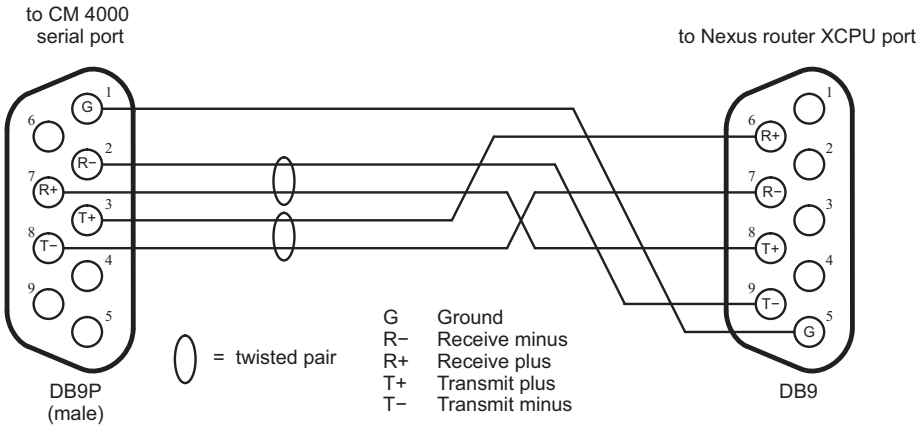

Pro-Bel SW-P-08 Protocol

The 8.0 version of the Jupiter system supports two new protocol drivers, for AccuSwitch, that implement parts of the Pro-Bel SW-P-08 protocol. The first driver is implemented as a standard Remote Router control interface. The second driver is implemented as an Automation or a Control panel interface. The 7.9.1 version of the Jupiter system supports two improved protocol drivers, for AccuSwitch, that implement parts of the Pro-Bel SW-P-08 protocol.

The following improvements have been made:

- The SW-P-08 remote router protocol will not allow data to be sent from the inactive board.
- The SW-P-08 protocol driver type has been added to the Switcher Description table's list of drivers that are not refreshed.
- Protects from the protocol will protect AccuSwitch. No Lock or Protect will be sent to the protocol. However, the function will be similar to a lock because the panel id will not allow changes unless they are from the panel.

Figure 244. Pro-Bel SW-P-08 Router Switcher Setup

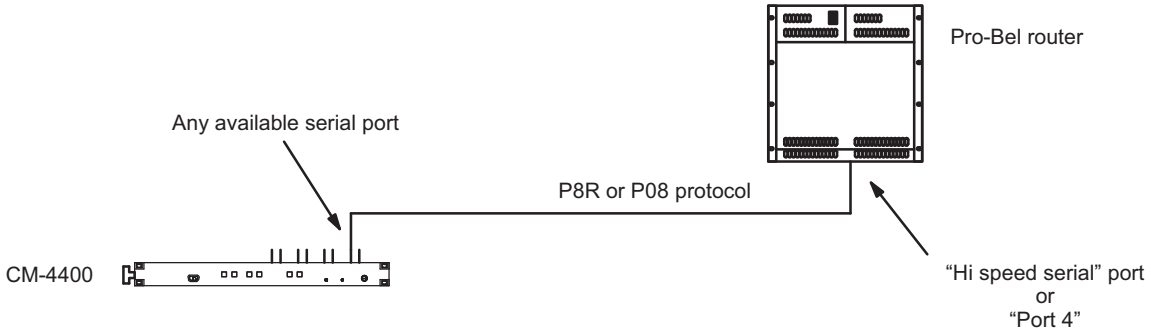

This section will describe the needed setup and configuration steps to use the Pro-Bel SWP-08 protocol for:

- Jupiter Router control
- Remote Router control

Jupiter Router Control

You will need to configure the Jupiter CM-4400 to use a Pro-Bel SW-P-08 Router Control port. This is accomplished by adding entries in the Serial Protocol and MPK Devices tables.

Note These steps assume that the CM-4400 has been configured properly.

Enter Serial Protocol Information

You may need to modify the Configuration set that is currently active; if so, Grass Valley recommends that you make a copy for editing before making these changes.

For more information about modifying the Configuration set, please see *Modify and Download Configuration Set* on page 131.

Note On the Title bar of the Jupiter Configurator application you will see the name of the Configuration set. Make sure that the configuration set that is opened is the correct set that you want to change.

Follow these steps to enter or modify the Serial Protocol table:

1. Select the Serial Protocol option from the Jupiter menu (Jupiter > Serial Protocol). The Serial Protocol table will then open (Figure 245).

Figure 245. Example of the Serial Protocol Table

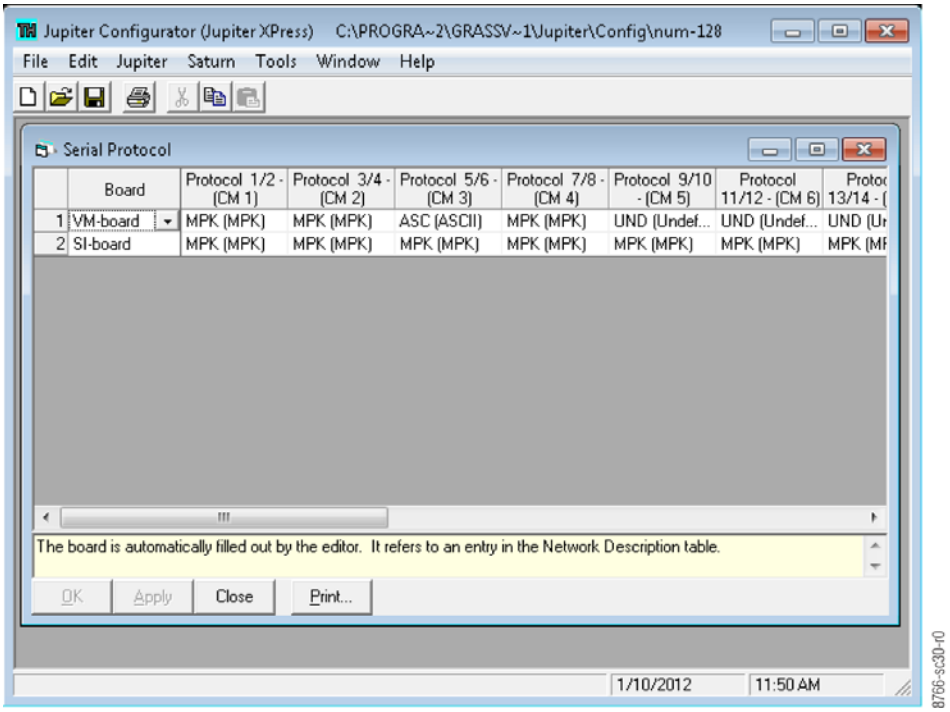

2. Double-click the protocol box that is associated with the Serial port. A drop-down list will show the possible protocol types.
3. Select the P08 (SWP-08 Control Panel) protocol.
4. Click anywhere else in the table to close the entry. The default Baud rates will be selected automatically; however, the Baud rate may be changed by clicking the drop down menu (Figure 246).

Figure 246. The P08(SW-P-08 Control Panel) Protocol on The Serial Protocol Table

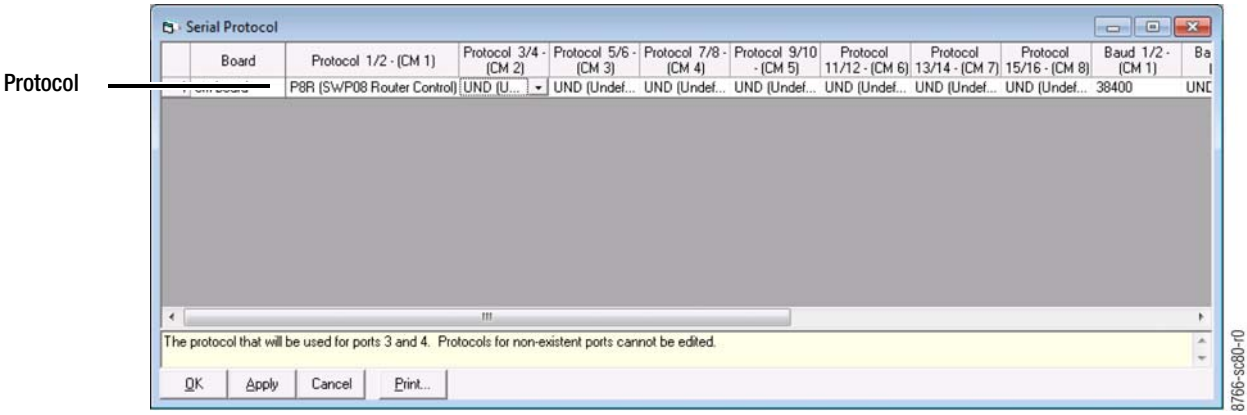

5. Click the **Apply** button and then save your changes.

Note The serial line parameters are:

- 38400 Baud
- 8 data bits
- No parity
- 1 stop bit
- The baud rate is adjustable

Enter MPK Information

You will need to make entries in the MPK Devices table for the port to associate the Input, Output and Level sets. The Device Type is Serial with a Serial Input and an Output set. The level type is cp3000.

Note These steps assume that a Serial Input set, Output set, and a Level set have already been configured. For steps to configure a CM-4400 see *Configurator Application* on page 109.

Follow these steps to enter or modify the MPK table:

1. Select the MPK Devices option from the Jupiter menu (Jupiter> MPK Devices). The MPK Devices table will then open.
2. Enter a name in the MPK Devices column.
3. Click the Device Type drop-down list and then select the Serial option.
4. Click the Board drop-down list and then select the preferred board.
5. Enter the Port number in the Port column.
6. Select the Input Sets drop-down list and then select the preferred Serial input set.

7. Select the Output Sets drop-down list and then select the preferred Serial Output set.
8. Select the Level Sets drop-down list and then select the preferred Serial Level set.
9. Click the **Apply** button and then save your changes (See line #5 in Figure 247).

Figure 247. MPK Device Table

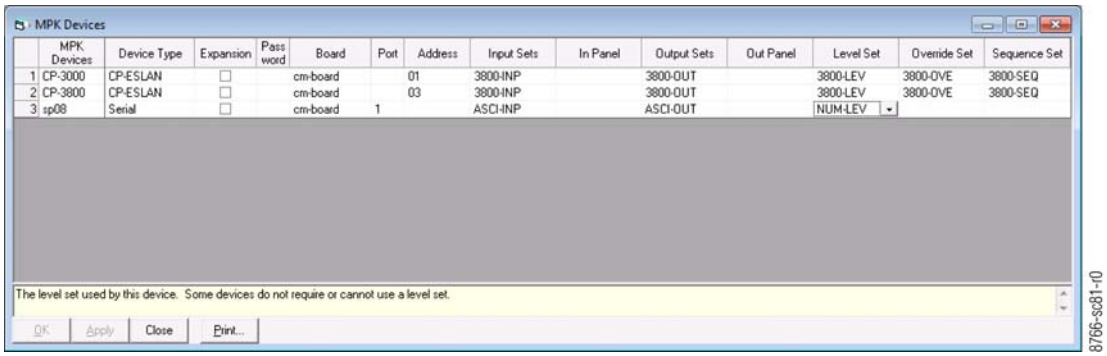

Pro-Bel SW-P-08 Protocol Commands

This section provides the command and a description for the commands that are implemented to interface with a Studer Router switcher using the Pro-Bel Pro-Bel SW-P-08 protocol. Both the normal and extended Pro-Bel commands are supported.

You should be familiar with the Pro-Bel SW-P-08 commands before using this information.

Table 33. Pro-Bel Pro-Bel SW-P-08 Protocol Commands

Command	Description
Crosspoint Interrogate	This command responds with a Crosspoint Tally message.
Crosspoint Connect	This command responds with a Crosspoint Connected message. In addition Jupiter accepts Crosspoint Connected messages and converts them into Crosspoint Connect messages except that there is no further status response. This was done to update the Jupiter status from status messages sent from the Studer interface.
SingleSourceNameRequest	This command responds with a SourceNamesResponse message. The Jupiter name length is 8 characters but the protocol implementation supports all the Pro-Bel lengths (FourChar, EightChar, and TwelveChar).
SingleDestinationAssociation-NamesRequest	This command responds with a DestinationAssociationNamesResponse message.

Remote Router Control

Note You will need a specific Jupiter license key to enable the P08R option in the Driver column of the Switcher Description table.

This interface will send the Crosspoint Connect message and will wait for a matching Crosspoint Connected message to confirm the switch.

Pro-Bel's `Extended Crosspoint Connect` and `Extended Connected` commands are used when there are more than 1023 inputs or outputs.

Determine Protocol Matrix and Level

When a Third-Party switcher of this type and a Grass Valley Crosspoint Bus switcher are entered on the Switcher Description table, an offset of 100 can be used to avoid having the same level numbers for both switchers. For example, if you have two switchers, an Alpha Image and a Datatek.

- A hardware level setting of "0" on the Alpha Image switcher could be entered on the Switcher Description table as "100." If the Pro-Bel remote router also uses level "0," it would be entered as "200" in the *PLvl* field.
- A hardware Level setting of "1" on the Datatek switcher could be entered on this table as "101."

This offset eliminates the need to re-set existing level settings on the hardware.

The Protocol matrix and Level are both set by the Jupiter system's Physical level value, which ranges from 0 to 99. The matrix is the physical level (PLvl) divided by 16. The protocol level is the remaining physical level value from 16. The physical level is found on the Jupiter CM Switcher Description table.

For example, in Figure 248 the Physical level value on row 7 is 102.

Figure 248. Physical Level on the Switcher Description Table

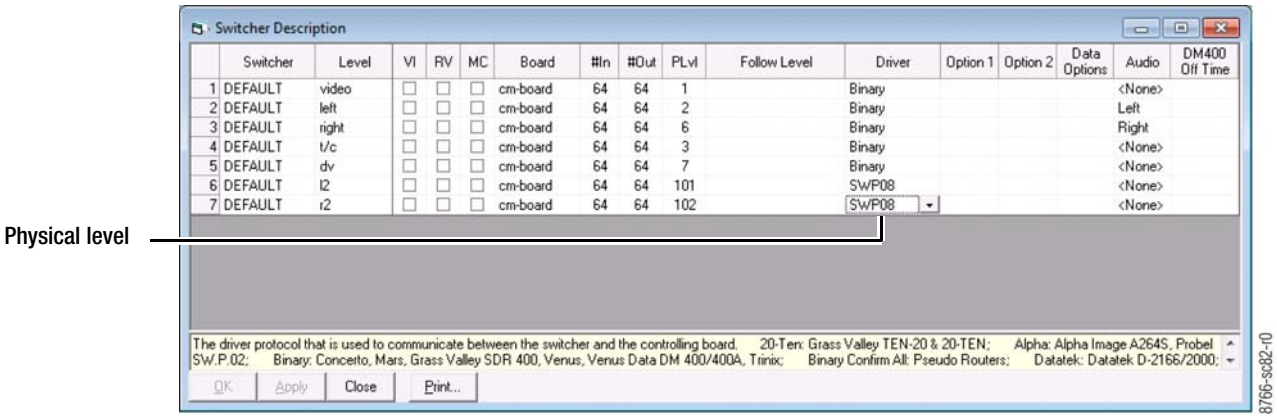

	Switcher	Level	VI	RV	MC	Board	#In	#Out	PLvl	Follow Level	Driver	Option 1	Option 2	Data Options	Audio	DM400 Off Time
1	DEFAULT	video				cm-board	64	64	1		Binary				<None>	
2	DEFAULT	left				cm-board	64	64	2		Binary				Left	
3	DEFAULT	right				cm-board	64	64	6		Binary				Right	
4	DEFAULT	t/c				cm-board	64	64	3		Binary				<None>	
5	DEFAULT	dv				cm-board	64	64	7		Binary				<None>	
6	DEFAULT	l2				cm-board	64	64	101		SWP08				<None>	
7	DEFAULT	r2				cm-board	64	64	102		SWP08				<None>	

All values over 100 are offset by 100; hence, the Physical level value would be 2. In this example the Protocol matrix value is: 0

For more information see Table 34.

Remote Router Values

As stated earlier, all Remote-Router Physical level values are offset. The Pro-Bel SW-P-08 remote router physical level value is offset by 100. The following table shows the Matrix and Level values for a given PLVL.

Table 34. Remote Router Values for Physical Level (0 - 99), Matrix, and Level

PLvl	Matrix	Level	PLvl	Matrix	Level	PLvl	Matrix	Level
0	0	0	36	2	4	72	4	8
1	0	1	37	2	5	73	4	9
2	0	2	38	2	6	74	4	10
3	0	3	39	2	7	75	4	11
4	0	4	40	2	8	76	4	12
5	0	5	41	2	9	77	4	13
6	0	6	42	2	10	78	4	14
7	0	7	43	2	11	79	4	15
8	0	8	44	2	12	80	5	0
9	0	9	45	2	13	81	5	1
10	0	10	46	2	14	82	5	2
11	0	11	47	2	15	83	5	3
12	0	12	48	3	0	84	5	4
13	0	13	49	3	1	85	5	5
14	0	14	50	3	2	86	5	6
15	0	15	51	3	3	87	5	7
16	1	0	52	3	4	88	5	8
17	1	1	53	3	5	89	5	9
18	1	2	54	3	6	90	5	10
19	1	3	55	3	7	91	5	11
20	1	4	56	3	8	92	5	12
21	1	5	57	3	9	93	5	13
22	1	6	58	3	10	94	5	14
23	1	7	59	3	11	95	5	15
24	1	8	60	3	12	96	6	0
25	1	9	61	3	13	97	6	1
26	1	10	62	3	14	98	6	2
27	1	11	63	3	15	99	6	3
28	1	12	64	4	0			
29	1	13	65	4	1			
30	1	14	66	4	2			
31	1	15	67	4	3			
32	2	0	68	4	4			
33	2	1	69	4	5			
34	2	2	70	4	6			
35	2	3	71	4	7			

The above table will start over after 100.

Enter Serial Protocol information

The steps to configure Jupiter for Remote router control are similar to the steps to control Jupiter. That is, adding entries in the Serial Protocol table.

Note These steps assume that the CM-4400 has been configured properly. For steps to configure a CM-4400 see *Configurator Application* on page 109.

In most cases, you will need to modify the Serial Protocol set that is currently active; if so, Grass Valley recommends that you a copy for editing.

Note On the top of the Jupiter Configurator window on the title bar, you will see the name of the Configuration set. Ensure that the configuration set that is opened is the one that you want to change.

Follow these steps to enter or modify the Serial Protocol table:

1. Select the Serial Protocol option from the Jupiter menu (Jupiter> Serial Protocol). The Serial Protocol table will then open (Figure 245).

Figure 249. Example of the Serial Protocol Table

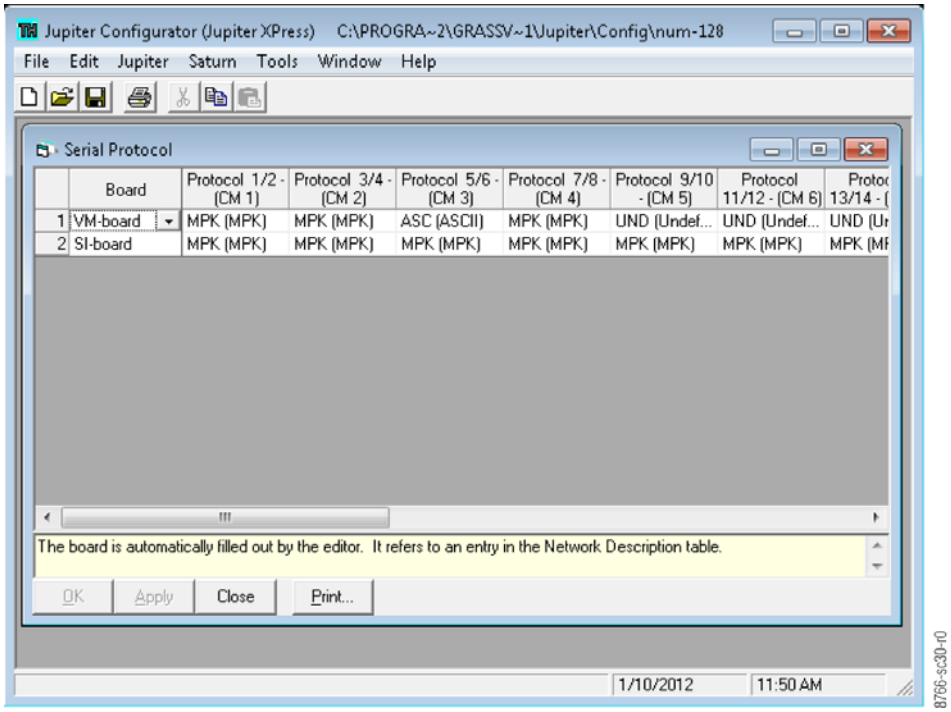

2. Double-click the protocol box that is associated with the Serial port. A drop-down list will show the possible protocol types.
3. Select the P8R (SWP-08 Router Control) protocol.

4. Click anywhere in the table accept the entry. The Baud rates will be selected automatically (Figure 246). The Baud rate can be changed by clicking the drop-down list in the Baud rate column.

Figure 250. The P8R (SW-P-08 Router Control) Protocol on The Serial Protocol Table

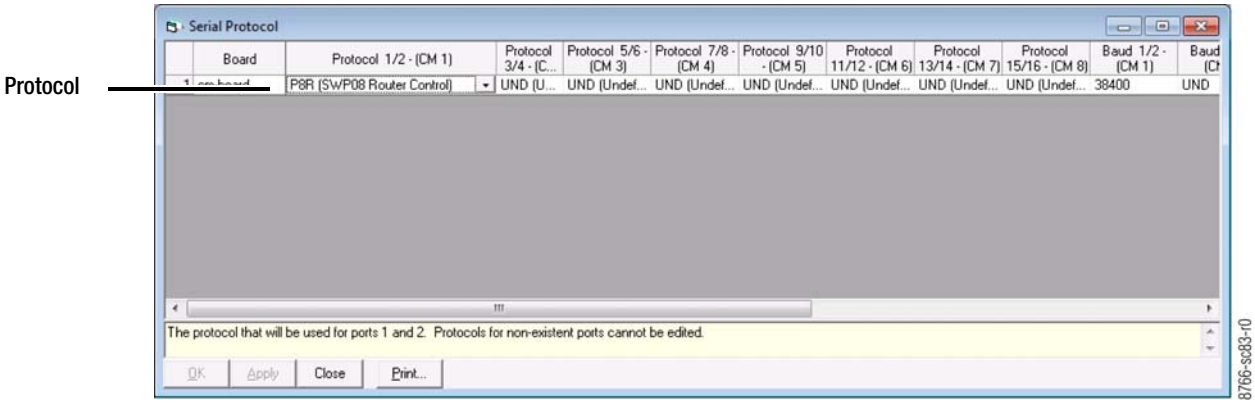

5. Click the **Apply** button and then save your changes.
6. Compile and activate the Configuration set. (See *Configurator Application* on page 109.)

Pro-Bel SW-P-08 Interface Implementation Notes

P8R (SW-P-08 Router Control)

The P8R (SW-P-08 Router Control) driver will send the following:

Table 35. P8R(SW-P-08 Router Control) driver Sent Information

Message	Value
CONNECT	2 (matrix=pLvl/16, level =pLvl%16 input < 1024 output < 1024)
CONNECT_EXT	130 (depending on the input and output >= 1024)

This P8R (SW-P-08 Router Control) driver will receive the following:

Table 36. P8R(SW-P-08 Router Control) driver Received Information

Message	Value
CONNECTED	4
CONNECTED_EXT	132

When the P8R (SW-P-08 Router Control) driver is used, the following will occur:

- The Commands that are not extended will truncate the Matrix and the Level values to a 4 bit value. The Level value in the PLvl column of the Switcher Description Table is converted into a unique Level value between 0 and 100 (0 - 0x63).
- The Physical level (PLvl) value is then converted into a Pro-Bel SW-P-08 Matrix and Level value. The Pro-Bel SW-P-08 level value is from 0 to 15 and the Pro-Bel SW-P-08 matrix value is from 0 to 6, which is the physical level divided by 16.
- A Jupiter system TAKE command will send a Pro-Bel CONNECT message, which is confirmed when a CONNECTED message is received immediately following the CONNECT message.
- The interface will re-send a CONNECT message up to three more times after an error or if the CONNECTED response is not what was expected to confirm the TAKE command.
- The protocol ACKS all messages that are received correctly even if they are not implemented.

P08 (SW-P-08 Control Panel)

The P08 (SW-P-08 Control Panel) driver will receive the following information:

Table 37. P08 (SW-P-08 Control Panel) Received Information

Message	Value
CONNECT	2
CONNECT_EXT	130
INTERROGATE	1
INTERROGATE_EXT	129
CONNECTED	4
CONNECTED_EXT	132
Single source name request	101
Single destination name request	103
Single source name extended	229
Single destination name extended	231

The P08 (SW-P-08 Control Panel) sends the following information:

Table 38. P08 (SW-P-08 Control Panel) Sent Information

Message	Value
TALLY	3
TALLY_EXT	131
CONNECTED	4
CONNECTED_EXT	132
Source name response	106
Destination name response	107
Source name response extended	234
Destination name response extended	235

When the P08 (SW-P-08 Control Panel) driver is used, the following will occur:

- The control panel level value is a combination of the Pro-Bel SW-P-08 matrix and level values. The level is the matrix times 16 plus the level.
- The interface ACKS all messages that are received correctly even if they are not implemented.
- The system responds to a CONNECT message with a CONNECTED message only when the cross point is valid. Unsolicited CONNECTED messages will be sent for confirmed TAKES to outputs in the control panel set.

Commands are repeated up to 3 times when a NAK (error) occurs.

Physical Serial Interface

This section describes the pins of the Serial cable. The two Tables (Table 39 and Table 40) describe the configuration.

Figure 251. Serial Cable Pin-out

Table 39. Control Module RS-422/485 Female 9 pin Configuration

Pin #	Configuration
1	GND
2	RX-
3	TX+
7	RX+
8	TX-

Table 40. PC RS-232 Male DTE pin Configuration

Pin #	Configuration
5	GND
2	RXD
3	TXD

Index

Symbols

36, 55, 60, 121, 144, 157, 197, 203, 244, 245

A

Access Jupiter Tables
AccuSwitch Configuration File 119
Accessing a Program Within a Group
JNS Control Console 102
AccuSwitch Configuration File
Access Jupiter Tables 119
Close Configurator Application 120
Configuration Error Check – CPES-SER Device Type 118
Configurator Application 112
Configurator Editing Guidelines 120
Entering or Editing Information in a Jupiter Table 121
Navigate and Copy Rows 123
Reorder Jupiter Tables 123
Copy and Paste Rows 124
Delete a Row 124
Insert a Row 123
Re-order a Table 124
Configure a New Set 113
Configuring a New Set 113
CPES-SER Device Type 118
Create Control Panel Sets 113
Export a Configuration Set 113
Exporting a Configuration Set 113
Find/Fill/Increment 125
Copy and Paste a Block 127
Copy and Paste Rows 129
Fill Command 126
Find Command 125
Increment Command 126
Naming Rules 130
Unzip, Open, Edit, and Compile the Configuration Set 118
Upload a Configuration File 115
Uploading a Configuration File 115
AccuSwitch Software Configuration
CP Level Set Tables 215
MPK Devices Tables 215
CP Input Sets–SYS1 Server 217
CP Input Sets–SYS2 Server 219
CP Output Sets–SYS1 Server 220
CP Output Sets–SYS2 Server 221
Switcher Input Tables–SYS1 Server 216
Switcher Input Tables–SYS2 Server 218
Switcher Output Tables–SYS1 Server 219
Switcher Output Tables–SYS2 Server 220
Network Description Tables 210
System 1 Server 211
System 2 Server 211
Path Finding 221
Remote System Routing 210
Switcher Description Tables 212
SYS1 212
SYS2 214
Activate a Set
JNS Control Center Tabs 234
Adding/Editing Sequences
Control Panel Sets Dialog Box 185
Additional Connections
Configuring the AccuSwitch Control Panels Connections 43
Additional Protocol Notes
Serial Protocol Table 156
Adjust Column Widths
Run the JNS Log Viewer 255
Alarm Modes
CM-4400 Control System Protection Features 43
Alarms in a Redundant CM-4400 Installation
CM-4400 Control System Protection Features 44
Alarms in a Single CM-4400 Installation
CM-4400 Control System Protection Features 44
Alternate Routes – Manual Selection
Sequential Path Finding Table 197
ASCII Commands
ASCII Communications Protocol 274
ASCII Communications Protocol
ASCII Commands 274
ASCII Data Format 274
Overview 273
ASCII Data Format
ASCII Communications Protocol 274
Automatic Table Entry
AccuSwitch Configuration File 121

Automatic Table Entry Feature
Network Description Table 151
Automation
Connection 74
Automation and Other Systems Connections
Devices Using "ESswitch" ESbus Routing Switcher Dialect 74
Devices using Jupiter ASCII Computer Interface Protocol 75
Hardware Installation 74
Automation Interface Protocols
Matrix Router Control Buses 283

B

Board Info /Control Tab
Restart Procedures 105
Board Info/Control
BOOTP 238
Configuration 233
Activate a Set 234
Perform a Pending Reboot Procedure 235
JNS Control Center Tabs 230
Reboot Processor s 236
Selecting Boards 231
Clear Flash 232
Clear PMEM 232
Post Mortem 232
Probe Connections 233
Reboot 232
Start Board Override 232
Telnet 233
Update Board Info 233
Board Status
JNS Control Center Tabs 229
Board Status – JNS Tools
Menus 223
File 223
Help 224
Options 224
Overview 223
Table Description 224
BOOTP
JNS Control Center Tabs 238

C

Cabling
Hardware Installation 53
Calculating Loading
File Server Minimum Specifications 281
Calculating Loading Example
File Server Minimum Specifications 282
Category Selection and Error
Control Panel Sets Dialog Box 190
CB 3000 Control Buffer
Equipment Dimensions 280
Hardware Installation 73
Routing Switcher Requirements 73
Thomson/Philips DD Series (Diamond) Connection 74
CC 2010 Matrix (Crosspoint Bus) Cable
Crosspoint Bus Cables Diagram 71
Hardware Installation 71
VDE EMI/RFI Modifications to Matrix Cables 72
Change Category Set Associated With an Input or Output Set
Control Panel Sets Dialog Box 186
Change Password
Passwords 147
Clear Flash
JNS Control Center Tabs 232
Clear PMEM
JNS Control Center Tabs 232
Clearing Parameter Memory (PMEM) 107
Clearing Persistent Memory (PMEM)
JNS Control Console 107
Close Configurator Application
AccuSwitch Configuration File 120
CM-4400 Checklist
Troubleshooting 257
CM-4400 Connections
Hardware Installation 39
CM-4400 Control System Protection Features
Alarm Modes 43
Alarms in a Redundant CM-4400 Installation 44
Alarms in a Single CM-4400 Installation 44
Control Module Alarm Circuit 44
Hardware Installation 43
Redundant Units 45
Correcting Problems with the Replacement 47
Manually Switching A CM-4400 46

Replacing a Failed Unit 46
Verifying the Replaced Unit is Ready for Use 47
CM-4400 Crosspoint Buffer and Interface
Green LEDs 259
Red LEDs 258
Troubleshooting 258
CM-4400 Jupiter AccuSwitch Control System
Introduction 32
CM-4400 Serial Bus Loading
File Server Minimum Specifications 281
CM-4400 Specifications 277
Electrical 277
Matrix Routing Switcher Control Buses 278
File Server Minimum Specifications 279
Equipment Dimensions 279
CB 3000 Control Buffer 280
CM-4400 System Controller 279
PC 3000 File Server 280
Software Required 279
System Limitations 280
Calculating Loading 281
Calculating Loading Example 282
CM-4400 Serial Bus Loading 281
Maximum Number of Logical Levels 280
Supported Data Routers 282
CM-4400 System Codes
Error Codes 259
Other Codes 271
Shutdown Codes 270
Startup Codes 270
Troubleshooting 259
CM-4400 System Controller
Equipment Dimensions 279
Front 32
Introduction 31
Rear 31
Configuration
Activate a Set 234
JNS Control Center Tabs 233
Perform a Pending Reboot Procedure 235
Configuration Error Check – CPES-SER Device Type
AccuSwitch Configuration File 118
Configuration Set Management
Configurator Application 131
Copy Configuration Set 132
Download Now/Reboot Later (Pending Reboot) 137
Edit Configuration Set 133
Mismatch Indicator 141
Modify and Download Configuration Set 131
Pending Reboot 137
Use Numeric Sets for Quick Switcher Checkout 134
Validate, Compile, and Activate (Downloading) Configuration Set 135
Configuration Tab
Restart Procedures 105
Configurator Application 109
AccuSwitch Configuration File 112
Access Jupiter Tables 119
Close Configurator Application 120
Configuration Error Check – CPES-SER Device Type 118
Configurator Editing Guidelines 120
Automatic Table Entry 121
Enter/Edit Information in a Jupiter Table 121
Navigate and Copy Rows 123
Reorder Jupiter Tables 123
Copy and Paste Rows 124
Delete a Row 124
Insert a Row 123
Re-order a Table 124
Configure a New Set 113
CPES-SER Device Type 118
Create Control Panel Sets 113
Export a Configuration Set 113
Find/Fill/Increment 125
Copy and Paste a Block 127
Copy and Paste Rows 129
Fill Command 126
Find Command 125
Increment Command 126
Naming Rules 130
Unzip, Open, Edit, and Compile the Configuration Set 118
Upload a Configuration File 115
Configuration Set Management 131
Copy Configuration Set 132
Download Now/Reboot Later (Pending Reboot) 137
Edit Configuration Set 133
Mismatch Indicator 141
Modify and Download Configuration Set 131

Pending Reboot 137
Use Numeric Sets for Quick Switcher Checkout 134
Validate, Compile, and Activate (Downloading) Configuration Set 135
Configure an Exclusion Tabl 202
Control Panel Sets Dialog Box 172
Control Panel Category Set 185
Category Selection and Error 190
Change Category Set Associated With an Input or Output Set 186
CPESXTND Sets 187
CPESXTND CP Type 188
CPESXTND Input Set 189
CPESXTND Output CP Type 188
CPESXTND Output Set 189
Defining Categories 186
Control Panel Input Set 175
Copy a CP Input Set to Use With a Different Panel Type 177
Creating an Input CP Set 175
Entering Information – Input Set Table 177
Control Panel Level Set 173
Entering Level Information 174
Level Numbering and External Control Computers Using ASCII Protocol 175
Control Panel Output Set 179
Control Panel Override Set 181
Defining Overrides 181
Enter Override Set Table Information 183
Control Panel Sequence Set 183
Adding/Editing Sequences 185
Defining a Sequence Set 184
Copy CP Output Set to Use with a Different Panel Type 181
Enter Output Set Table Information 180
Optional Entries 181
MPK Devices Table 190
Configure Control Panel for Full-matrix, Multi-bus, or Single-bus Control 192
L-S or LCD Panels Entries 193
MPK Devices Table Description 191
Zero-Downtime Feature 192
Network Description Table 151
Automatic Table Entry Feature 151
Enter Controller Board Descriptions 152
Overview 109
Passwords 144
Change Password 147
Force Unprotect/Unlock 150
Overview 144
Set Control Panel Password Levels 149
Set Switcher Output Password Levels 150
Path Finding Between Analog and Digital Equipment 198
Convert Analog Signals to Combined Digital Signals 198
Non-sequential Path Finding Table 200
Point-to-Point Switching 207
SAFE input 208
Switching Router Options 207
Remote System Routing 208
AccuSwitch Software Configuration 210
CP Level Set Tables 215
MPK Devices Tables 215
CP Input Sets–SYS1 Server 217
CP Input Sets–SYS2 Server 219
CP Output Sets–SYS1 Server 220
CP Output Sets–SYS2 Server 221
Switcher Input Tables–SYS1 Server 216
Switcher Input Tables–SYS2 Server 218
Switcher Output Tables–SYS1 Server 219
Switcher Output Tables–SYS2 Server 220
Network Description Tables 210
System 1 Server 211
System 2 Server 211
Path Finding 221
Switcher Description Tables 212
SYS1 212
SYS2 214
Remote System Routing Characteristics 210
Sequential Path Finding Table 193
Path Finding – Three or More Switchers 196
Alternate Routes – Manual Selection 197
Table Entries 197
Serial Protocol Table 153
Connect L-S or LCD Series Control Panels 157
Enter Controller Board Protocol 155
Additional Protocol Notes 156
Serial Protocol Selection Options 155
Saturn Video Processor – Entry for MPK Port 156
Starting the Configurator Application 109
Switcher Input Table 163
Enter/Edit Input Names and Numbers 165
CP Input/Output Sets and Control Panel Operation 169
Data Switching Applications 166, 167
Split Switching 164

Switcher Level Descriptions 157
Switcher Output Table 169
Enter/Edit Output Names and Numbers 170
Security 170
Set Switcher Output Password Levels 171
Time Standard Table 203
Set Time Code Information 203
Time Standard Table Description 204
Use Numeric Sets for Quick Switcher Checkout 205
Troubleshooting 143
Disconnect File Server from LAN 144
Error Conditions 143
Inadvertent Loss of Power 144
On-line Help 144
Printing 144
Program Crash Recovery 143
ZIP a Configuration Set with Diagnostic Information (Support Package) 143
Video Reference Table 206
Configurator Editing Guidelines 120
AccuSwitch Configuration File 120
Enter/Edit Information in a Jupiter Table 121
Navigating and Copying Rows 123
Reorder Jupiter Tables 123
Copy and Paste Rows 124
Delete a Row 124
Insert a Row 123
Re-order a Table 124
Configure a New Set
AccuSwitch Configuration File 113
Configure an Exclusion Table
Configurator Application 202
Configure Control Panel for Full-matrix, Multi-bus, or Single-bus Control
MPK Devices Table 192
Configuring AccuSwitch Control Panel Connections
Hardware Installation 41
Configuring the AccuSwitch Control Panels Connections
Additional Connections 43
Connection Type 42
Connect L-S or LCD Series Control Panels
Serial Protocol Table 157
Connecting Other Routers
Matrix Router Control Buses 283
Automation Interface Protocols 283
Datatek D-2000/2166 Connections
Software Configuration 289
Horizon Matrix Routing Switcher Connections
Software Configuration 288
Nexus Audio Routing System
Software Configuration 292
Physical IO Limits 284
Serial Control Routing Switcher Protocols 284
SMS 7000 Connections 286
Support for Wild Card Characters in the ES LAN Protocol 284
Supported Protocols 283
Supported Routers 283
Triton Systems 285
Utah Scientific Party Line Connection Using UDI-1B
Software Configuration 290
Physical Serial Interface 303
Pro-Bel SW-P-08 Protocol 293
Jupiter Router Control 294
Enter MPK Information 296
Enter Serial Protocol Information 294
Pro-Bel SW-P-08 Protocol Commands 297
Pro-Bel SW-P-08 Interface Implementation Notes 301
P08 (SW-P-08 Control Panel) 302
P8R (SW-P-08 Router Control) 301
Remote Router Control 297
Determine Protocol Matrix and Level 298
Enter Serial Protocol information 300
Remote Router Values 299
Connecting the CM-4400 to the Jupiter LAN
CM-4400 Connections 39
Configuring AccuSwitch Control Panel Connections 41
Configuring the AccuSwitch Control Panels Connections
Additional Connections 43
Connection Type 42
Ethernet Switch to System Controller Connection 40
Hardware Installation 39
Jupiter File Server Connection 40
Connecting to Multiple Crosspoint Bus Distribution Switchers
Connection to Multiple Distribution Switchers with Path Finding 64

Non-sequential Path Finding (Non-sequential Wiring) 66
Sequential Path Finding (Sequential Wiring) 65
Data Router Constraints 68
Dedicated CM-4400 Per Switcher 63
Hardware Installation 62
Path Finding with Data Routers 67
Using a Single CM-4400 62
Connecting to Serial Controlled Routers
Hardware Installation 50
Connection to Multiple Distribution Switchers with Path Finding
Hardware Installation 64
Non-sequential Path Finding (Non-sequential Wiring) 66
Sequential Path Finding (Sequential Wiring) 65
Connection Type
Configuring the AccuSwitch Control Panels Connections 42
Console Port
Restart Procedures 107
Control Functions
Control Panels 35
Distribution Routing Switcher Control 34
Path Finding Option 34
Remote (Serial Control) Routing switcher Interface Option 34
External Control Protocols 34
File Server (Configuration PC) 35
Introduction 34
Software Control Panels (GUI Control Panel) 35
Control Module Alarm Circuit
CM-4400 Control System Protection Features 44
Control Panel Category Set
Change Category Set Associated With an Input or Output Set 186
Control Panel Sets Dialog Box 185
CPESXTND Sets 187, 190
CPESXTND CP Type 188
CPESXTND Input Set 189
CPESXTND Output CP Type 188
CPESXTND Output Set 189
Defining Categories 186
Control Panel Input Set
Control Panel Sets Dialog Box 175
Copy a CP Input Set to Use With a Different Panel Type 177
Creating an Input CP Set 175
Entering Information – Input Set Table 177
Control Panel Installation
Hardware Installation 70
Control Panel Level Set
Control Panel Sets Dialog Box 173
Entering Level Information 174
Level Numbering and External Control Computers Using ASCII Protocol 175
Control Panel Output Set
Control Panel Sets Dialog Box 179
Control Panel Override Set
Control Panel Sets Dialog Box 181
Defining Overrides 181
Enter Override Set Table Information 183
Control Panel Sequence Set
Adding/Editing Sequences 185
Control Panel Sets Dialog Box 183
Defining a Sequence Set 184
Control Panel Sets Dialog Box
Configurator Application 172
Control Panel Category Set 185
Category Selection and Error 190
Change Category Set Associated With an Input or Output Set 186
CPESXTND Sets 187
CPESXTND CP Type 188
CPESXTND Input Set 189
CPESXTND Output CP Type 188
CPESXTND Output Set 189
Defining Categories 186
Control Panel Input Set 175
Copy a CP Input Set to Use With a Different Panel Type 177
Creating an Input CP Set 175
Entering Information – Input Set Table 177
Control Panel Level Set 173
Entering Level Information 174
Level Numbering and External Control Computers Using ASCII Protocol 175
Control Panel Output Set 179
Control Panel Override Set 181
Defining Overrides 181
Enter Override Set Table Information 183
Control Panel Sequence Set 183
Adding/Editing Sequences 185

Defining a Sequence Set 184
Copy CP Output Set to Use with a Different Panel Type 181
Enter Output Set Table Information 180
Optional Entries 181
Control Panels
Introduction 35
Convert Analog Signals to Combined Digital Signals
Path Finding Between Analog and Digital Equipment 198
Copy a CP Input Set to Use With a Different Panel Type
Control Panel Sets Dialog Box 177
Copy and Paste a Block
AccuSwitch Configuration File 127
Copy and Paste Rows
AccuSwitch Configuration File 129
Configurator Editing Guidelines 124
Copy Configuration Set
Configuration Set Management 132
Copy CP Output Set to Use with a Different Panel Type
Control Panel Sets Dialog Box 181
Correcting Problems with the Replacement
CM-4400 Control System Protection Features 47
CP Category set 185
CP Input Sets–SYS1 Server
AccuSwitch Software Configuration 217
CP Input Sets–SYS2 Server
AccuSwitch Software Configuration 219
CP Input/Output Sets and Control Panel Operation
Switcher Input Table 169
CP Level Set Tables
Remote System Routing 215
CP Output sets 179
CP Output Sets–SYS1 Server
AccuSwitch Software Configuration 220
CP Output Sets–SYS2 Server
AccuSwitch Software Configuration 221
CP Sequence set 183
CPES-SER Device Type
AccuSwitch Configuration File 118
CPESXTND CP Type
Control Panel Category Set 188
CPESXTND Input Set
Control Panel Category Set 189
CPESXTND Output CP Type
Control Panel Category Set 188
CPESXTND Output Set
Control Panel Category Set 189
CPESXTND Sets
Control Panel Sets Dialog Box 187
CPESXTND CP Type 188
CPESXTND Input Set 189
CPESXTND Output CP Type 188
Create Control Panel Sets
AccuSwitch Configuration File 113
Creating an Input CP Set
Control Panel Sets Dialog Box 175
Crosspoint Bus Cables Diagram
CC 2010 Matrix (Crosspoint Bus) Cable 71

D

Data Matrix Switching
Hardware Connections 61
Hardware Installation 61
Software Configuration 61
Data Router Constraints
Hardware Installation 68
Data Switching Applications
Switcher Input Table 166, 167
Datatek D-2000/2166 Connections
Software Configuration 289
Date/Time Filter
Run the JNS Log Viewer 253
Dedicated CM-4400 Per Switcher
Hardware Installation 63
Defining a Sequence Set
Control Panel Sets Dialog Box 184
Defining Categories
Control Panel Sets Dialog Box 186
Defining Overrides
Control Panel Sets Dialog Box 181
Delete a Row
Configurator Editing Guidelines 124
Determine Protocol Matrix and Level
Remote Router Control 298
Devices Using “ESswitch” ESbus Routing Switcher Dialect
Hardware Installation 74

Devices using Jupiter ASCII Computer Interface Protocol
Hardware Installation 75
Disconnect File Server from LAN
Troubleshooting 144
Display Status
Router Control Application 240
Distribution Routing Switcher Control
Introduction 34
Path Finding Option 34
Remote (Serial Control) Routing switcher Interface Option 34
documentation online 4
Double-Y Cable
Hardware Installation 56
Download Now/Reboot Later (Pending Reboot)
Configuration Set Management 137
Dynamic Displays
Run the JNS Log Viewer 250

E

Edit Configuration Set
Configuration Set Management 133
Electrical
ASCII Communications Protocol 277
Matrix Routing Switcher Control Buses 278
Enter Controller Board Descriptions
Network Description Table 152
Enter Controller Board Protocol
Additional Protocol Notes 156
Serial Protocol Selection Options 155
Serial Protocol Table 155
Enter MPK Information
Pro-Bel SW-P-08 Protocol 296
Enter Output Set Table Information
Control Panel Sets Dialog Box 180
Enter Override Set Table Information
Control Panel Sets Dialog Box 183
Enter Serial Protocol Information
Pro-Bel SW-P-08 Protocol 294
Enter Serial Protocol information
Remote Router Control 300
Enter/Edit Information in a Jupiter Table
AccuSwitch Configuration File 121
Enter/Edit Input Names and Numbers
CP Input/Output Sets and Control Panel Operation 169
Data Switching Applications 166, 167
Switcher Input Table 165
Enter/Edit Output Names and Numbers
Switcher Output Table 170
Entering Information – Input Set Table
Control Panel Sets Dialog Box 177
Entering Level Information
Control Panel Sets Dialog Box 174
Equipment Dimensions
CB 3000 Control Buffer 280
CM-4400 System Controller 279
File Server Minimum Specifications 279
PC 3000 File Server 280
Equipment Required
Software Installation 80
Error Codes
CM-4400 System Codes 259
Error Conditions
Troubleshooting 143
ESD
Requirements for Personnel 27
ESD Guidelines 25
ESD Protection 25
Ethernet Switch to System Controller Connection
Hardware Installation 40
Exclusion table 202
Export a Configuration Set
AccuSwitch Configuration File 113
External Control Protocols
Introduction 34

F

FAQ database 4
File
Board Status – JNS Tools 223
File Menu
Jupiter Control Center 228
File Server (Configuration PC)
Introduction 35
Jupiter Configuration Editor 36
System Logger 36
File Server Minimum Specifications
ASCII Communications Protocol 279
Equipment Dimensions 279

CB 3000 Control Buffer 280
CM-4400 System Controller 279
PC 3000 File Server 280
Software Required 279
System Limitations 280
Calculating Loading 281
Calculating Loading Example 282
CM-4400 Serial Bus Loading 281
Maximum Number of Logical Levels 280
File Server PC
Installation 68
Fill Command
AccuSwitch Configuration File 126
Find Command
AccuSwitch Configuration File 125
Find/Fill/Increment
AccuSwitch Configuration File 125
Copy and Paste a Block 127
Copy and Paste Rows 129
Fill Command 126
Find Command 125
Increment Command 126
Force Unlock
Menu Bar 244
Overview 243
Table Description 243
Unlock and Un-protect 244
Unlock and Un-protect an Individual Output 245
Unlock and Un-protect an Output 244
Force Unlock application 243
Force Unprotect/Unlock
Passwords 150
frequently asked questions 4
Front Panel Reset Button
Restart Procedures 106
FTP Status
JNS Control Center Tabs 229

G

Grass Valley web site 4
Green LEDs
CM-4400 Crosspoint Buffer and Interface 259

H

Hardware Installation 37
Automation and Other Systems Connections 74
Devices Using “ESswitch” ESbus Routing Switcher Dialect 74
Devices using Jupiter ASCII Computer Interface Protocol 75
CB 3000 Control Buffer 73
Routing Switcher Requirements 73
Thomson/Philips DD Series (Diamond) Connection 74
CM-4400 Control System Protection Features 43
Alarm Modes 43
Alarms in a Redundant CM-4400 Installation 44
Alarms in a Single CM-4400 Installation 44
Control Module Alarm Circuit 44
Redundant Units 45
Correcting Problems with the Replacement 47
Manually Switching A CM-4400 46
Replacing a Failed Unit 46
Verifying the Replaced Unit Ready for Use 47
Connecting the CM-4400 to the Jupiter LAN 39
CM-4400 Connections 39
Configuring AccuSwitch Control Panel Connections 41
Configuring the AccuSwitch Control Panels Connections
Additional Connections 43
Connection Type 42
Ethernet Switch to System Controller Connection 40
Jupiter File Server Connection 40
Connecting to Multiple Crosspoint Bus Distribution Switchers 62
Connection to Multiple Distribution Switchers with Path Finding 64
Non-sequential Path Finding (Non-sequential Wiring) 66
Sequential Path Finding (Sequential Wiring) 65
Data Router Constraints 68
Dedicated CM-4400 Per Switcher 63
Path Finding with Data Routers 67
Using a Single CM-4400 62

Connecting to Serial Controlled Routers 50
Installing a File Server PC 68
CC 2010 Matrix (Crosspoint Bus) Cable 71
Crosspoint Bus Cables Diagram 71
VDE EMI/RFI Modifications to Matrix Cables 72
Control Panel Installation 70
Jupiter LAN
Printers 69
Remote PC Installation 69
Software Installation 69
Master Control Connection 70
Sync Reference Cables 70
The Jupiter LAN 68
Time Code Connections 70
Installing Redundant CM-4400 Control Modules 48
Jupiter Control of Encore 52
Data Matrix Switching 60
Hardware Connections 61
Software Configuration 61
Logical Level Mapping 60
Non-Redundant Installation 53
Cabling 53
Software Configuration 55
Redundant Installation 55
Double-Y Cable 56
Software Configuration (Redundant Systems) 59
Unpacking and Inspection 37
Rack Mounting 37
Verifying 110 or 230 VAC Selection 37
Help
Board Status – JNS Tools 224
Horizon Matrix Routing Switcher Connections
Software Configuration 288

I

Inadvertent Loss of Power
Troubleshooting 144
Increment Command
AccuSwitch Configuration File 126
Insert a Row
Configurator Editing Guidelines 123
Installing a File Server PC
CC 2010 Matrix (Crosspoint Bus) Cable 71
Crosspoint Bus Cables Diagram 71
VDE EMI/RFI Modifications to Matrix Cables 72
Control Panel Installation 70
Hardware Installation 68
Jupiter LAN
Printers 69
Remote PC Installation 69
Software Installation 69
Master Control Connection 70
Sync Reference Cables 70
The Jupiter LAN 68
Time Code Connections 70
Installing Redundant CM-4400 Control Modules
Hardware Installation 48
Installing the Latest Version
Windows 7 Professional Installation 89
Windows XP Professional Installation 83
Introduction 31
CM-4400 Jupiter AccuSwitch Control System 32
CM-4400 System Controller 31
Control Functions 34
Control Panels 35
Distribution Routing Switcher Control 34
Path Finding Option 34
Remote (Serial Control) Routing switcher Interface Option 34
External Control Protocols 34
File Server (Configuration PC) 35
Jupiter Configuration Editor 36
System Logger 36
Software Control Panels (GUI Control Panel) 35
Ordering Information 36
Overview 31

J

JNS
rebooting 105
JNS Applications Group
JNS Control Console 101
JNS Control Center Tabs
Board Info/Control 230
BOOTP 238
Configuration 233
Activate a Set 234
Perform a Pending Reboot Procedure 235
Reboot Processor 236
Selecting Boards 231

Clear Flash 232
Clear PMEM 232
Post Mortem 232
Probe Connections 233
Reboot 232
Start Board Override 232
Telnet 233
Update Board Info 233
Board Status 229
FTP Status 229
Jupiter Control Center 228
JNS Control Console
Clearing Persistent Memory (PMEM) 107
Launching the Control Console 98
Accessing a Program Within a Group 102
Jupiter Settings Dialog Box 103
Program Groups 100
JNS Applications Group 101
JNS Servers Group 101
JNS Tools Group 101
JNS Utilities Group 101
Overview 97
Restart Procedures 104
Console Port 107
Front Panel Reset Button 106
Power Cycling 107
Selecting the Reboot Option 105
Board Info /Control Tab 105
Configuration Tab 105
JNS Logger and Log Viewer applications 247
JNS programs
Not supported by AccuSwitch 97
JNS Servers Group
JNS Control Console 101
JNS Tools Group
JNS Control Console 101
JNS Utilities Group
JNS Control Console 101
Jupiter Configuration Editor
Introduction 36
Jupiter Control Center 227
JNS Control Center Tabs 228
Board Info/Control 230
BOOTP 238
Configuration 233
Activate a Set 234
Perform a Pending Reboot Procedure 235
Reboot Processor 236
Selecting Boards 231
Clear Flash 232
Clear PMEM 232
Post Mortem 232
Probe Connections 233
Reboot 232
Start Board Override 232
Telnet 233
Update Board Info 233
Board Status 229
FTP Status 229
Menu Commands 228
File Menu 228
Options Menu 228
Overview 227
Jupiter Control of Encore 52
Data Matrix Switching 60
Hardware Connections 61
Software Configuration 61
Hardware Installation 52
Logical Level Mapping 60
Non-Redundant Installation 53
Cabling 53
Software Configuration 55
Redundant Installation 55
Double-Y Cable 56
Software Configuration (Redundant Systems) 59
Jupiter File Server Connection
Hardware Installation 40
Jupiter LAN
Printers
Hardware Installation 69
Remote PC Installation 69
Software Installation 69
Jupiter Naming Rules 130
Jupiter Network Suite Control Console 97
Jupiter Router Control
Enter MPK Information 296
Enter Serial Protocol Information 294
Pro-Bel SW-P-08 Protocol 294
Pro-Bel SW-P-08 Protocol Commands 297
Jupiter Settings Dialog Box
JNS Control Console 103

L

Launching the Control Console

Accessing a Program Within a Group 102
JNS Control Console 98
Jupiter Settings Dialog Box 103
Program Groups 100
JNS Applications Group 101
JNS Servers Group 101
JNS Tools Group 101
JNS Utilities Group 101
Level Numbering and External Control Computers Using ASCII Protocol
Control Panel Level Set 175
Logger and Log Viewer
Overview 247
Run the JNS Log Viewer 249
Dynamic Displays 250
Options 255
Static Displays 252
Adjust Column Widths 255
Date/Time Filter 253
Print/Export a Display 253
Run the JNS Logger 248
L-S or LCD Panels Entries
MPK Devices Table 193

M

Manually Switching A CM-4400
CM-4400 Control System Protection Features 46
Master Control Connection
Hardware Installation 70
Materials Supplied
Software Installation 80
Matrix Router Control Buses
Automation Interface Protocols 283
Connecting Other Routers 283
Datatek D-2000/2166 Connections
Software Configuration 289
Horizon Matrix Routing Switcher Connections
Software Configuration 288
Nexus Audio Routing System
Software Configuration 292
Physical IO Limits 284
Serial Control Routing Switcher Protocols 284
SMS 7000 Connections 286
Support for Wild Card Characters in the ES LAN Protocol 284
Supported Protocols 283
Supported Routers 283
Triton Systems 285
Utah Scientific Party Line Connection Using UDI-1B
Software Configuration 290
Matrix Routing Switcher Control Buses
Electrical 278
Maximum Number of Logical Levels
File Server Minimum Specifications 280
Menu Bar
Force Unlock 244
Menu Commands
File Menu 228
Jupiter Control Center 228
Options Menu 228
Menus
Board Status – JNS Tools 223
File 223
Help 224
Options 224
Mismatch Indicator
Configuration Set Management 141
Modify and Download Configuration Set
Configuration Set Management 131
MPK Devices Table
Configurator Application 190
Configure Control Panel for Full-matrix, Multi-bus, or Single-bus Control 192
L-S or LCD Panels Entries 193
MPK Devices Table Description 191
Zero-Downtime Feature 192
MPK Devices table 190
MPK Devices Table Description
MPK Devices Table 191
MPK Devices Tables
CP Input Sets–SYS1 Server 217
CP Input Sets–SYS2 Server 219
CP Output Sets–SYS1 Server 220
CP Output Sets–SYS2 Server 221
Remote System Routing 215
Switcher Input Tables–SYS1 Server 216
Switcher Input Tables–SYS2 Server 218
Switcher Output Tables–SYS1 Server 219
Switcher Output Tables–SYS2 Server 220

N

Naming Rules

AccuSwitch Configuration File 130
Navigate and Copy Rows
AccuSwitch Configuration File 123
Network Description Table
Automatic Table Entry Feature 151
Configurator Application 151
Enter Controller Board Descriptions 152
Network Description Tables
Remote System Routing 210
System 1 Server 211
System 2 Server 211
Nexus Audio Routing System
Software Configuration 292
Non-Redundant Installation
Cabling 53
Hardware Installation 53
Software Configuration 55
Non-sequential Path Finding (Non-sequential Wiring)
Connection to Multiple Distribution Switchers with Path Finding 66
Non-Sequential Path Finding table 200
Non-sequential Path Finding Table
Path Finding Between Analog and Digital Equipment 200

O

online documentation 4
On-line Help
Troubleshooting 144
Optional Entries
Control Panel Sets Dialog Box 181
Options
Board Status – JNS Tools 224
Run the JNS Log Viewer 255
Options Menu
Jupiter Control Center 228
Ordering Information
Introduction 36
Other Codes
CM-4400 System Codes 271
Overview
ASCII Communications Protocol 273
Board Status – JNS Tools 223
Configurator Application 109
Force Unlock 243
Introduction 31
JNS Control Console 97
Jupiter Control Center 227
Logger and Log Viewer 247
Passwords 144
Router Control Application 239

P

P08 (SW-P-08 Control Panel)
Pro-Bel SW-P-08 Protocol 302
P8R (SW-P-08 Router Control)
Pro-Bel SW-P-08 Protocol 301
Passwords
Change Password 147
Configurator Application 144
Force Unprotect/Unlock 150
Set Control Panel Password Levels 149
Set Switcher Output Password Levels 150
Setting Password Levels for Switcher Outputs 150
Path Finding
Remote System Routing 221
Path Finding – Three or More Switchers
Alternate Routes – Manual Selection 197
Sequential Path Finding Table 196
Table Entries 197
Path Finding Between Analog and Digital Equipment
Configurator Application 198
Convert Analog Signals to Combined Digital Signals 198
Non-sequential Path Finding Table 200
Path Finding Option
Introduction 34
Path Finding with Data Routers
Hardware Installation 67
PC 3000 File Server
Equipment Dimensions 280
Pending Reboot
Configuration Set Management 137
Perform a Pending Reboot Procedure
JNS Control Center Tabs 235
Perform Takes
Router Control Application 241
Physical IO Limits
Matrix Router Control Buses 284

Physical Serial Interface
Connecting Other Routers 303
Point-to-Point Switching
Configurator Application 207
SAFE input 208
Switching Router Options 207
Post Mortem
JNS Control Center Tabs 232
Power Cycling
Restart Procedures 107
Print/Export a Display
Run the JNS Log Viewer 253
Printers
Jupiter LAN
Software 69
Printing
Troubleshooting 144
Probe Connections
JNS Control Center Tabs 233
Pro-Bel SW-P-08 Interface Implementation Notes
P08 (SW-P-08 Control Panel) 302
P8R (SW-P-08 Router Control) 301
Pro-Bel SW-P-08 Protocol 301
Pro-Bel SW-P-08 Protocol
Connecting Other Routers 293
Jupiter Router Control 294
Enter MPK Information 296
Enter Serial Protocol Information 294
Pro-Bel SW-P-08 Protocol Commands 297
Pro-Bel SW-P-08 Interface Implementation Notes 301
P08 (SW-P-08 Control Panel) 302
P8R (SW-P-08 Router Control) 301
Remote Router Control 297
Determine Protocol Matrix and Level 298
Enter Serial Protocol information 300
Remote Router Values 299
Pro-Bel SW-P-08 Protocol Commands
Pro-Bel SW-P-08 Protocol 297
Program Crash Recovery
Troubleshooting 143
Program Groups
JNS Applications Group 101
JNS Control Console 100
JNS Servers Group 101
JNS Tools Group 101
JNS Utilities Group 101

R

Rack Mounting
Hardware Installation 37
Reboot
JNS Control Center Tabs 232
Reboot Processor
JNS Control Center Tabs 236
Red LEDs
CM-4400 Crosspoint Buffer and Interface 258
Redundant Installation
Double-Y Cable 56
Software Configuration (Redundant Systems) 59
Redundant Units
CM-4400 Control System Protection Features 45
Correcting Problems with the Replacement 47
Manually Switching A CM-4400 46
Replacing a Failed Unit 46
Verifying the Replaced Unit Ready for Use 47
Regulatory
Certifications and Compliances 21
Regulatory Notices 21
Remote 208
Remote (Serial Control) Routing switcher Interface Option
Introduction 34
Remote PC Installation Jupiter LAN 69
Remote Router Control
Determine Protocol Matrix and Level 298
Enter Serial Protocol information 300
Pro-Bel SW-P-08 Protocol 297
Remote Router Values 299
Remote Router Values
Remote Router Control 299
Remote System Routing
AccuSwitch Software Configuration 210
CP Level Set Tables 215
MPK Devices Tables 215
CP Input Sets–SYS1 Server 217
CP Input Sets–SYS2 Server 219
CP Output Sets–SYS1 Server 220
CP Output Sets–SYS2 Server 221
Switcher Input Tables–SYS1 Server 216

Switcher Input Tables–SYS2 Server 218
Switcher Output Tables–SYS1 Server 219
Switcher Output Tables–SYS2 Server 220
Network Description Tables 210
System 1 Server 211
System 2 Server 211
Path Finding 221
Switcher Description Tables 212
SYS1 212
SYS2 214
Configurator Application 208
Remote System Routing Characteristics 210
Remote System Routing Characteristics
Remote System Routing 210
Removing Jupiter Software
Software Installation 95
Removing the Previous Version
Software Installation 81
Re-order a Table
Configurator Editing Guidelines 124
Reorder Jupiter Tables
AccuSwitch Configuration File 123
Copy and Paste Rows 124
Delete a Row 124
Insert a Row 123
Re-order a Table 124
Replacing a Failed Unit
CM-4400 Control System Protection Features 46
Restart Procedures
Console Port 107
Front Panel Reset Button 106
JNS Control Console 104
Power Cycling 107
Selecting the Reboot Option 105
Board Info /Control Tab 105
Configuration Tab 105
Router Control Application
Display Status 240
Overview 239
Perform Takes 241
Router Control Center application 239
Routing Switcher Requirements
Hardware Installation 73
Run the JNS Log Viewer
Dynamic Displays 250
Logger and Log Viewer 249
Options 255
Static Displays 252
Adjust Column Widths 255
Date/Time Filter 253
Print/Export a Display 253
Run the JNS Logger
Logger and Log Viewer 248

S

SAFE input
Point-to-Point Switching 208
Safety
Cautions 11
Safety Terms and Symbols 9
Warnings 10
Safety Summary 9
Saturn Video Processor – Entry for MPK Port
Serial Protocol Table 156
Security
Switcher Output Table 170
Selecting Boards
Clear Flash 232
Clear PMEM 232
JNS Control Center Tabs 231
Post Mortem 232
Probe Connections 233
Reboot 232
Start Board Override 232
Telnet 233
Update Board Info 233
Selecting the Reboot Option
Board Info /Control Tab 105
Configuration Tab 105
Restart Procedures 105
Sequential Path Finding (Sequential Wiring)
Connection to Multiple Distribution Switchers with Path Finding 65
Sequential Path Finding Table
Configurator Application 193
Path Finding – Three or More Switchers 196
Table Entries 197
Serial Control Routing Switcher Protocols
Matrix Router Control Buses 284
Serial Protocol Selection Options
Serial Protocol Table 155
Serial Protocol Table
Configurator Application 153

Enter Controller Board Protocol 155
Additional Protocol Notes 156
Serial Protocol Selection Options 155
Saturn Video Processor – Entry for MPK Port 156
Set Control Panel Password Levels
Passwords 149
Set Switcher Output Password Levels
Passwords 150
Switcher Output Table 171
Shutdown Codes
CM-4400 System Codes 270
SMS 7000 Connections
Matrix Router Control Buses 286
Software Configuration
Hardware Installation 55, 61
Software Configuration (Redundant Systems)
Hardware Installation 59
Software Control Panels (GUI Control Panel)
Introduction 35
software download from web 4
Software Installation
Caveats 79
Equipment Required 80
Materials Supplied 80
Removing Jupiter Software 95
Software Required 80
Software Update
Installing the Latest Version
Windows 7 Professional Installation 89
Windows XP Professional Installation 83
Removing the Previous Version 81
Software Required
File Server Minimum Specifications 279
Software Installation 80
Software Update
Installing the Latest Version
Windows 7 Professional Installation 89
Windows XP Professional Installation 83
Removing the Previous Version 81
Split Switching
Switcher Input Table 164
Start Board Override
JNS Control Center Tabs 232
Starting the Configurator Application
Configurator Application 109
Startup Codes
CM-4400 System Codes 270
Static Displays
Adjust Column Widths 255
Date/Time Filter 253
Print/Export a Display 253
Run the JNS Log Viewer 252
Support for Wild Card Characters in the ES LAN Protocol
Matrix Router Control Buses 284
Supported Data Routers
ASCII Communications Protocol 282
Supported Protocols
Matrix Router Control Buses 283
Supported Routers
Matrix Router Control Buses 283
Switcher Description Tables
AccuSwitch Software Configuration 212
SYS1 212
SYS2 214
Switcher Input Table
Configurator Application 163
Enter/Edit Input Names and Numbers 165
CP Input/Output Sets and Control Panel Operation 169
Data Switching Applications 166, 167
Split Switching 164
Switcher Input Tables–SYS1 Server
AccuSwitch Software Configuration 216
Switcher Input Tables–SYS2 Server
AccuSwitch Software Configuration 218
Switcher Level Descriptions
Configurator Application 157
Switcher Output Table
Configurator Application 169
Enter/Edit Output Names and Numbers 170
Security 170
Set Switcher Output Password Levels 171
Switcher Output Tables–SYS1 Server
AccuSwitch Software Configuration 219
Switcher Output Tables–SYS2 Server
AccuSwitch Software Configuration 220
Switching Router Options
Point-to-Point Switching 207
Sync Reference Cables
Hardware Installation 70
SYS1
AccuSwitch Software Configuration 212

SYS2
AccuSwitch Software Configuration 214
System 1 Server
AccuSwitch Software Configuration 211
System 2 Server
AccuSwitch Software Configuration 211
System Limitations
Calculating Loading 281
Calculating Loading Example 282
CM-4400 Serial Bus Loading 281
File Server Minimum Specifications 280
Maximum Number of Logical Levels 280
System Logger
Introduction 36

T

Table Description
Board Status – JNS Tools 224
Force Unlock 243
Table Entries
Sequential Path Finding Table 197
Telnet
JNS Control Center Tabs 233
The Jupiter LAN
Hardware Installation 68
Thomson/Philips DD Series (Diamond) Connection
Hardware Installation 74
Time Code Connections
Hardware Installation 70
Time Standard Table
Configurator Application 203
Set Time Code Information 203
Time Standard Table Description 204
Use Numeric Sets for Quick Switcher Checkout 205
Time Standard table 203
Time Standard Table Description
Time Standard Table 204
Triton Systems
Matrix Router Control Buses 285
Troubleshooting
CM-4400 Checklist 257
CM-4400 Crosspoint Buffer and Interface 258
Green LEDs 259
Red LEDs 258
CM-4400 System Codes 259
Error Codes 259
Other Codes 271
Shutdown Codes 270
Startup Codes 270
Configurator Application 143
Disconnect File Server from LAN 144
Error Conditions 143
Inadvertent Loss of Power 144
On-line Help 144
Printing 144
Program Crash Recovery 143
ZIP a Configuration Set with Diagnostic Information (Support Package) 143
Zipping a Configuration Set 143

U

Unlock and Un-protect
Force Unlock 244
Unlock and Un-protect an Individual Output
Unlock and Un-protect 245
Unlock and Un-protect an Output
Unlock and Un-protect 244
Unpacking and Inspection
Hardware Installation 37
Rack Mounting 37
Verifying 110 or 230 VAC Selection 37
Unzip, Open, Edit, and Compile the Configuration Set
AccuSwitch Configuration File 118
Update Board Info
JNS Control Center Tabs 233
Upload a Configuration File
AccuSwitch Configuration File 115
Use Numeric Sets for Quick Switcher Checkout
Configuration Set Management 134
Time Standard Table 205
Using a Single CM-4400
Hardware Installation 62
Utah Scientific Party Line Connection Using UDI-1B
Software Configuration 290

V

Validate, Compile, and Activate (Downloading) Configuration Set

Configurator Application 135
VDE EMI/RFI Modifications to Matrix Cables
CC 2010 Matrix (Crosspoint Bus) Cable 72
Verifying 110 or 230 VAC Selection
Hardware Installation 37
Verifying the Replaced Unit Ready for Use
CM-4400 Control System Protection Features 47
Video Reference Table
Configurator Application 206
Video Reference table 206

W

web site documentation 4
web site FAQ database 4
web site Grass Valley 4
web site software download 4
Windows 7 Professional Installation
Software Installation 89
Windows XP Professional Installation
Software Installation 83

Z

Zero-Downtime Feature
MPK Devices Table 192
ZIP a Configuration Set with Diagnostic Information (Support Package)
Troubleshooting 143