Kaleido-Modular-X

High picture count, ultra-flexible and scalable multiviewer

Hardware Description & Installation Manual

M933-9802-105

16 December 2014

grass valley
A BELDEN BRAND

Copyright & Trademark Notice

Copyright © 2013–2014, Grass Valley USA, LLC. All rights reserved.

Belden, Belden Sending All The Right Signals, and the Belden logo are trademarks or registered trademarks of Belden Inc. or its affiliated companies in the United States and other jurisdictions. Grass Valley, Miranda, Kaleido-Modular-X, iControl, NVISION, and Densité are trademarks or registered trademarks of Grass Valley USA, LLC. Belden Inc., Grass Valley USA, LLC, and other parties may also have trademark rights in other terms used herein.

Terms and Conditions

Please read the following terms and conditions carefully. By using Kaleido multiviewer documentation, you agree to the following terms and conditions.

Grass Valley hereby grants permission and license to owners of Kaleido multiviewers to use their product manuals for their own internal business use. Manuals for Grass Valley products may not be reproduced or transmitted in any form or by any means, electronic or mechanical, including photocopying and recording, for any purpose unless specifically authorized in writing by Grass Valley.

A Grass Valley manual may have been revised to reflect changes made to the product during its manufacturing life. Thus, different versions of a manual may exist for any given product. Care should be taken to ensure that one obtains the proper manual version for a specific product serial number.

Information in this document is subject to change without notice and does not represent a commitment on the part of Grass Valley.

Warranty information is available in the Support section of the Grass Valley Web site (www.grassvalley.com).

The SDHC Logo is a trademark of SD-3C, LLC.

Title	Kaleido-Modular-X Hardware Description & Installation Manual
Part Number	M933-9802-105
Revision	16 December 2014, 2:27 pm

Electrostatic Discharge (ESD) Protection

Electrostatic discharge occurs when electronic components are improperly handled and can result in intermittent failure or complete damage adversely affecting an electrical circuit. When you remove and replace any card from a frame always follow ESD-prevention procedures:

- Ensure that the frame is electrically connected to earth ground through the power cord or any other means if available.
- Wear an ESD wrist strap ensuring that it makes good skin contact. Connect the grounding clip to an *unpainted surface* of the chassis frame to safely ground unwanted ESD voltages. If no wrist strap is available, ground yourself by touching the *unpainted* metal part of the chassis.
- For safety, periodically check the resistance value of the antistatic strap, which should be between 1 and 10 megohms.
- When temporarily storing a card make sure it is placed in an ESD bag.
- Cards in an earth grounded metal frame or casing do not require any special ESD protection.

Protection contre les décharges électrostatiques (DES)

Une décharge électrostatique peut se produire lorsque des composants électroniques ne sont pas manipulés de manière adéquate, ce qui peut entraîner des défaillances intermittentes ou endommager irrémédiablement un circuit électrique. Au moment de remplacer une carte dans un châssis, prenez toujours les mesures de protection antistatique appropriées :

- Assurez-vous que le châssis est relié électriquement à la terre par le cordon d'alimentation ou tout autre moyen disponible.
- Portez un bracelet antistatique et assurez-vous qu'il est bien en contact avec la peau. Connectez la pince de masse à une *surface non peinte* du châssis pour détourner à la terre toute tension électrostatique indésirable. En l'absence de bracelet antistatique, déchargez l'électricité statique de votre corps en touchant une surface métallique *non peinte* du châssis.
- Pour plus de sécurité, vérifiez périodiquement la valeur de résistance du bracelet antistatique. Elle doit se situer entre 1 et 10 mégohms.
- Si vous devez mettre une carte de côté, assurez-vous de la ranger dans un sac protecteur antistatique.
- Les cartes qui sont reliées à un châssis ou boîtier métallique mis à la terre ne nécessitent pas de protection antistatique spéciale.

Recycling

Visit www.grassvalley.com for recycling information.

Electromagnetic Compatibility

This equipment has been tested for verification of compliance with FCC Part 15, Subpart B requirements for class A digital devices.

Note: This equipment has been tested and found to comply with the limits for a Class A digital device, pursuant to Part 15 of the FCC rules. These limits are designed to provide reasonable protection against harmful interference when the equipment is operated in a commercial environment. This equipment generates, uses, and can radiate radio frequency energy, and, if not installed and used in accordance with the instruction manual, may cause harmful interference to radio communications. Operation of this equipment in a residential area is likely to cause harmful interference in which case the user will be required to correct the interference at his own expense.

This equipment has been tested and found to comply with the requirements of the EMC directive 2004/108/EC:

- EN 55022 Class A Radiated and conducted emissions
- EN 61000-3-2 Limits for harmonic current emissions
- EN 61000-3-3 Limitation of voltage fluctuations and flicker
- EN 61000-4-2 Electrostatic discharge immunity
- EN 61000-4-3 Radiated, radio-frequency, electromagnetic field immunity
- EN 61000-4-4 Electrical fast transient immunity
- EN 61000-4-5 Surge transient immunity
- EN 61000-4-6 Conducted disturbances immunity
- EN 61000-4-11 Voltage dips, short interruptions and voltage variations immunity

Table of Contents

1 Installation 1

Introduction 1
- Features 1
- Available Options 2
- Overview of the Kaleido-Modular-X System 2
- Physical Interface 5

Mechanical Installation 7
- Unpacking 7
- Installation in the Densité Frame 9
- Ventilation 9

Signalling 10
- Output Cards 10
- Input Cards 14
- 4K UHD Prescaler 19
- GPI-1501 General Purpose Interface I/O Module 20

Maintenance 21
- Handling the Front Door 21
- Replacing Cards 22
- 4K UHD Prescaler Configuration and Upgrade 25
- Replacing the CPU-ETH2 Controller Card 26
- Replacing a GPI-1501 Card 27
- Replacing Power Supply Modules 27
- Replacing Frame Ventilation Fans 28
- Replacing the Air Filter 30

2 Operation 31

LED Interface 32
- KMX-3901-IN Input Card Interface 32
- 4K UHD Prescaler Card Interface 34
- KMX-3901-OUT Output Card Interface 35

Using the Densité Frame Control Panel 37
- Navigating the Local Control Panel Menu 38
- Local Control Panel Menu Structure 38

Remote Control Using iControl 40
- Kaleido-Modular-X Service Control Panels in iControl 40
- Output Settings Panel 42
- Network Settings Panel 43
- Info Panel 44

3 Specifications 47

Kaleido-Modular-X Input Cards 47
- Video Inputs 47
- Discrete Audio Inputs 48
- FlexBridge Inputs/Outputs 49
- Control 49
- Electrical 50
- Physical 50

Kaleido-Modular-X 4K UHD Prescaler Cards 50
Kaleido-Modular-X Output Cards 52
- Mosaic Outputs 52
- SDI Monitoring Outputs 52
- Analog Audio Outputs 53
- FlexBridge Inputs 53
- Communication 54
- Electrical 54
- Physical 54

GPI-1501 GPI I/O module 55

Contact Us 57

1 Installation

The Kaleido-Modular-X offers a flexible and scalable multiviewer solution for TV production optimized for the space, power and weight considerations found in studios and outside broadcast trucks.

Introduction

The Kaleido-Modular-X supports up to 64 video inputs, and up to four multiviewer outputs.

Features

Kaleido-Modular-X features

Space-efficient modular design	Modular design offers wide range of input/output configurations, with optional separation of input and output stages for streamlined, cost-saving cabling and optimization of space usage. Standard Densité frame housing enables *mix-and-match* capability of multiviewers with signal processing modules, URS frame reference, and GPI I/O via GPI-1501 cards.
Unique FlexBridge technology	Flexible coax cable bridging between input modules, and to the output modules. Expand your multiviewer beyond the number of slots within a single frame by bridging additional input or output modules housed in a different frame. Install the input stage next to the router and the output stage next to the displays to eliminate the HDMI extenders. More robust than cascading, with bypass relay protection to remain on air even when removing a module.
Unmatched image quality	Unmatched multiviewer picture quality, and superior on-screen graphics. Simultaneous HDMI and SDI outputs at full 1080p 50/60Hz resolution on up to four multiviewer displays. Input signal processing up to 3 Gbps signal formats. Natively capable of handling 4K UHD quad-link sources seamlessly recombining them into a pixel perfect image.
Robust and serviceable design	Hot swappable cards with unique auto-recovery feature, which provides fast automated recovery after a *cold* spare is inserted. 1 RU and 3 RU Densité frame housing, with redundant power supplies, and quiet cooling.
Multi-room, multi-user oriented	A single Kaleido-Modular-X multiviewer can be used to share sources across multiple rooms or operator positions, with fully independent displays, audio monitoring and control panels dedicated to each operator.

Kaleido-Modular-X features *(continued)*

Seamless control across multiple multiviewers	Kaleido multiviewers can be *mixed and matched* to create a seamless monitoring system across a facility. Choice of control options such as the standalone Kaleido-RCP2 or RCP-200 panels, integrated with router control systems and panels, iControl, and third-party control systems.
Superior layout flexibility	Unlimited signal repetition at any sizes across all displays, without blocking, grouping restrictions or bandwidth restrictions.
Router and switcher integration	Fast and easy NVISION router to multiviewer installation with M3 integration cable, which also offers space and weight reductions. The Kaleido-Modular-X integrates with the NVISION router family, and third-party routers and production switchers for tally and label/alias source management. Multiple multiviewers can be controlled from a single control panel.
Scalable for the largest systems	Virtually limitless multiviewer system expansion with upstream NVISION router. A combined multiviewer/router system may include up to 1152 video inputs, and 288 multiviewer outputs.

Available Options

- Second power supply for redundant power security
- GPI-1501 GPI I/O module
- REF-1801 reference card
- Rear connector panels compatible with the M3 3 Gbps router integration cable (two models available: one for the KMX-3901-IN-16-D, one for the KMX-3901-IN-16-Q input cards)
- KMX-3901-OUT-D-3+SRP rear connector panel for the KMX-3901-OUT output cards (compatible with the Densité 3+ FR1 housing frame only)

Overview of the Kaleido-Modular-X System

Kaleido-Modular-X modules are interconnected using standard coax cables. FlexBridge connections are used to connect an input card to an output card, or to another input card as shown in the 32×4 configuration below. Up to four input and two output modules can be combined for multiviewer sizes of up to 64×4. KMX-3901-IN modules are available with two or four FlexBridge connectors for bridging to one or two KMX-3901-OUT output modules: two FlexBridge connections per KMX-3901-OUT are required.

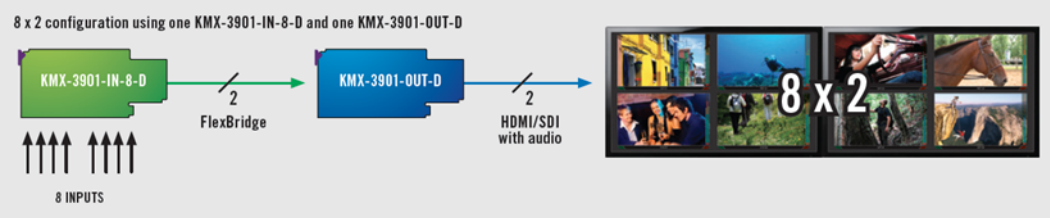

Kaleido-Modular-X configuration with 8 inputs and 2 outputs

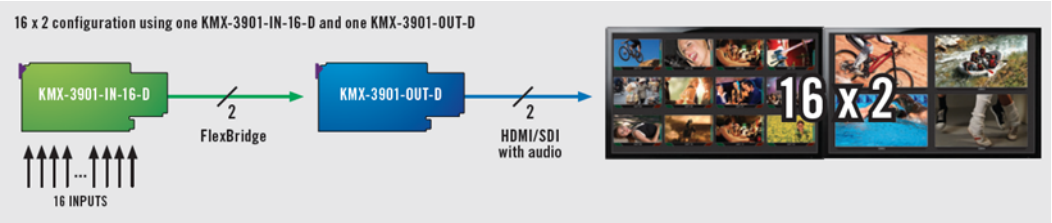

Kaleido-Modular-X configuration with 16 inputs and 2 outputs

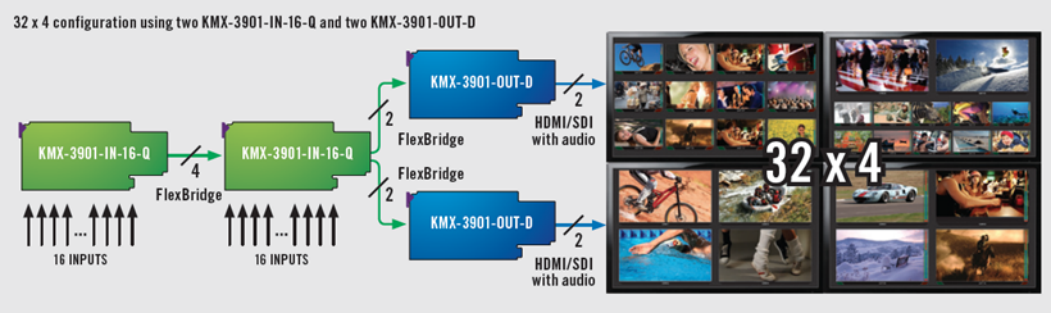

Kaleido-Modular-X configuration with 32 inputs and 4 outputs

Kaleido-Modular-X input and output modules can be housed in the same physical Densité frame, or in multiple frames, allowing expansion beyond the number of slots available within a single frame.

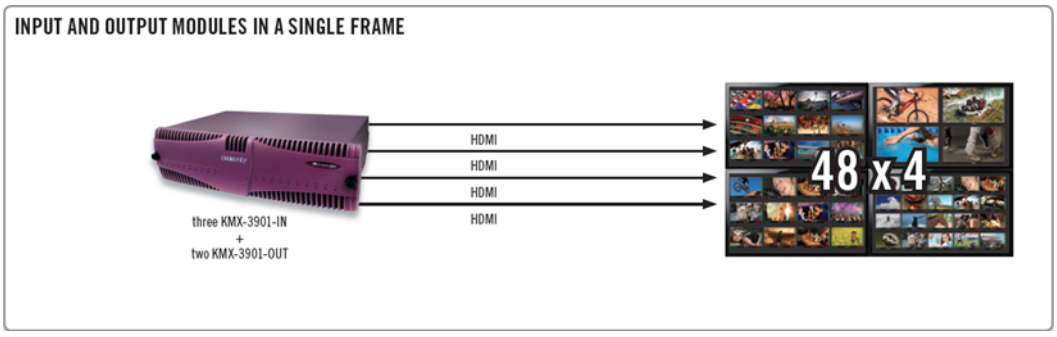

Kaleido-Modular-X single-frame configuration with 48 inputs and 4 outputs

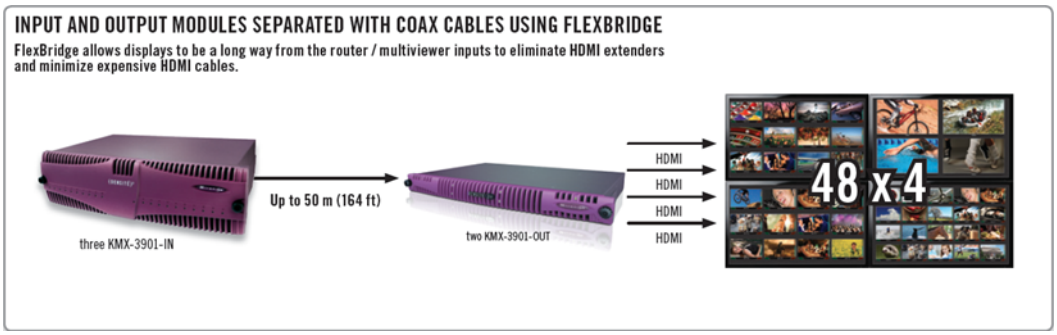

Kaleido-Modular-X distributed configuration with 48 inputs and 4outputs

Input module parts	Description
KMX-3901-IN-8-D	8 input HD/SD-SDI and 3 Gbps input module with dual FlexBridge outputs.
KMX-3901-IN-8-D-3TRP	Triple rear connector panel with bypass relay.
KMX-3901-IN-16-D	16 input HD/SD-SDI and 3 Gbps input module with dual FlexBridge outputs.
KMX-3901-IN-16-D-3QRP	Quadruple rear connector panel with bypass relay.
KMX-3901-IN-16-Q	16 input HD/SD-SDI and 3 Gbps input module with quad FlexBridge outputs. convertible to a 4K UHD prescaler.
KMX-3901-IN-16-Q-3PRP	Quintuple rear connector panel with bypass relay.

M3 module parts	Description
KMX-3901-IN-M3-D-3PRP	Quadruple rear connector panel with bypass relay for the M3 cable. Use with KMX-3901-IN-16-D.
KMX-3901-IN-M3-Q-3PRP	Quintuple rear connector panel with bypass relay for the M3 cable. Use with KMX-3901-IN-16-Q.

Output module parts	Description
KMX-3901-OUT-S	Single head output module, upgradable to dual head outputs.
KMX-3901-OUT-D	Dual head output module.
KMX-3901-OUT-D-3DRP	Double rear connector panel.
KMX-3901-OUT-D-3+SRP	Single rear connector panel. Compatible with Densité 3+ FR1 only.

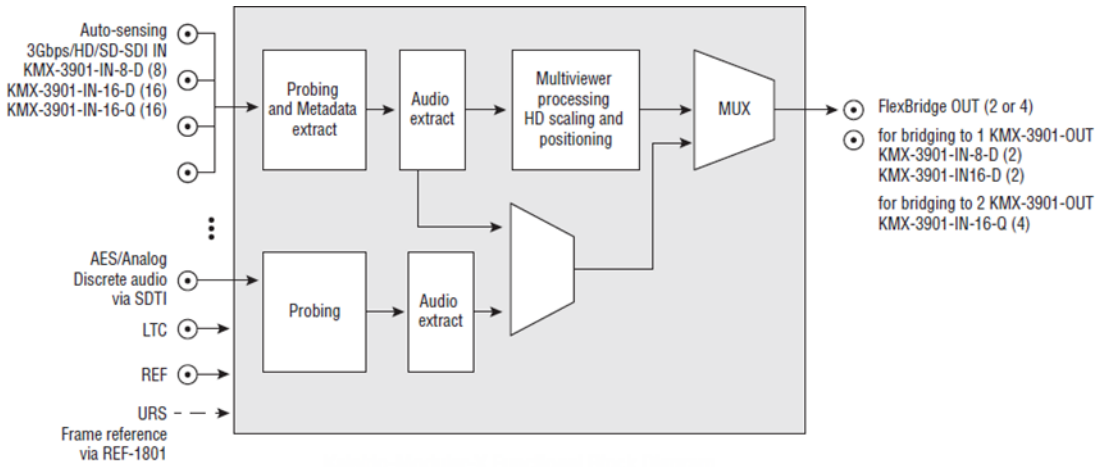

Kaleido-Modular-X functional block diagram: KMX-3901-IN input modules (KMX-3901-IN-8-D, KMX-3901-IN-16-D, and KMX-3901-IN-16-Q)

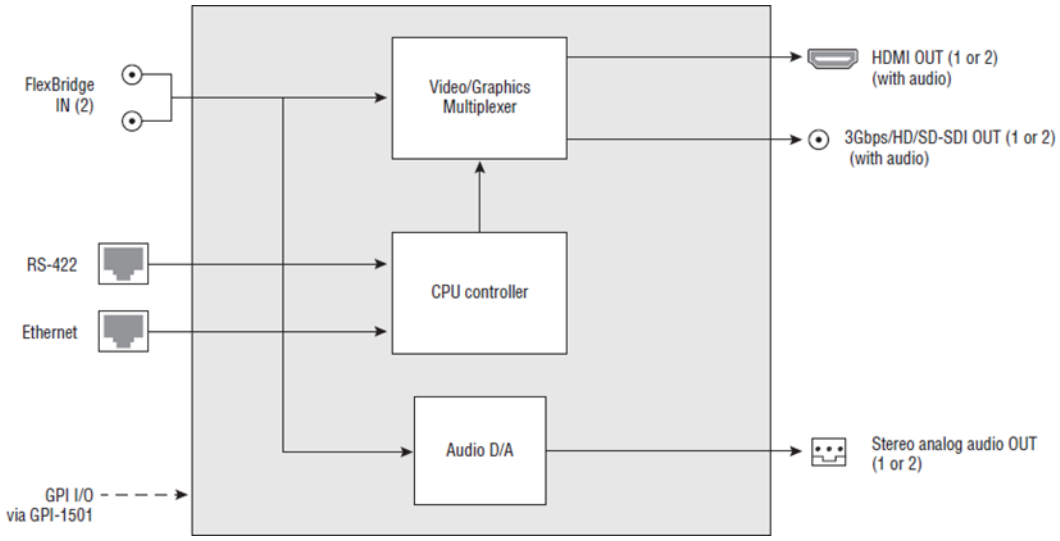

Kaleido-Modular-X functional block diagram: KMX-3901-OUT output modules (KMX-390-OUT-D, and KMX-3901-OUT-S)

Physical Interface

Frame interface

When the frame door is closed, the status LED on each of the cards in the frame is visible via a light pipe in the door. No other controls or indicators are present.

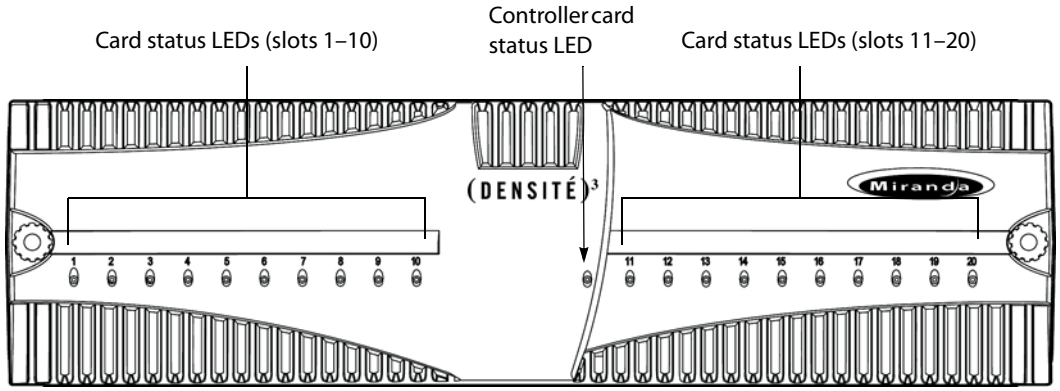

Front of Densité 3 frame

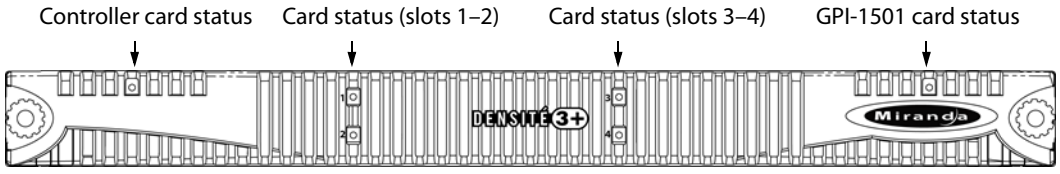

Front of Densité 3+ FR1 frame

Front card-edge interface

The front card edges of the Kaleido-Modular-X input and output modules incorporate several operational elements. See KMX-3901-IN Input Card Interface on page 32, and KMX-

3901-OUT Output Card Interface, on page 35, for more information.

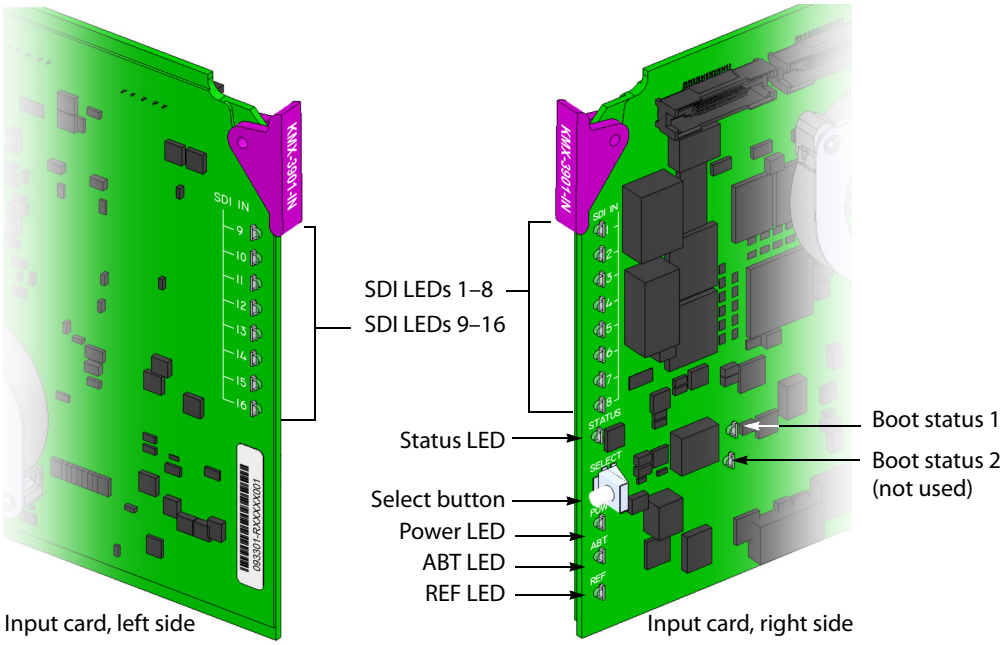

Summary view of the interface on the left side, and on the right side of a KMX-3901-IN input card

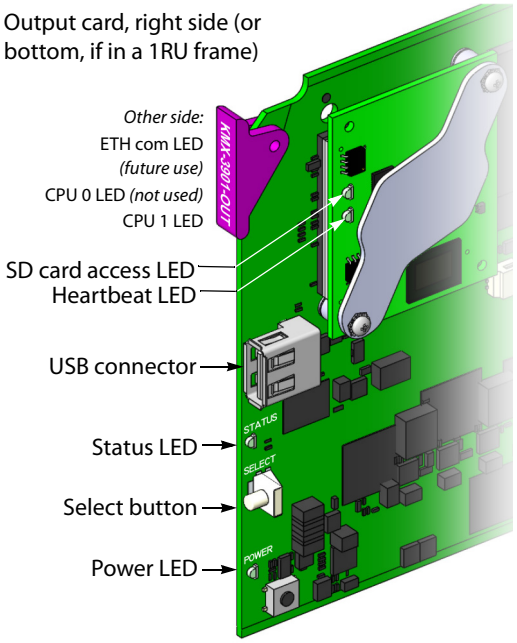

Summary view of the interface on a KMX-3901-OUT output card edge

Mechanical Installation

Unpacking

Make sure the following items have been shipped with your Kaleido-Modular-X order. If any of these are missing, contact your distributor or Grass Valley (see Contact Us, on page 57).

- 1–4 KMX-3901-IN input cards with matching rear modules, as per order (see Input module parts, on page 4)
- 1–4 KMX-3901-IN-M3 rear modules, M3 cables, and NVISION router-side rears, as per order (see M3 module parts, on page 4)
- 1 or 2 KMX-3901-OUT output cards, with rear modules, as per order (see Output module parts, on page 4)
- 1–16 12-inch FlexBridge cables (DIN-DIN coax cables), as per order

Model	FlexBridge
8 × 1	1
8 × 2	2
16 × 1	1
16 × 2	2
16 ×4	4

Model	FlexBridge
24 × 1	2
24 × 2	4
32 × 2	4
32 × 4	8

Model	FlexBridge
48 × 2	6
48 × 4	12
64 × 2	8
64 × 4	16

- 2 WECO analog audio mating connectors for each output card
- 2 serial port adapters (1 with straight cabling and 1 with crossover cabling — see RS-422 connection diagram, on page 11) for every output card ordered with a double rear connector panel

Part number	Adapter cabling	RS-422 pinout at the DE-9P connector
1737-3000-102	Straight	Controller (SMPTE master) mode
1792-3700-100	Crossover	Tributary (SMPTE slave) mode

> Note: The single rear connector panel KMX-3901-OUT-D-3+SRP does not have a serial port. To support a serial device, your Kaleido-Modular-X system must have at least one output card with a double rear connector panel (KMX-3901-OUT-D-3DRP).

- The Kaleido-Modular-X Quick Start Guide, which provides detailed instructions on installing cards and their associated rear panels for your initial deployment
- DVD including the Release Notes for the current version of the Kaleido-X software, the Kaleido-X User's Manual, database samples, Quick Start guides and hardware reference manuals for all multiviewer models

Note: In line with our commitment to environmental preservation, only the Quick Start Guide for your multiviewer model, and some ancillary documents (e.g. welcome letters, warranty cards) are distributed in printed form. All manuals and the Release Notes are available on the DVD that shipped with your multiviewer. See the *Documentation* section of the Release Notes for a complete list. You can obtain the latest version of the manuals, the Release Notes, as well as software and useful data, from the *Software and documentation* section of Grass Valley's support portal.

In addition to the above, you will need the following (not supplied):

- At least one Densité 3 housing frame
- For a quad-head system with 64 inputs, or if you wish to have separate input and output stages, then you will also need a separate Densité 3 or Densité 3+ FR1 frame to house your output cards

Note: Output cards with a single rear connector panel (KMX-3901-OUT-D-3+SRP) are compatible with Densité 3+ FR1 only.

- A Densité CPU-ETH2 controller card for each housing frame

  (Optionally: a GPI-1501 GPI I/O module, a REF-1801 HD/SD frame reference module)
- Up to 4 displays
- A dedicated 100Base-T Ethernet switch with enough ports for the KMX-3901-OUT output cards, the housing frames' Densité CPU-ETH2 controller cards, client PCs, Kaleido-RCP2 units, and Audio Bridge Terminals
- Client PC (see below for system requirements)
- Cables (to connect your multiviewer to video sources, to displays, and to the network):

Cable type	Purpose
CAT-5	For Ethernet connectivity
Display cables	Either standard HDMI cables, or extension modules. For example Grass Valley's DXF-200 DVI/HDMI Optical Extension System: • part number DXF-200-B, for output cards with a double rear connector panel (KMX-3901-OUT-D-3DRP) • part number DXF-200-C, for output cards with a single rear connector panel (KMX-3901-OUT-D-3+SRP)
Video cables	Standard coaxial cables with DIN 1.0/2.3 connectors

Note: On all Kaleido multiviewers, the network adapters are set to auto-negotiate. By default, the connection speed and duplex mode will be set automatically based on the corresponding port settings on the switch.

Installation in the Densité Frame

The KMX-3901-IN input cards, the KMX-3901-OUT output cards and their associated rear connector panels must be installed in a Densité 3 frame. Output cards and their rear panel may also be installed in a Densité 3+ FR1 frame. It is not necessary to switch off the frame's power when installing or removing a card. For detailed instructions on installing cards and their associated rear panels for initial deployment, please consult the Kaleido-Modular-X Quick Start Guide that shipped with your system.

Ventilation

In a **Densité 3** frame, ventilation for the frame is provided by a fan mounted in the center of the rear panel. In a **Densité 3+ FR1** frame, ventilation is provided by two fans, one located at each end of the rear panel.The fans draw air through the frame and exhaust it to the rear. Ventilation slots in the front panel allow air to flow into the frame, and an air filter is mounted in the frame door.

> IMPORTANT
> To ensure proper cooling, the front panel of the Densité frame must be closed at all times when cards are installed and operating.

The frame-mounted fans are supplemented by thermostatically-controlled fans mounted in each power supply. They are not field-serviceable.

Ensure that the front panel ventilation slots are not obstructed. Check the air filter regularly to ensure that it is not plugged up with debris. The filter may be cleaned by rinsing in warm water. Dry thoroughly before replacing it in the frame. See Replacing the Air Filter on page 30, for details.

Densité 3+ FR1 fan speed control

On the Densité 3+ FR1 frame's rear panel, a slider switch beside the controller-side fan allows the speed of the two rear-panel fans to be specified by the user. Two settings are provided:

- FULL – The fans operate at top speed at all times.
- VAR – The fan speed is managed by the controller card, which is monitoring the temperature inside the frame. This is the factory-default setting, and it is appropriate for most situations.

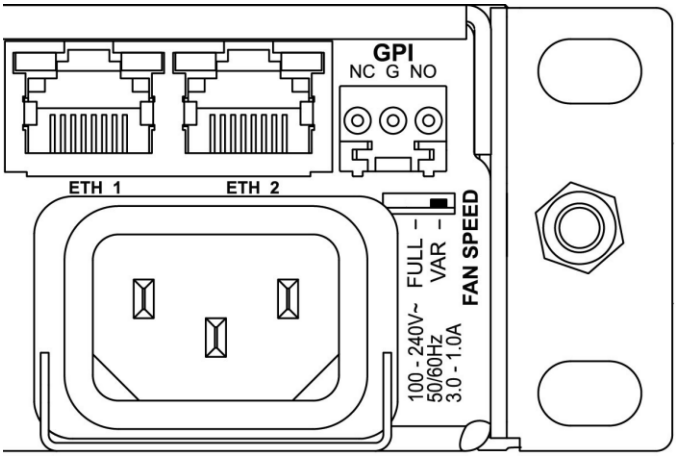

Use a small tool (e.g., a pen tip or a small screwdriver) to change the switch setting.

Signalling

Output Cards

The KMX-3901-OUT cards are output modules that can be installed in a Densité 3, Densité 3+ FR1, or Densité 3 mini frame, to be part of a Kaleido-Modular-X multiviewer system. Within a Kaleido-Modular-X system an output card can be designated as either *Output A,* or *Output B.* They are dual-head output cards, meaning that they support two independent outputs called *Head 1* and *Head 2*. Each output card is complemented by a rear panel (KMX-3901-OUT-D-3DRP, or KMX-3901-OUT-D-3+SRP) that holds all input and output connectors associated with the card.

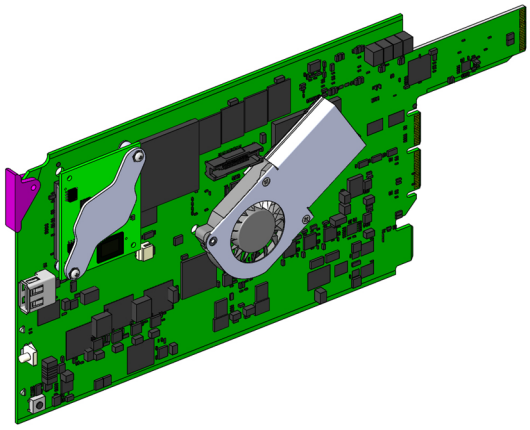

Note: Output cards with a single rear connector panel (KMX-3901-OUT-D-3+SRP) are compatible with Densité 3+ FR1 only.

In Kaleido-Modular-X systems with two cards, one card is considered the *master* card, and the others is the *slave* card. If the master card is removed, the other output card will take on the master role automatically.

An output card is connected to the other cards in the Kaleido-Modular-X system to which it belongs through the housing frame's internal midplane (for cards housed in the same frame), in addition to Ethernet, and FlexBridge connections.

External connections to an output card are made through connectors that are found in two locations:

- on the rear panel (see KMX-3901-OUT-D-3DRP rear panel connections, below, and KMX-3901-OUT-D-3+SRP rear panel connections, on page 12)
- on the front card edge (see KMX-3901-OUT front card-edge USB connector, on page 13)

KMX-3901-OUT-D-3DRP rear panel connections

The KMX-3901-OUT-D-3DRP rear-panel covers 2 slots, and its layout includes 2 HDMI outputs, 2 HD-SDI monitoring outputs, 2 analog audio outputs, 1 Ethernet connector, 1 RS-422 connector, 2 FlexBridge inputs, and 2 SFP cages. In the case of the HDMI outputs, HD-SDI monitoring outputs, and analog audio outputs, in each pair, the output associated with the second head is **NOT** enabled if your output card is the single-head model (KMX-3901-OUT-S). A software option is available to enable the second head.

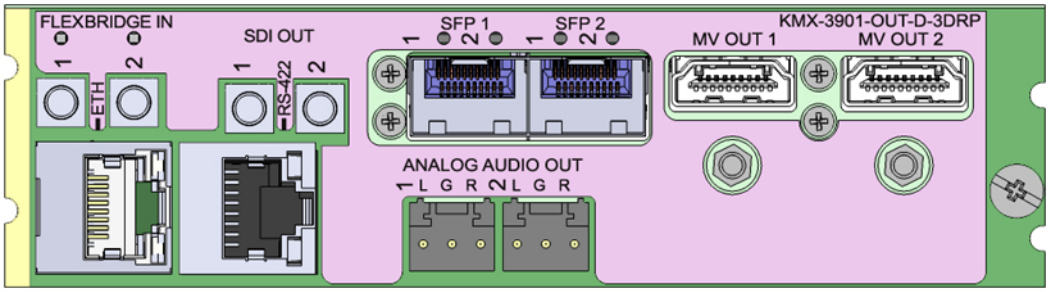

KMX-3901-OUT-D-3DRP rear panel

The following table lists the function of each connector associated with the output heads.

Connector label		Connector type	Function
Head 1	Head 2		
FLEXBRIDGE IN 1	FLEXBRIDGE IN 2	DIN 1.0/2.3	Connection carrying a 3G SDI signal, which contains the mosaic from the input cards (without graphical elements, i.e., no audio meters, no UMDs, etc.).
MV OUT 1	MV OUT 2	HDMI	High definition connection for the multiviewer output, which carries audio and video, and can support resolutions up to 1920 × 1200.
SDI OUT 1	SDI OUT 2	DIN 1.0/2.3	Serial digital HD output signal for monitoring purposes
ANALOG OUT 1 L	ANALOG OUT 2 L	WECO	Analog audio output (left channel) to feed the audio monitoring system
ANALOG OUT 1 R	ANALOG OUT 2 R	WECO	Analog audio output (right channel) to feed the audio monitoring system
SFP 1	SFP 2	—	Optional inputs. *Not yet supported.*

The following table lists the purpose of each connector associated with card control.

Connector label	Connector type	Function
ETH	RJ-45	100 Base-T Ethernet connection
RS-422	RJ-45[a]	Connect to an RS-422 (SMPTE ST 207, EBU-3245) or RS-485 device or network

a. The KMX-3901-OUT's RS-422 ports have an RJ-45 connector in order to preserve space on a busy panel. The RS-422 interface specifies a DE-9 connector, so if you are using this interface, you will require a DE-9-to-RJ-45 adapter. Grass Valley supplies two adapter models, correctly wired for this application: a straight adapter (part no. 1737-3000-102), and a crossover adapter (part no. 1792-3700-100).

RS-422 connection diagram

The pinout for the RS-422 signals on the RJ-45 connectors, and the wiring diagrams for the appropriate adapters, are shown here:

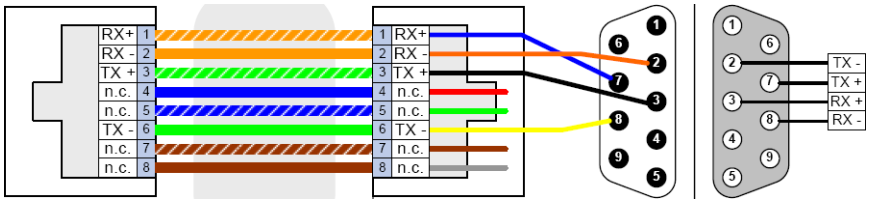

Pinout of each RS-422 port's RJ-45 connector on the multiviewer

RJ-45
Pinout of **straight** adapter (Grass Valley part no. 1737-3000-102)

DE-9 male
DE-9 female
Pinout of RS-422 connector on SMPTE **slave** device

Standard wiring between multiviewer and devices wired to SMPTE "slave" specification (e.g. most routers, Ross Synergy switchers, Nevion ETH-CON)

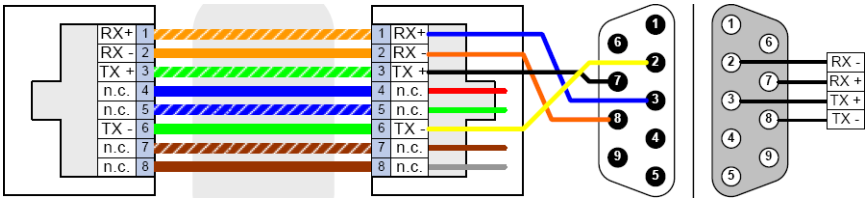

Pinout of each RS-422 port's RJ-45 connector on the multiviewer

RJ-45
Pinout of **crossover** adapter (Grass Valley part no. 1792-3700-100)

DE-9 male
DE-9 female
Pinout of RS-422 connector on SMPTE **master** device

Standard wiring between multiviewer and devices wired to SMPTE "master" specification (e.g. Philips Jupiter router control system, Miranda Presmaster PCS)

> Note: The two RS-422 ports on the multiviewer side have no ground pin. Using the appropriate DE-9S-to-RJ-45 adapter, an external device should be able to communicate with a multiviewer despite the lack of a ground.

For more information about the serial ports' specifications, see Serial port, on page 54. For more information about the RS-422 serial connections, see the "Serial Connections" section in the *Routers* chapter of the Kaleido-X User's Manual.

KMX-3901-OUT-D-3+SRP rear panel connections

The KMX-3901-OUT-D-3+SRP rear panel covers 1 slot, and its layout includes 2 HDMI outputs, 2 HD-SDI monitoring outputs, 1 Ethernet connector, 2 FlexBridge inputs, and 1 SFP cages. In the case of the HDMI outputs, and HD-SDI monitoring outputs, in each pair, the output associated with the second head is **NOT** enabled if your output card is the single-head model (KMX-3901-OUT-S). A software option is available to enable the second head.

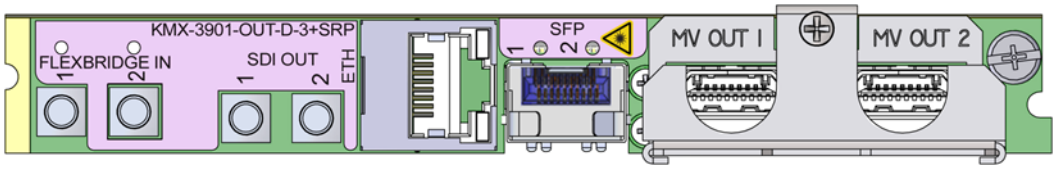

KMX-3901-OUT-D-3+SRP rear panel

Notes

- The single rear connector panel KMX-3901-OUT-D-3+SRP does not have a serial port. To support a serial device, your Kaleido-Modular-X system must have at least one output card with a double rear connector panel (KMX-3901-OUT-D-3DRP).
- The single rear connector panel does not support analog audio outputs. Audio monitoring is available at the SDI and HDMI outputs only.

The following table lists the function of each connector associated with the output heads.

Connector label		Connector type	Function
Head 1	Head 2		
FLEXBRIDGE IN 1	FLEXBRIDGE IN 2	DIN 1.0/2.3	Connection carrying a 3G SDI signal, which contains the mosaic from the input cards (without graphical elements, i.e., no audio meters, no UMDs, etc.).
MV OUT 1	MV OUT 2	HDMI	High definition connection for the multiviewer output, which carries audio and video, and can support resolutions up to 1920 × 1200.
SDI OUT 1	SDI OUT 2	DIN 1.0/2.3	Serial digital HD output signal for monitoring purposes
SFP 1	SFP 2	—	Optional inputs. *Not yet supported.*

The following table lists the purpose of the connector associated with card control.

Connector label	Connector type	Function
ETH	RJ-45	100 Base-T Ethernet connection

KMX-3901-OUT front card-edge USB connector

The KMX-3901-OUT output cards have one USB connector, into which you may connect a mouse, keyboard, or USB flash memory for a software upgrade or data backup. The diagram below shows the USB connector, between various LED indicators and the Select button, on the output cards' front edge. See KMX-3901-OUT Output Card Interface on page 35, for a detailed description of the LED indicators, and Using the Densité Frame Control Panel, on page 37, for more information on the Select button.

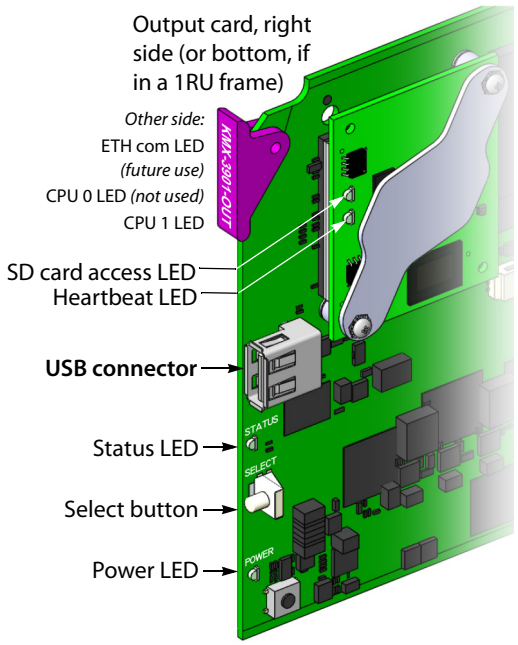

Input Cards

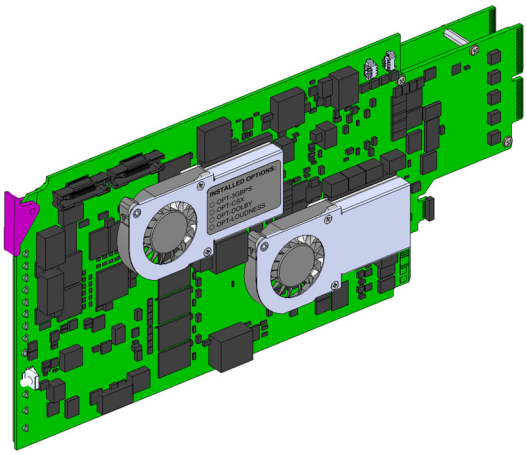

The KMX-3901-IN cards are input modules that can be installed in a Densité 3 frame, to be part of a Kaleido-Modular-X multiviewer system. Input cards are available with eight or 16 inputs. Two different 16-input card models are available to drive one or two output cards for two or four possible multiviewer outputs. Within a Kaleido-Modular-X system input cards are designated as *Input A, Input B, Input C,* and *Input D,* where Input A is the card closest to the output stage. Every KMX-3901-IN card is complemented by a rear panel connector that holds all input and output connectors associated with the card.

An input card is connected to the other cards in the Kaleido-Modular-X system to which it belongs through the housing frame's internal midplane (for cards housed in the same frame), and through FlexBridge connections.

Rear panels with 8, or 16 input connectors

The KMX-3901-IN rear panels include 8 or 16 input connectors, 1 ABT/MADI audio input, 1 LTC input, 1 reference input, 2 or 4 FlexBridge inputs, 2 or 4 FlexBridge outputs, and 1 or 2 SFP cages.

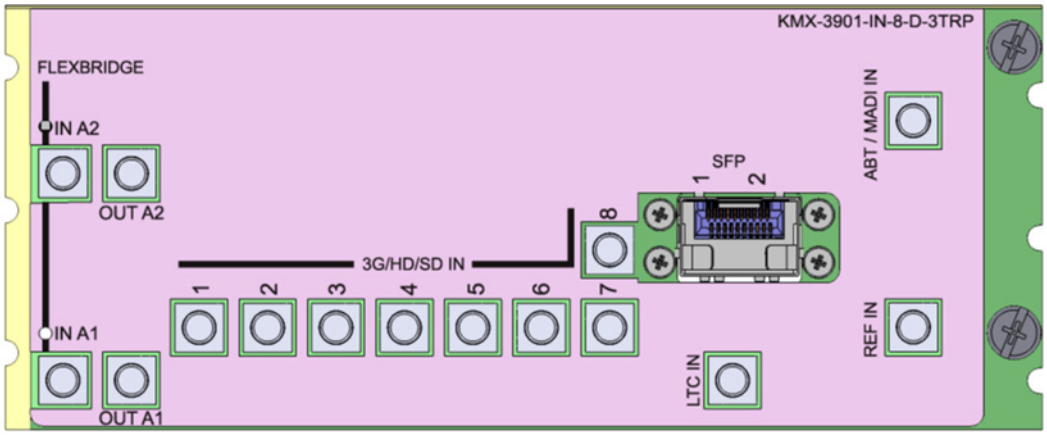

KMX-3901-IN-8-D-3TRP rear panel

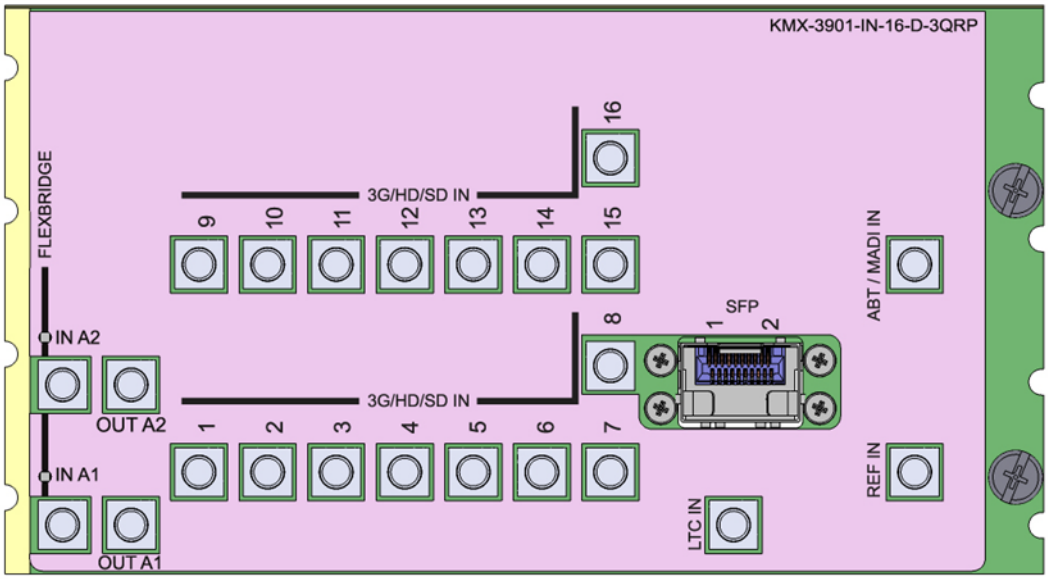

KMX-3901-IN-16-D-3QRP rear panel

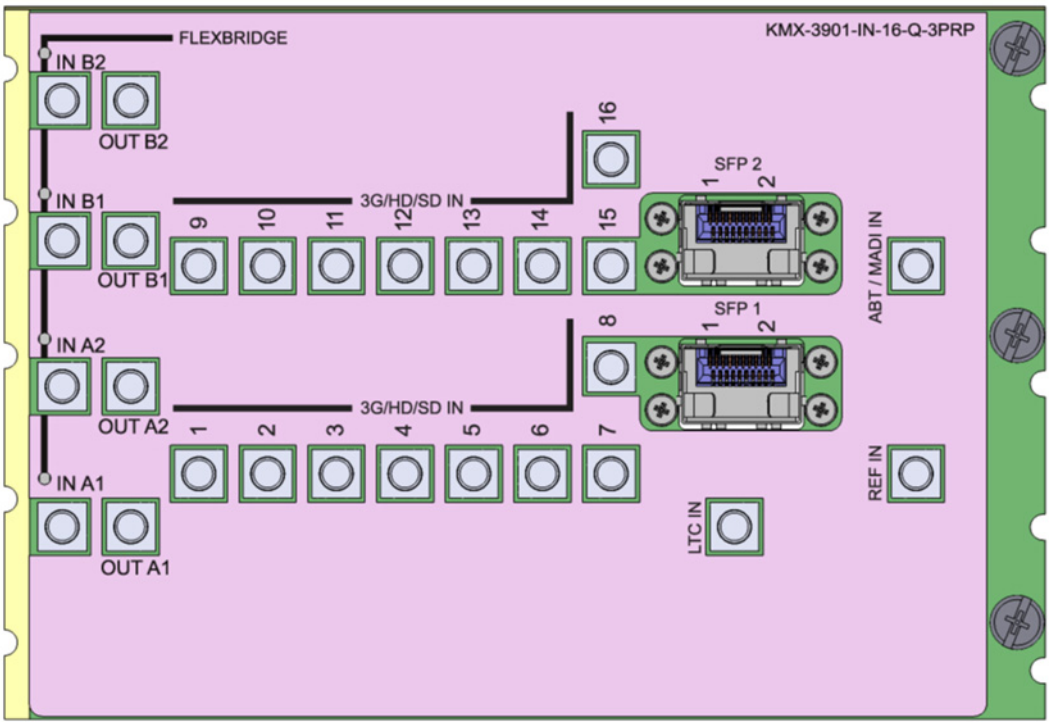

KMX-3901-IN-16-Q-3PRP rear panel

Connector label	Connector type	Function
3G/HD/SD IN 1 to 3G/HD/SD IN 16	DIN 1.0/2.3	SD-SDI, HD-SDI, or 3G-SDI video inputs 1 to 16
ABT/MADI IN	DIN 1.0/2.3	Multiplexed audio from an external device (Audio Bridge Terminal)
LTC IN	DIN 1.0/2.3	Time code input
REF IN	DIN 1.0/2.3	Reference signal to genlock the multiviewer to the local plant.
FLEXBRIDGE IN A1, FLEXBRIDGE IN A2	DIN 1.0/2.3	Connections carrying the 3G SDI signals, which contains the mosaic (without graphical elements, i.e., no audio meters, no UMDs, etc.) from an upstream input card, for two heads of the system.
FLEXBRIDGE OUT A1, FLEXBRIDGE OUT A2	DIN 1.0/2.3	Connections carrying the 3G SDI signals, which contains the mosaic (without graphical elements, i.e., no audio meters, no UMDs, etc.) resulting from any upstream input cards and the current input card, for two heads of the system.
FLEXBRIDGE IN B1, FLEXBRIDGE IN B2	DIN 1.0/2.3	Connections carrying the 3G SDI signals, which contains the mosaic (without graphical elements, i.e., no audio meters, no UMDs, etc.) from an upstream input card, for two heads of the system.

Connector label	Connector type	Function
FLEXBRIDGE OUT B1, FLEXBRIDGE OUT B2	DIN 1.0/2.3	Connections carrying the 3G SDI signals, which contains the mosaic (without graphical elements, i.e., no audio meters, no UMDs, etc.) resulting from any upstream input cards and the current input card, for two heads of the system.
SFP 1, SFP 2	—	Optional ports. *Not yet supported.*

Rear panels with M3 connector

The KMX-3901-IN-M3 rear panels include 1 M3 input connector, 1 ABT/MADI audio input, 1 LTC input, 1 reference input, 2 or 4 FlexBridge inputs, 2 or 4 FlexBridge outputs, and 1 or 2 SFP cages.

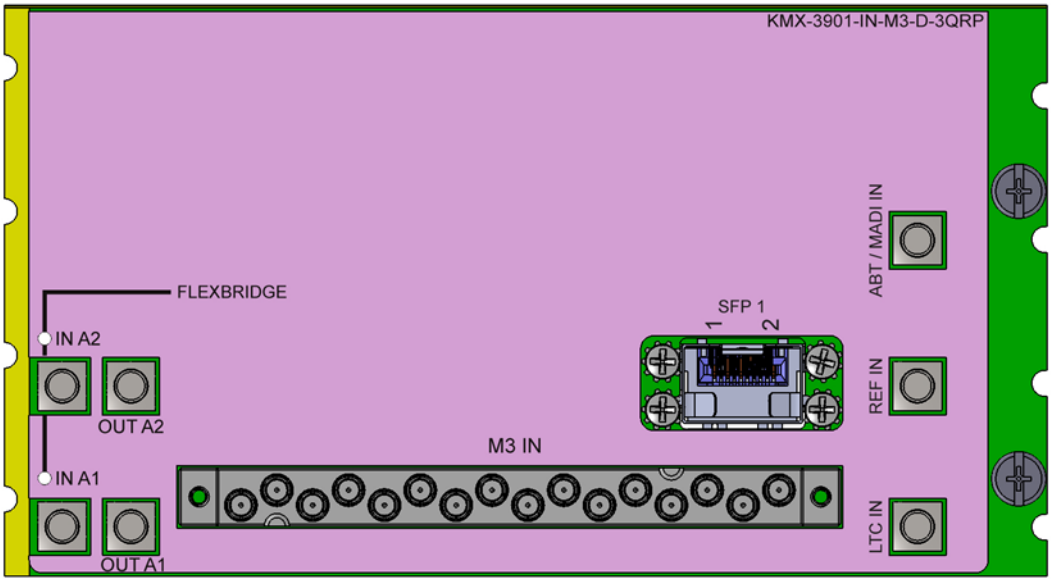

KMX-3901-IN-M3-D-3QRP rear panel

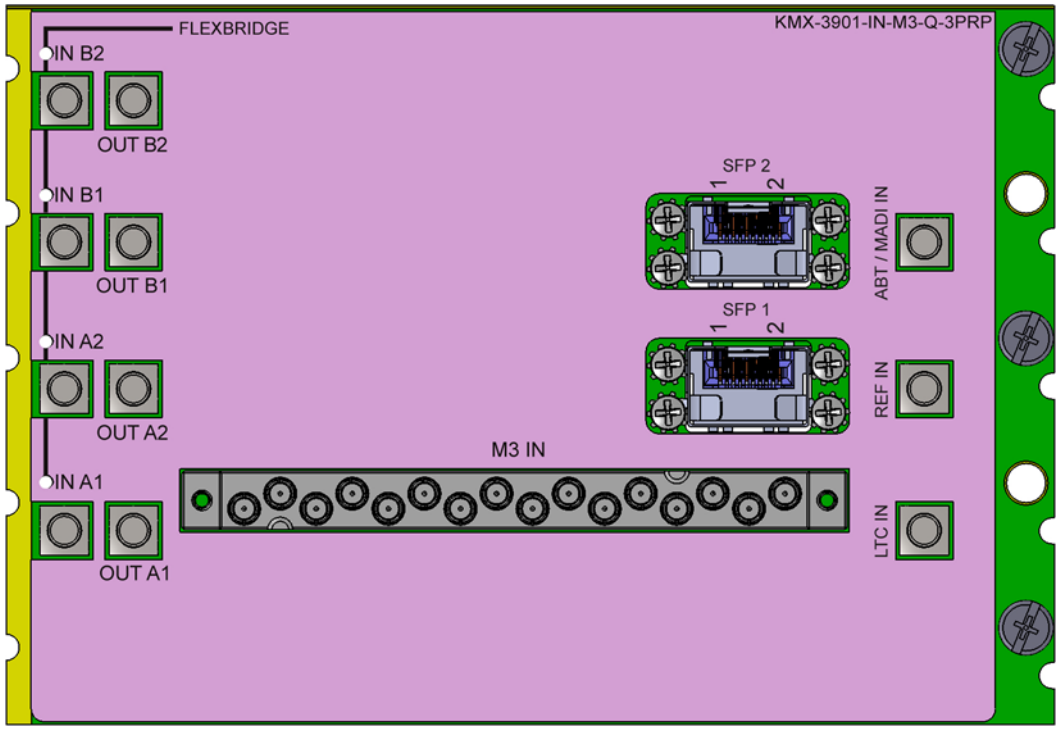

KMX-3901-IN-M3-Q-3PRP rear panel

Connector label	Connector type	Function
M3 IN	M3	SD-SDI, HD-SDI, or 3G-SDI video inputs 1 to 16 from NVISION router output module. Refer to the *NV8500 Series User's Guide* (part no. UG0034) to determine router output mapping.
ABT/MADI IN	DIN 1.0/2.3	Multiplexed audio from an external device (Audio Bridge Terminal).
LTC IN	DIN 1.0/2.3	Time code input.
REF IN	DIN 1.0/2.3	Reference signal to genlock the multiviewer to the local plant.
FLEXBRIDGE IN A1, FLEXBRIDGE IN A2	DIN 1.0/2.3	Connections carrying the 3G SDI signals, which contains the mosaic (without graphical elements, i.e., no audio meters, no UMDs, etc.) from an upstream input card, for two heads of the system.
FLEXBRIDGE OUT A1, FLEXBRIDGE OUT A2	DIN 1.0/2.3	Connections carrying the 3G SDI signals, which contains the mosaic (without graphical elements, i.e., no audio meters, no UMDs, etc.) resulting from any upstream input cards and the current input card, for two heads of the system.
FLEXBRIDGE IN B1, FLEXBRIDGE IN B2	DIN 1.0/2.3	Connections carrying the 3G SDI signals, which contains the mosaic (without graphical elements, i.e., no audio meters, no UMDs, etc.) from an upstream input card, for two heads of the system.

Connector label	Connector type	Function
FLEXBRIDGE OUT B1, FLEXBRIDGE OUT B2	DIN 1.0/2.3	Connections carrying the 3G SDI signals, which contains the mosaic (without graphical elements, i.e., no audio meters, no UMDs, etc.) resulting from any upstream input cards and the current input card, for two heads of the system.
SFP 1, SFP 2	—	Optional ports. *Not yet supported.*

4K UHD Prescaler

On the KMX-3901-IN-16Q configured as a 4K UHD prescaler, the input connectors 3G/HD/SD IN 3, 4, 7, 8, 11, 12, 15, and 16 are not used. The connectors listed in the table below support quad link 3G-SDI signal sources.

Connector	Description
3G/HD/SD IN 1	Link 1A – Top left quadrant of 4K UHD signal A
3G/HD/SD IN 2	Link 2A – Top right quadrant of 4K UHD signal A
3G/HD/SD IN 9	Link 3A – Bottom left quadrant of 4K UHD signal A
3G/HD/SD IN 10	Link 4A – Bottom right quadrant of 4K UHD signal A
FLEXBRIDGE OUT A1	1080p prescaled output of signal A
3G/HD/SD IN 5	Link 1B – Top left quadrant of 4K UHD signal B
3G/HD/SD IN 6	Link 2B – Top right quadrant of 4K UHD signal B
3G/HD/SD IN 13	Link 3B – Bottom left quadrant of 4K UHD signal B
3G/HD/SD IN 14	Link 4B – Bottom right quadrant of 4K UHD signal B
FLEXBRIDGE OUT B1	1080p prescaled output of signal B

Make sure that the 4K UHD prescaler card and its 4K UHD source signals are all referenced together. The refresh rate of the prescaler card outputs follow the refresh rate of the input reference signal. The eight audio channels embedded into the output signal come from video input 1 for head 1 and from video input 5 for head 2.

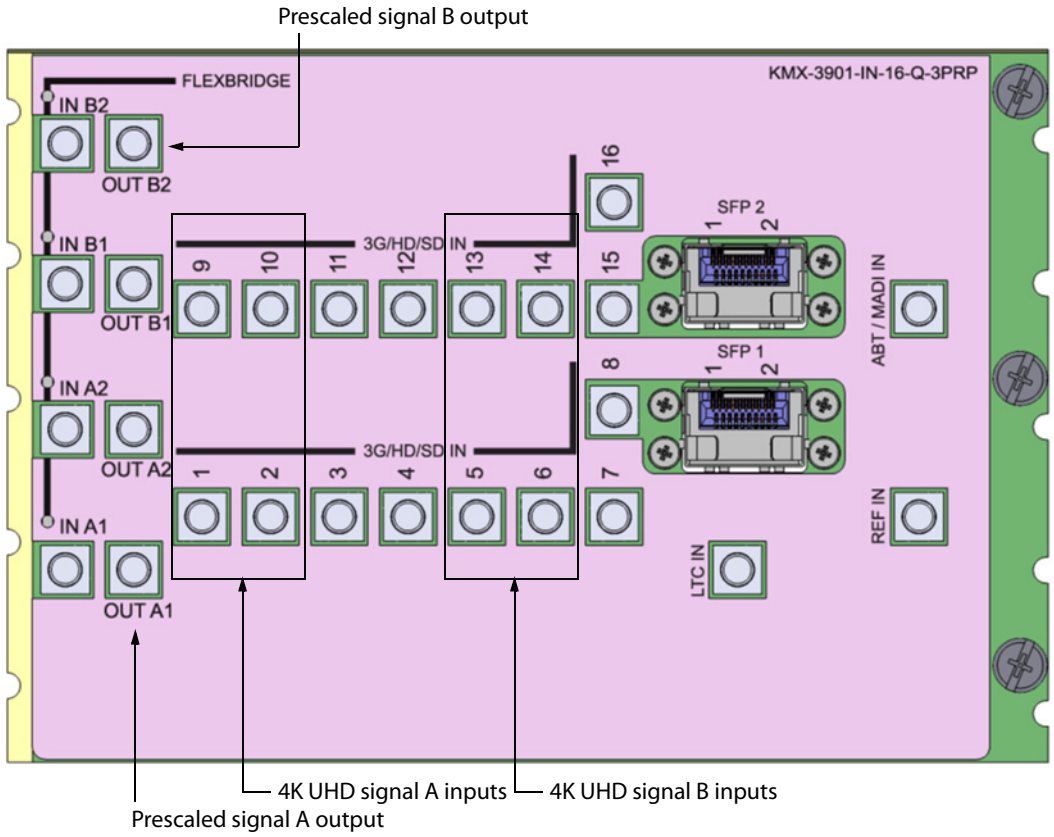

GPI-1501 General Purpose Interface I/O Module

A GPI-1501 card supports 20 GPI inputs, and 8 configurable GPI input/output terminals. The associated rear panel holds a DB-44 connector, through which all signal inputs and outputs are routed.

The pinout of this connector is as follows:

Pin	Signal
1	GPIO-1 +
2	GPIO-3 –
3	GPIO-4 +
4	GPIO-6 –
5	GPIO-7 –
6	GPIO-8 +
7	RS422-TX –
8	GPI-I 18
9	GPI-I 15
10	GPI-I 12
11	GPI-I 10

Pin	Signal
12	GPI-I 7
13	GPI-I 4
14	GPI-I 1
15	GND
16	GPIO-1 –
17	GPIO-2 +
18	GPIO-4 –
19	GPIO-5 +
20	GPIO-6 +
21	GPIO-8 –
22	RS422-RX +

Pin	Signal
23	RS422-TX +
24	GPI-I 19
25	GPI-I 17
26	GPI-I 13
27	GPI-I 11
28	GPI-I 8
29	GPI-I 5
30	GPI-I 2
31	GND
32	GPIO-2 –
33	GPIO-3 +

Pin	Signal
34	GPIO-5 –
35	GND
36	GPIO-7 +
37	RS422-RX –
38	GPI-I 20 / LTC
39	GPI-I 16
40	GPI-I 14
41	GND
42	GPI-I 9
43	GPI-I 6
44	GPI-I 3

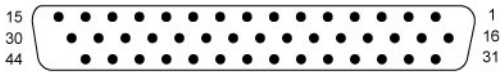

DB-44 connector

For ease of connection, you may use the GPI-1501-TBA terminal block adapter with integral 44-pin connector. Refer to the GPI-1501 Guide to Installation and Operation (available on the Kaleido-X DVD that shipped with your system, and from the Grass Valley support portal), for more information. Refer to the Kaleido-X User's Manual for detailed instructions on configuring a GPI-1501 within your multiviewer system.

Maintenance

Handling the Front Door

The front door of a Densité housing frame is fastened in place by two captive thumbscrews, one at each end of the door. The door is attached to the frame by guides that slide out of the frame as the door is pulled, and allow the door to be lowered below the frame so that cards and power supplies can be removed and installed.

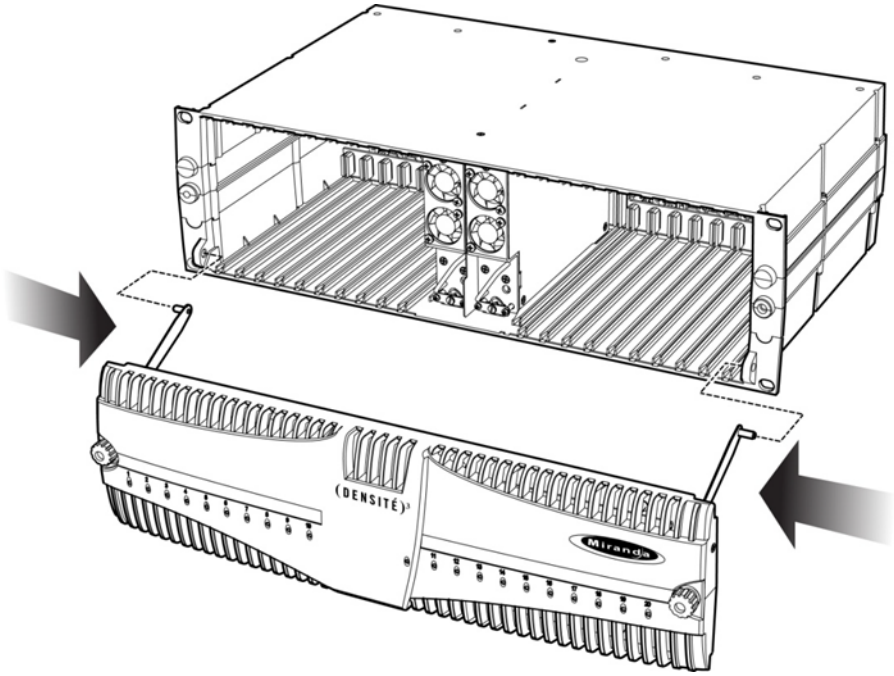

Densité 3 frame with open door

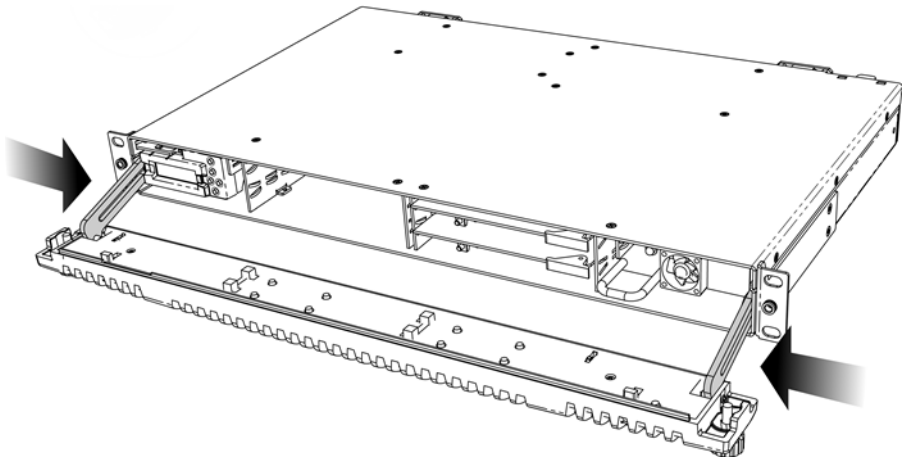

Densité 3+ FR1 frame with open door

Opening the front door

To open the door

- Turn both thumbscrews counterclockwise until they release, and then pull the door away from the front of the frame.

Removing the front door

To remove the door

- Slip the ends of the guides off the posts on the door assembly.

> Note: You must tilt the door on an angle so the guides can move freely. There are no electrical connections to the door.

Closing the front door

To close the door

- Slide it into position against the front of the frame, and then turn the captive thumbscrews clockwise until the door is securely fastened into place.

Replacing Cards

All cards and rear panels can be installed with the frame power on. Each card has a connector which plugs into the frame's backplane for distribution of power and connection to the controller card, and one or two connectors (depending on the card type) that plug into the associated rear panel for inputs and outputs.

> IMPORTANT
> The rear panel must be installed before the card is inserted into the frame.

Replacing rear connector panels

To replace a rear connector panel in a Densité 3+ FR1 frame

1 If cards are already installed in the housing frame whose rear panel is being changed, remove them (see Removing a card, on page 23).
2 Remove the existing panel by releasing the captive screws.
3 Position the new panel and secure it in place with the captive screws.

To replace a rear connector panel in a Densité 3 frame

1 If a card is already installed in the slot whose rear panel is being changed, remove it (see Removing a card, on page 23).
2 Remove the existing panel (either blank or belonging to an existing card that is being changed) by releasing the captive screws at the bottom.

   There may be several captive screws, depending on the card type.
3 Position the new panel and secure it in place with the captive screws at the bottom.

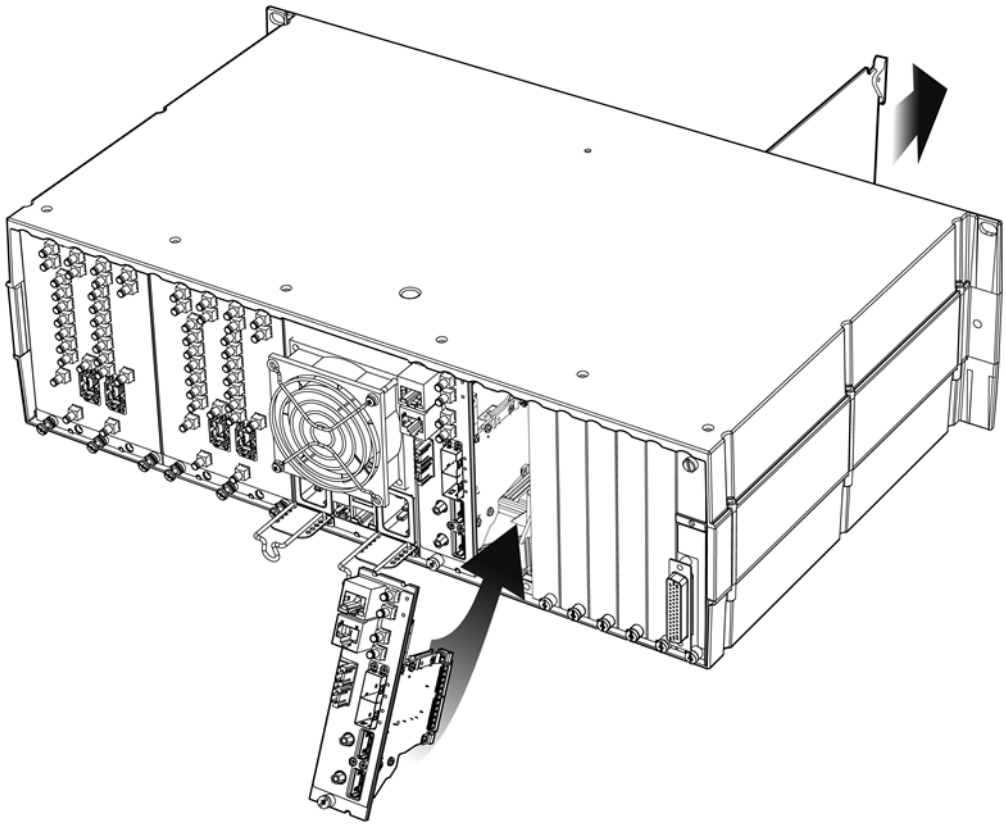

Removing a card

> Note: Removing more than one input card from a Kaleido-Modular-X system in operation is not supported.

To remove a card

1 Open the front door of the frame (see Opening the front door, on page 22).

2 Tilt the swivel handle, on the front of the card you wish to remove, to lever the connectors apart, and then use the handle to pull the card straight out of the slot.

3 Close the front door of the frame (see Closing the front door, on page 22).

Installing a card

> Note: The rear panel must be installed before the card. See Replacing rear connector panels on page 23.

To install a card in a Densité 3+ FR1 frame

1 Open the front door of the frame (see Opening the front door, on page 22).

2 To install a card into an empty slot, slide the card into the slot with the swivel handle to the right, and push gently on the handle to seat the connectors. If the card requires a double-width rear panel to accommodate a large number of connectors, it should be inserted into the lower slot. Inserting the card into the wrong slot will not damage the card, and will be flagged by the on-card status LED flashing to indicate that there is no connection to the rear panel.

3 Close the front door of the frame (see To close the door, on page 22).

To install a card in a Densité 3 frame

1 Open the front door of the frame (see Opening the front door, on page 22).

2 To install a card into an empty slot, slide the card into the slot, and push gently on the handle to seat the connectors.

Seating input cards requires more pressure. Their rear panels cover 3, 4 or 5 slots, depending on the model, to accommodate a large number of connectors.

- A KMX-3901-IN-8-D input card occupies 3 slots and should be inserted in the center slot (e.g. if the rear panel covers slots 4–6, insert the card itself at slot 5).
- A KMX-3901-IN-16-D input card occupies 4 slots and should be inserted *one* slot to the left of the rightmost slot (e.g. if the rear panel covers slots 7–10, insert the card itself at slot 9).
- A KMX-3901-IN-16-Q input card occupies 5 slots and should be inserted *two* slots to the left of the rightmost slot (e.g. if the rear panel covers slots 11–15, insert the card itself at slot 13).
- In a Densité3 frame, output cards must be installed with a double-width rear panel, and they should be inserted into the left-hand slot (i.e., if the rear panel covers slots 2 and 3, you must insert the card itself at slot 2).

Inserting the card into the wrong slot will not damage the card, and will be flagged by the on-card status LED flashing to indicate that there is no connection to the rear panel.

3 Close the front door of the frame (see To close the door, on page 22).

4K UHD Prescaler Configuration and Upgrade

Converting a KMX-3901-IN-16-Q Input Card to a 4K UHD Prescaler

To configure a KMX-3901-IN-16-Q input card as a 4K UHD prescaler

1 Press the Select button on the front edge of the *KMX-3901-IN-16-Q input card* you wish to configure.

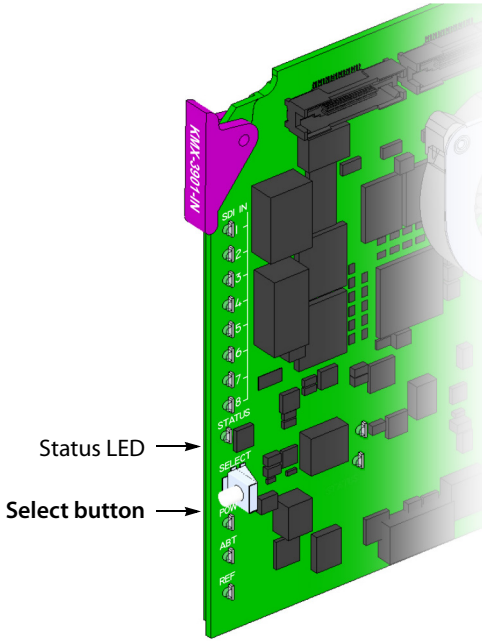

The Status LED on the selected card flashes orange, and the associated control menu appears on the LCD display of the Densité frame's local control panel.

2 On the local control panel, press the [–] button.

CONFIG appears on the LCD display.

3 Press the SEL button.

4K UHD PRESCALER appears on the LCD display.

4 Press the SEL button.

5 Press the [+] or [–] buttons, if needed, until ENABLE appears on the LCD display.

6 Press the SEL button.

ENABLE appears on the top line of the LCD display, and then, after a few seconds, a message appears on the second line to let you know that the card will restart in 20 seconds.

7 After the card has restarted, notice that the SDI LEDs 3, 4, 7, 8, 11, 12, 15, and 16 are not lit.

This indicates that the card is now configured as a 4K UHD prescaler.

Converting a 4K UHD Prescaler to a KMX-3901-IN-16-Q Input Card

To configure a 4K UHD prescaler as a KMX-3901-IN-16-Q input card

1 Press the Select button on the front edge of the prescaler card you wish to configure.

The Status LED on the selected card flashes orange, and the associated control menu appears on the LCD display of the Densité frame's local control panel.

2 On the local control panel, press the [–] button.

CONFIG appears on the LCD display.

3 Press the SEL button.

4K UHD PRESCALER appears on the LCD display.

4 Press the SEL button.

5 Press the [+] or [–] buttons, if needed, until DISABLE appears on the LCD display.

6 Press the SEL button.

DISABLE appears on the top line of the LCD display, and then, after a few seconds, a message appears on the second line to let you know that the card will restart in 20 seconds.

7 After the card has restarted, notice that all SDI LEDs are lit.

This indicates that the card has reverted to its original mode.

Upgrading 4K UHD Prescaler Cards

If your Kaleido-Modular-X system includes 4K UHD prescaler cards, these must be upgraded individually, *after* you have upgraded your system by the usual method.

To upgrade your system's 4K UHD prescaler cards

1 Upgrade your Kaleido-Modular-X system by the usual method (refer to the Kaleido-X Release Notes for detailed instructions).

2 After all input and output cards have restarted, momentarily remove one of your system's KMX-3901-IN-16-Q input cards, and set it aside.

3 Repeat the following for every prescaler card in your system:

a Momentarily revert the prescaler card to an input card (see Converting a 4K UHD Prescaler to a KMX-3901-IN-16-Q Input Card, on page 25).

b After the card you wish to upgrade has restarted, remove it from its slot, and then insert it in the slot you emptied at step 2 above.
The system detects that the newly inserted card has a different software version, and upgrades it automatically. This takes a few minutes, after which the card restarts.

c Once the card has restarted, remove it from the slot, and insert it back into its original position.

d Convert the card back to a 4K UHD prescaler (see Converting a KMX-3901-IN-16-Q Input Card to a 4K UHD Prescaler, on page 25).

4 Insert the input card you had set aside at step 2 back into its original position.

Replacing the CPU-ETH2 Controller Card

To replace the CPU-ETH2 controller card

1 Open the front door of the frame (see Opening the front door, on page 22).

In a **Densité 3** frame, the controller card is located to the right of the power supply slots at the center of the frame.

- Hook your finger through the opening at the top of the card.

In a **Densité 3+ FR1** frame, the controller card is located on the upper left-hand side of the frame, above the left-hand power supply.

- Grasp the metal handle on the upper left-hand side of the card; the handle will slide out so that it can be gripped properly.

2 Pull gently until the card is released from the rear connector, and then slide the card out of the frame.

Note: Do not pull on the control panel to remove the card.

3 Slide the new card into the controller slot, and push gently on the card edge to engage the rear connectors.

4 Be sure to close the front door before operating the Kaleido-Modular-X, to ensure proper ventilation (see Closing the front door, on page 22).

Replacing a GPI-1501 Card

In a **Densité 3+ FR1** frame, the GPI-1501 card is located in a special slot, on the upper right-hand side of the frame, above the (optional) right-hand power supply.

To replace a GPI-1501 card

1 Open the front door of the frame (see Opening the front door, on page 22).

2 Tilt the swivel handle, on the front of the card, to lever the connectors apart, and then use the handle to pull the card straight out of the slot.

3 Slide the new GPI-1501 card into the slot — with the swivel handle to the right, in the case of a Kaleido-Modular-X (1RU) model —, and push gently on the handle to seat the connectors.

4 Close the front door of the frame (see Closing the front door, on page 22).

Replacing Power Supply Modules

The Densité frames support dual redundant hot-swappable power supplies. The basic configuration includes a single supply, with an empty slot for the optional redundant power supply. Installing a second power supply module and applying power to it automatically engages the redundant supply mode. Each power supply has its own power socket on the rear panel, and should be connected to the AC supply using the power cord that shipped with your hardware, or other approved cord.

Notes

- A single power supply can be installed in either of the two slots. In the case of a Kaleido-Modular-X (1RU), you may prefer to install the power supply module in the right-hand slot to avoid having to remove the controller card should you need to replace the power supply.
- Power integrity is enhanced if the two power supplies are plugged into different circuits.

To install or change a power supply module in a Densité 3 frame

1. Open the front door of the frame (see Opening the front door, on page 22).
2. Remove the controller card, to provide access to the power supply slots (see Replacing the CPU-ETH2 Controller Card, on page 26).
3. Release the retaining spring by turning the captive screw mounted on the lower front panel of the power supply counterclockwise.
4. Remove the power supply module by pulling on the handle on its front panel and sliding it out of the frame.
5. Slide the new power supply module into the slot, and push it gently into position to seat the connectors.
6. Secure the supply in position by turning the captive screw mounted on the lower front of the power supply clockwise.

   This engages a retaining spring which holds the supply securely in place.
7. Replace the controller card.
8. Close the front door of the frame (see Closing the front door, on page 22).

To install or change a power supply module in a Densité 3+ FR1 frame

1. Open the front door of the frame (see Opening the front door, on page 22).
2. If you are removing the left-hand side power supply, you must first remove the controller card. See Replacing the CPU-ETH2 Controller Card below.
3. Remove the power supply module by pulling on the handle on its front panel and sliding it out of the frame.
4. Slide the new power supply module into the slot, and push it gently into position to seat the connectors.

   There is no guiding slot — the supply base sits on the floor of the frame.
5. If you removed the controller card in step 2, reinstall it (see Replacing the CPU-ETH2 Controller Card).
6. Close the front door of the frame (see Closing the front door, on page 22).

   The door secures the power supplies in place.

Replacing Frame Ventilation Fans

The main cooling fans on the rear of Densité frames may be replaced in case of failure. Replacement fans are Grass Valley part number 1844-3000-200 for a Densité 3 frame, or #0969-2100 for a Densité 3+ FR1 frame.

Replacing the frame ventilation fan in a Densité 3 frame

To replace the frame ventilation fan in a Densité 3 frame

1. Remove the two screws that secure the grill and fan unit to the frame.

   Retain the screws and grill, as they will be used with the replacement fan.
2. Pull the unit away from the frame, and disconnect the power feed by grasping the connector and pulling straight out.

Grass Valley uses two different fan units for this product. While they are electrically equivalent, they have slightly different dimensions. The fan is installed with two screws located on opposite corners. The mounting plate has two sets of corner holes — one to fit each of the available fan models.

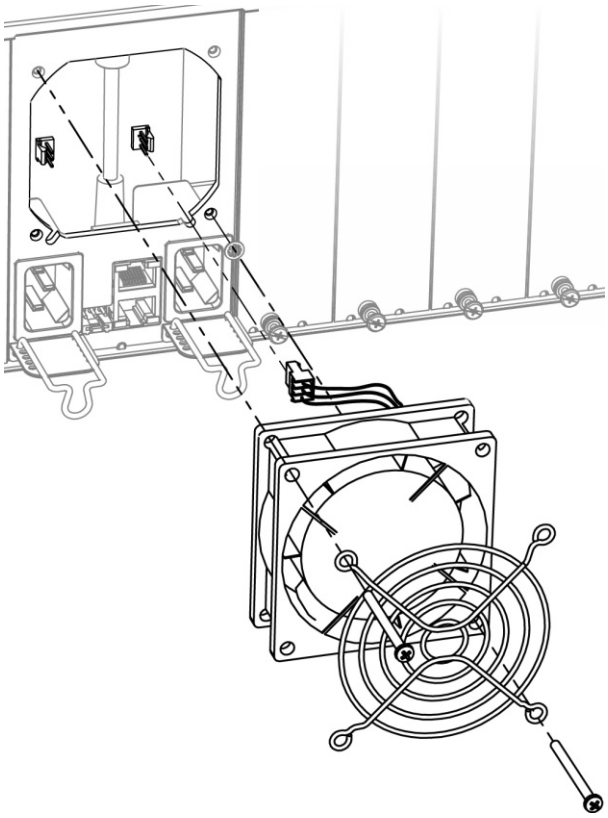

3 Start installing your new fan unit with one corner screw, and then try the diagonally opposite corner to see if it fits. If not, use the other pair of corners.

   These two fan units also have different power connection configurations. There are two identical power connectors available on the frame for the fan's power cable. When you install the fan, you will be able to tell which one you should use: only one will be within reach.

4 Grasp the power connector attached to the fan assembly, and push it onto the appropriately-located power outlet inside the cutout on the rear panel.

5 Use the two screws you retained from the old fan, to install the new fan and grill.

Replacing the frame ventilation fan in a Densité 3+ FR1 frame

To replace the frame ventilation fan in a Densité 3+ FR1 frame

1 Remove the two screws that secure the fan assembly to the frame, and pull the fan assembly straight out of the frame.

   Retain the screws, as they will be used with the replacement fan.

2 Slide the new fan assembly into the opening on the rear panel, pushing it straight in, and ensuring that the connector on the assembly mates with the socket in the frame.

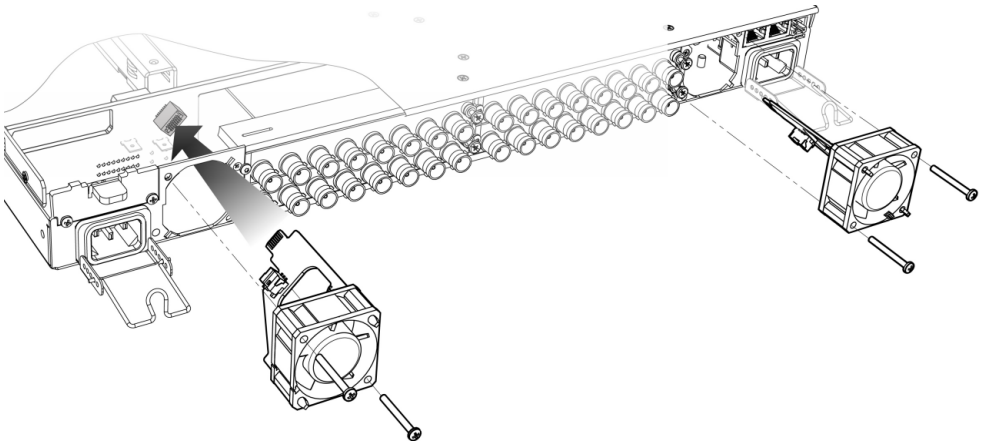

The two ventilator fans are mounted at different angles, as shown in the above figure.

3 Align the circuit board on the fan assembly with the notches in the edge of the rear-panel opening (see arrows in figure at right) to ensure the correct alignment.

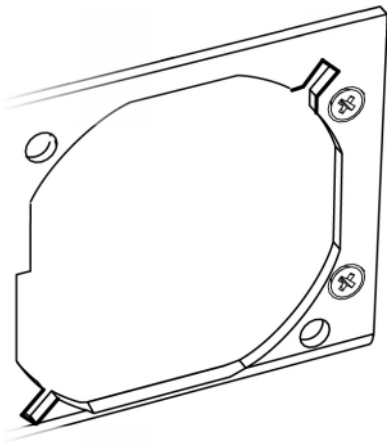

The socket into which the circuit board connects is hidden from view by the fan assembly during installation and there is no guide to ensure that they are aligned. The easiest way to make sure that the connector and socket have mated properly is to install the fan with the frame power turned on. You will hear the fan start up when the connection is made.

4 Use the two screws you retained from the old fan, to secure the new fan assembly to the rear panel.

Replacing the Air Filter

You may remove the air filter for cleaning or replacement.

To remove the air filter

1 Open the front panel of the frame (see Opening the front door, on page 22).

2 Grasp the top of the filter installed on the rear of the door, and pull it gently out of its mounting slot.

To install a filter

1 Slide the filter into the slot at the bottom of the front panel door, and ensure that the filter is not bunched or folded.

2 Close the front panel of the frame (see Closing the front door, on page 22).

2 Operation

The Kaleido-Modular-X can be controlled in different ways:

- In the housing frame, you can monitor card operating status of your Kaleido-Modular-X input and output cards by looking at the card-edge LEDs (see LED Interface, on page 32), and use the Densité CPU-ETH2 local control panel and its buttons to navigate menus and adjust parameter values (see Using the Densité Frame Control Panel, on page 37).
- The loading and management of layouts is handled via a Java-based application, XEdit, accessed through a dedicated Ethernet port (refer to the Kaleido-X User's Manual).
- Grass Valley's iControl system can be used to access the card's operating parameters from a remote computer, using a convenient graphical user interface (see Remote Control Using iControl, on page 40).
- A GPI interface allows remote layout selection.
- The output resolution of the card can be controlled automatically through the EDID interface with the display.
- The RCP-200 advanced remote control panel, and the Kaleido-RCP2 control panel allow you to perform operations on the monitor wall, ceither by themselves or in association with an external keyboard and a mouse. Refer to the RCP-200, Kaleido-RCP2, and Kaleido-X documentation (available on the Kaleido-X DVD that shipped with your system).

LED Interface

KMX-3901-IN Input Card Interface

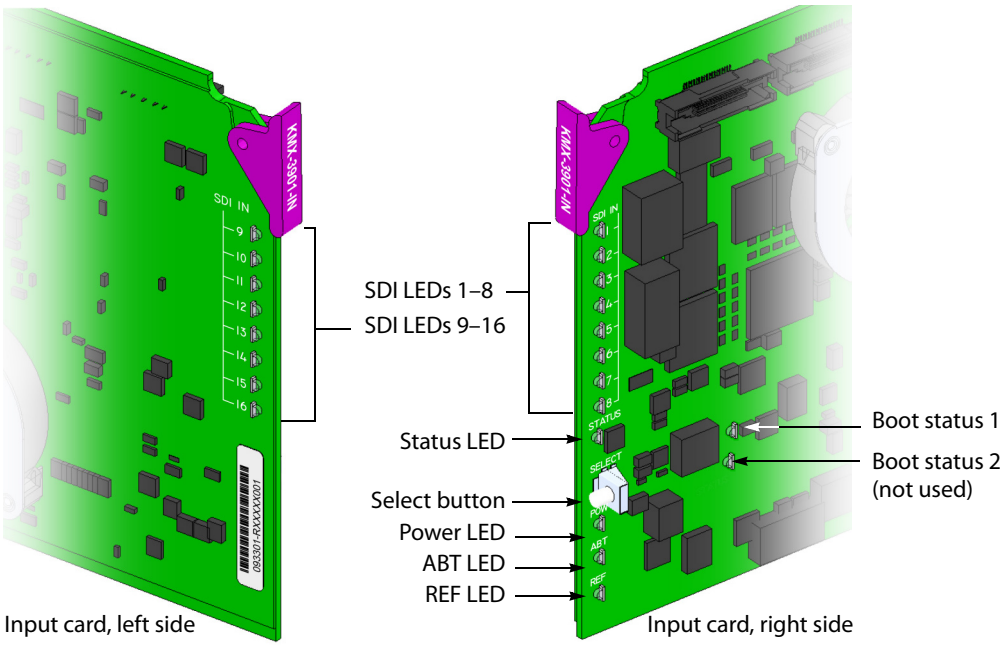

Summary view of the interface on the left side, and on the right side of a KMX-3901-IN input card

Input card Status LED

The Status LED is located on the front edge of a Kaleido-Modular-X card, immediately above the Select button, and is visible through the front access door of the Densité frame. This multi-color LED indicates the status of the card, by color, and by blinking/steady illumination:

LED	Meaning
Green	Normal (communication established with an output card)
Blinking orange	Booting (or the card is selected for local control)
Red	Default color before firmware initialization is complete / update in progress (may last up to 10 minutes)
Blinking red	Fan failure / no rear

The Status LED always shows the most severe detected error status. In the table above, error severity increases from top to bottom, with green representing no error/disabled, and blinking red the most severe error conditions.

If the Status LED is blinking orange, it means that the card is selected for local control using the Densité frame's control panel (or that the card is booting up). See Using the Densité Frame Control Panel, on page 37 for details.

If the Status LED is steady red (not blinking), use the Densité frame control panel to review card status information (see Local Control Panel Menu Structure, on page 38). If the card

status menu reports that an update is in progress, then you know that you should not interrupt this process (by reseating the card, for example).

Input card power LED

Monitors the status of the 1.8V and 3.3V power supplies on board the Kaleido-Modular-X card.

LED	Meaning
Green	OK
OFF	Failure of the 1.8V or 3.3V on-board PSUs

SDI LEDs

This group of LEDs monitors the status of the 8 or 16 inputs (depending on card model) to the Kaleido-Modular-X input cards. The frame door must be open for the LEDs to be visible.

LED	Meaning
Green	SD-SDI, HD-SDI or 3G input signal detected
Red	No input signal detected

ABT/MADI LED

This LED monitors the status of the ABT/MADI input on the Kaleido-Modular-X input cards.

LED	Meaning
Green	ABT/MADI signal detected
Red	No signal detected

REF LED

This LED monitors the status of the REF input on the Kaleido-Modular-X input cards.

LED	Meaning
Green	Black-burst or tri-level-sync signal detected
Red	No signal detected

Boot status LED 1

Monitors the status of the firmware.

LED	Meaning
Green	Normal (firmware has completed initialization and communication was established with at least one output card)
Blinking orange	Error or no communication with an output card
Blinking green/red	Transitory state during firmware initialization
Red	Initial state

Boot status LED 2

This LED is always red, and currently not relevant.

Input card FlexBridge input LEDs

Kaleido-Modular-X input cards have 2 or 4 LEDs (depending on card model) monitoring the status of the FlexBridge inputs located on their rear connector panel.

Flexbridge input LEDS on quintuple rear panel
(layout is similar on the other rear panels)

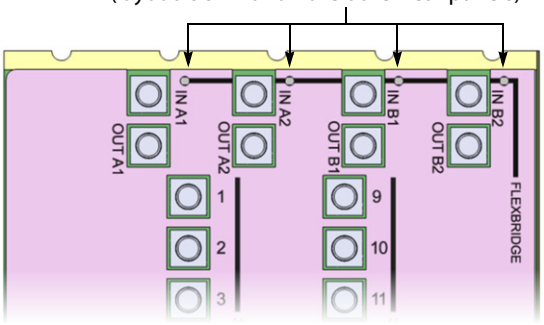

LED	Meaning
Green	HD-SDI or 3G-SDI signal detected
Red	No SDI signal detected

4K UHD Prescaler Card Interface

When a KMX-3901-IN-16-Q card operates as a 4K UHD prescaler, its SDI LEDs 3, 4, 7, 8, 11, 12, 15, and 16 are always off. SDI LEDs 1, 2, 5, 6, 9, 10, 13, and 14 monitor the status of the two quad link inputs to the prescaler card, and behave as indicated below. The frame door must be open for the LEDs to be visible.

LED	Meaning
Green	1080p 60/50 input signal detected
Orange	1080p 60/50 input signal detected, with EAV/SAV errors
Red	No input signal detected, or detected signal is not 1080p 60/50

Refer to KMX-3901-IN Input Card Interface, on page 32, for more information about the other LEDs on the card.

KMX-3901-OUT Output Card Interface

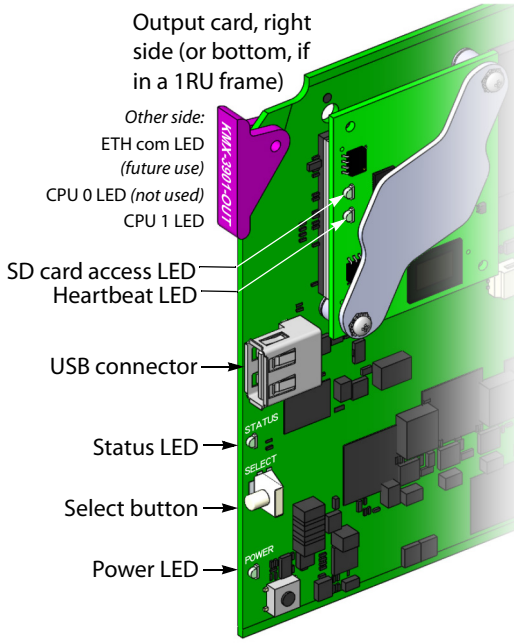

Summary view of the interface on a KMX-3901-OUT output card front edge

Output card Status LED

The Status LED is located on the front edge of a Kaleido-Modular-X card, immediately above the Select button, and is visible through the front access door of the Densité frame. This multi-color LED indicates the status of the card, by color, and by blinking/steady illumination:

LED	Meaning
Green	Normal
Blinking orange	Booting (or the card is selected for local control)
Red	Firmware initialization in progress / no Ethernet / SD card error / CPU kernel error / update in progress (may last up to 10 minutes)
Blinking red	Fan failure / no rear / duplicate IP address

The Status LED always shows the most severe detected error status. In the table above, error severity increases from top to bottom, with green representing no error/disabled, and blinking red the most severe error conditions.

If the Status LED is blinking orange, it means that the card is selected for local control using the Densité frame's control panel (or that the card is booting up). See Using the Densité Frame Control Panel, on page 37 for details.

If the Status LED is steady red (not blinking), use the Densité frame control panel to review card status information (see Local Control Panel Menu Structure, on page 38). If the card status menu reports that an update is in progress, then you know that you should not interrupt this process (by reseating the card, for example).

Output card power LED

Monitors the status of the power supplies on board the Kaleido-Modular-X card.

LED	Meaning
Green	OK
OFF	Failure of an on-board PSU, or there was a glitch on the 3.3V PSU (in which case reseating the card may resolve the problem). In the first case, reseating the card will not resolve the problem.

Output card heartbeat LED

Monitors the status of the system firmware.

LED	Meaning
Blinking red	System OK (*heartbeat* signal)

Memory card access LED

Monitors read/write operations to the SD memory card.

LED	Meaning
OFF	No read/write operations in progress
Blinking green	Read of write operation in progress

ETH communication LED

This LED is always OFF, and currently not relevant.

CPU 0 LED (not used)

This LED is always orange, and currently not relevant.

CPU 1 LED

Monitors the status of the firmware during the startup process.

LED	Meaning
Green	Normal (the Kaleido-X software, XEdit, XAdmin are available)
Blinking orange	Firmware initialization completed (waiting for the Kaleido-X software to start)
Orange	Transitory state during firmware initialization
Red	Initial state

Output card FlexBridge input LEDs

Kaleido-Modular-X output cards have 2 LEDs monitoring the status of their FlexBridge inputs 1 and 2 located on their rear connector panel.

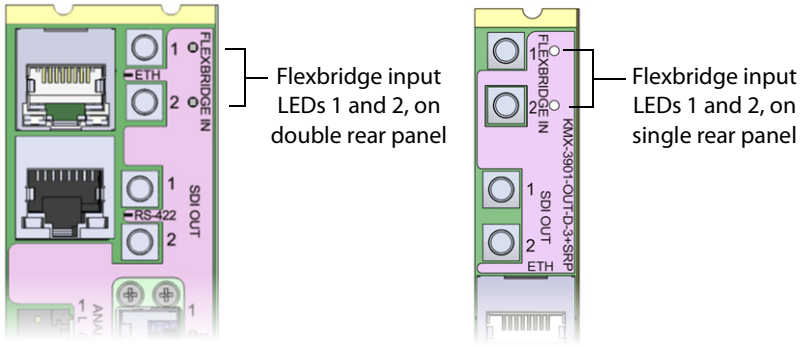

LED	Meaning
Green	HD-SDI or 3G-SDI signal detected
Red	No SDI signal detected

SFP LEDs

Kaleido-Modular-X output cards have 2 or 4 SFP LEDs (depending on rear model) located on their rear connector panel. These LEDs are always OFF, and currently not relevant.

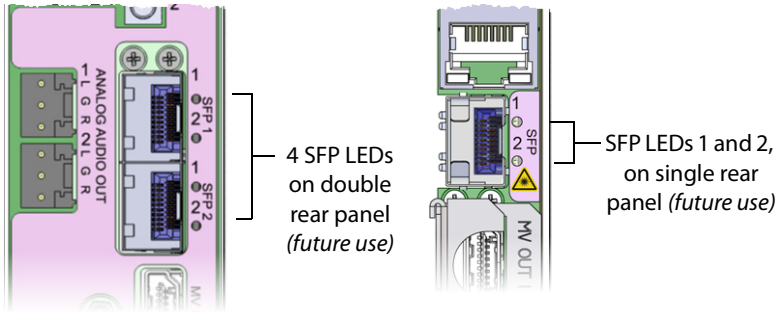

Using the Densité Frame Control Panel

All of the cards installed in a Densité frame are connected to the frame's controller card, which handles all interaction between the cards and the outside world. There are no operating controls located on the cards themselves. The controller supports remote operation via its Ethernet ports, and local operation using its integrated control panel.

The local control panel is fastened to the controller card, and consists of a display unit capable of displaying two lines of text, each 16 characters in length, and five buttons.

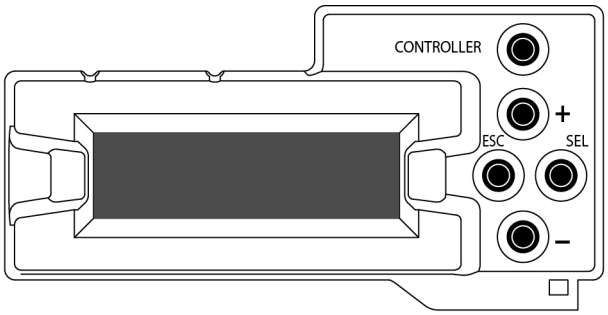

Densité CPU-ETH2 local control panel

The panel is assigned to operate any card in the frame by pressing the Select button *on the front edge of that card.* The Status LED on the selected card will then be blinking orange.

Press the CONTROLLER button on the control panel to select the controller card itself.

Navigating the Local Control Panel Menu

The Kaleido-Modular-X has operating parameters which may be adjusted locally at the controller card interface. Press the Select button *on the front edge of a Kaleido-Modular-X input or output card* to assign the local control panel to operate the card. The local control panel displays a menu that can be navigated using the four buttons located next to the display. The functionality of the buttons is as follows:

[+] and [-] Used for menu navigation and value modification.

SEL Gives access to the next menu level. When a parameter value is shown, pressing this button once enables modification of the value using the [+] and [-] buttons; pressing a second time confirms the new value.

ESC Cancels the effect of parameter value changes that have not been confirmed; pressing ESC causes the parameter to revert to its former value.
Pressing ESC moves the user back up to the previous menu level. At the main menu, ESC does not exit the menu system. To exit, press the Select button on the front edge of the card being controlled.

If no controls are operated for 30 seconds, the controller reverts to its normal standby status, and the selected card's Status LED reverts to its normal operating mode. If a parameter was changed on the card but not submitted (SEL was not pressed) and the 30 second timeout occurs, the parameters will be confirmed as if the SEL button had been pressed.

Local Control Panel Menu Structure

Where applicable, default values are underlined.

KMX-3901-OUT output card local menu

STATUS	{CARD STATUS}**	
{CARD VERSION}**		
RESOLUTION	HEAD1	{List of resolutions;* = current}**

KMX-3901-OUT output card local menu *(continued)*

	HEAD2	{List of resolutions;* = current}**
{LINK STATE}**		
FANS	{CPU FAN STATUS}**	
	{FPGA FAN STATUS}**	
NETWORK SETTINGS	FRAME IP ADDRESS EDIT	###.###.###.###
	NETMASK EDIT	###.###.###.###
	DEFAULT GW EDIT	###.###.###.###
	LINK MODE EDIT	Auto-negotiate
		100Mbps half-duplex
		100Mbps full-duplex
	OUTPUT A IP EDIT	###.###.###.###
	OUTPUT B IP EDIT	###.###.###.###
	{POSITION}**	
	{MAC ADDRESS}**	

* All KMX-3901-OUT output cards within a housing frame must have their output heads configured with the same refresh rate. If your frame is referenced, then the heads' refresh rate must also match the reference signal's refresh rate.
** Parameters shown here in braces { } will display the actual value of the item and not the text shown above.

KMX-3901-IN input card local menu

STATUS	CARD STATUS	{CARD STATUS}**	
	INPUT STATUS	1 {FORMAT}**	
		2 {FORMAT}**	
		3 {FORMAT}**	
		⋮	
		16 {FORMAT}**	
CONFIG	4K UHD PRESCALER	ENABLE	
		DISABLE	
	SFP CONFIG***	SFP OUT 1	ON
			OFF
		SFP OUT 2	ON
			OFF
		SFP OUT 3	ON
			OFF
		SFP OUT 4	ON
			OFF
{CARD VERSION}**			

** Parameters shown here in braces { } will display the actual value of the item and not the text shown above.
*** The SFP ports are not yet supported.

Kaleido-Modular-X 4K UHD prescaler local menu

STATUS	CARD STATUS	{CARD STATUS}**	OFF
	INPUT STATUS	1 {FORMAT}**	
		2 {FORMAT}**	
		3 {FORMAT}**	
		⋮	
		16 {FORMAT}**	
	REF STATUS	{EXTERNAL | URS | FREE RUN | FLEXBRIDGE}**	
CONFIG	4K UHD PRESCALER	ENABLE	
		DISABLE	
	SFP CONFIG***	SFP OUT 1	ON
			OFF
		SFP OUT 2	ON
			OFF
		SFP OUT 3	ON
			OFF
		SFP OUT 4	ON
			OFF

{CARD VERSION}**

** Parameters shown here in braces { } will display the actual value of the item and not the text shown above.
*** The SFP ports are not yet supported.

Remote Control Using iControl

The Kaleido-Modular-X may be controlled by using Grass Valley's iControl version 4.43 or later. This section describes the two control panels associated with the Kaleido-Modular-X's input and output cards and their use. Refer to the iControl User's Guide for information about setting up and operating iControl.

In iControl Navigator, iControl Web, or iControl Solo, double-click the icon for a Kaleido-Modular-X input or output card (KMX-3901-OUT, KMX-3901-IN-8-D, KMX-3901-IN-16-D, or KMX-3901-IN-16-Q) to open the associated control panel.

Kaleido-Modular-X Service Control Panels in iControl

The card label (*KMX-IN-16-D,* and *KMX-OUT* in the examples below) and the slot number where the card is installed in the Densité frame are indicated in the window's title bar.

The service control panel for Kaleido-Modular-X input cards only offers information.

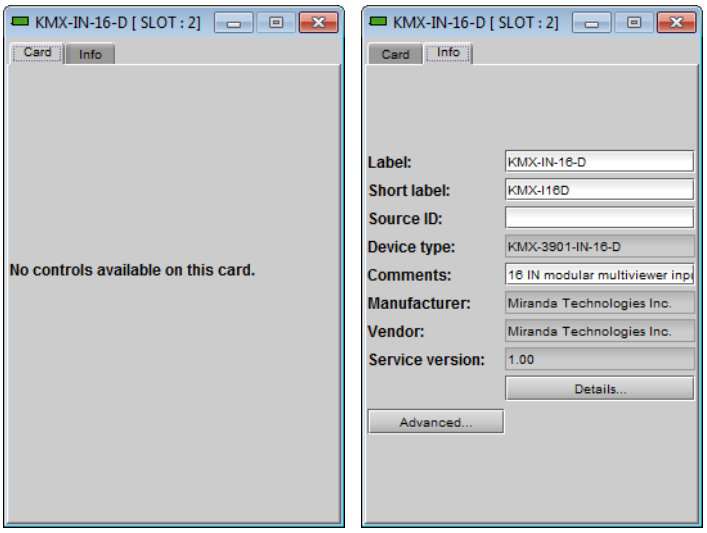

Service control panel for a Kaleido-Modular-X input card

See Info Panel on page 44 for more information.

In the **KMX-OUT** control panel window, there are three main areas: the status icon area, the navigation area, and the operating control area.

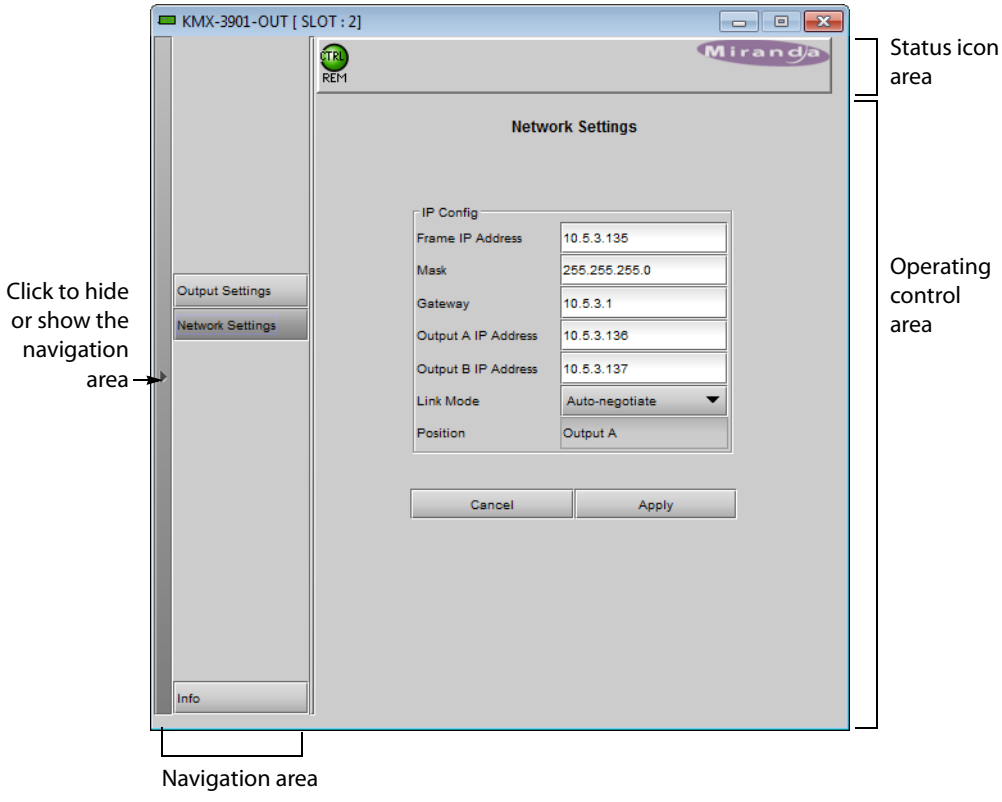

Service control panel for a Kaleido-Modular-X output card

The status icon area contains only one icon: the control status icon.

- A green control status icon

indicates that the card is available for remote control from the service control panel in iControl.
- A yellow icon

indicates that someone is controlling the card from the control panel on the housing frame (see Using the Densité Frame Control Panel, on page 37).

The navigation area contains buttons that control the contents of the main area.

- Click a button to access the associated features.
- Click the left side border (identified by a small arrow icon) to hide or reveal this area.

The operating control area contains the main operating controls for managing the Kaleido-Modular-X multiviewer's feature set. The contents change depending on the button you clicked in the navigation area. The three panels are described individually in the following sections:

- Output Settings Panel, on page 42
- Network Settings Panel, on page 43
- Info Panel, on page 44

Output Settings Panel

Set the resolution of the multiviewer output heads to an appropriate value based on the displays in use. If a display uses EDID (Extended Display Identification Data) to communicate its characteristics to the Kaleido-Modular-X multiviewer via the HDMI connector, the matching can be done automatically, in which case the detected resolution appears in the **Detected resolution** box. Select the check box to use the detected resolution. If the detected resolution is not used (either because the check box is not selected or because the display does not make the information available) the value selected in the **Output resolution** list will be used.

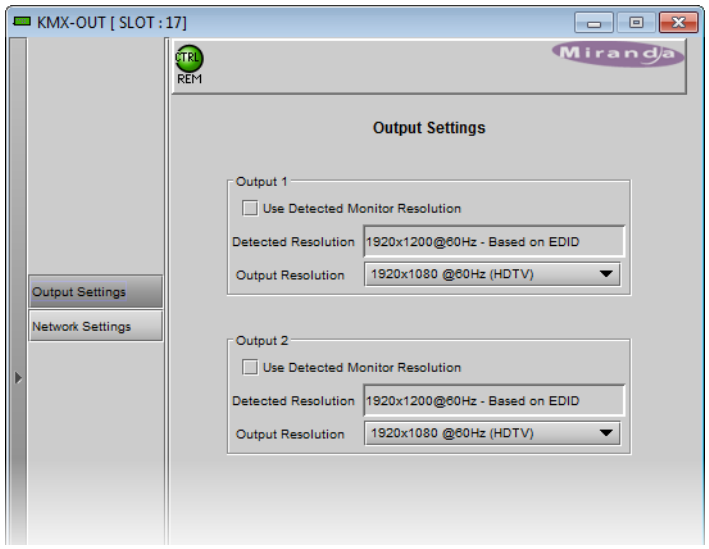

The following table lists some (but not all) output formats supported at the HDMI connections. You can customize your own timing rates for resolutions ranging from 1024 × 768 pixels up to 1920 × 1200 pixels, through the XEdit software.

Kaleido-Modular-X HDMI output resolutions

Resolution	Format name	Refresh rates (Hz)
1024 × 768	XGA	50.00, 59.94
1280 × 720	Margay	50.00, 59.94
1280 × 768	WXGA	50.00, 59.94
1280 × 1024	SXGA	50.00, 59.94
1280 × 1024	BARCO	59.94
1360 × 768	NEC	50.00, 59.94
1480 × 1200	Christie	50.00, 59.94
1600 × 1200	UXGA	50.00, 59.94
1920 × 1080	Baycat	50.00, 59.94
1920 × 1200	WUXGA	50.00, 59.94

Note: All Kaleido-Modular-X cards within a housing frame must have their output heads configured with the same refresh rate. If your frame is referenced, then the heads' refresh rate must also match the reference signal's refresh rate.

Network Settings Panel

Kaleido-Modular-X output cards are shipped with default network settings, which you must replace with values suitable for your network environment. You may need to consult your network administrator to get the correct values. Enter the appropriate IP address, mask and gateway information to configure a Kaleido-Modular-X output card within your Ethernet network.

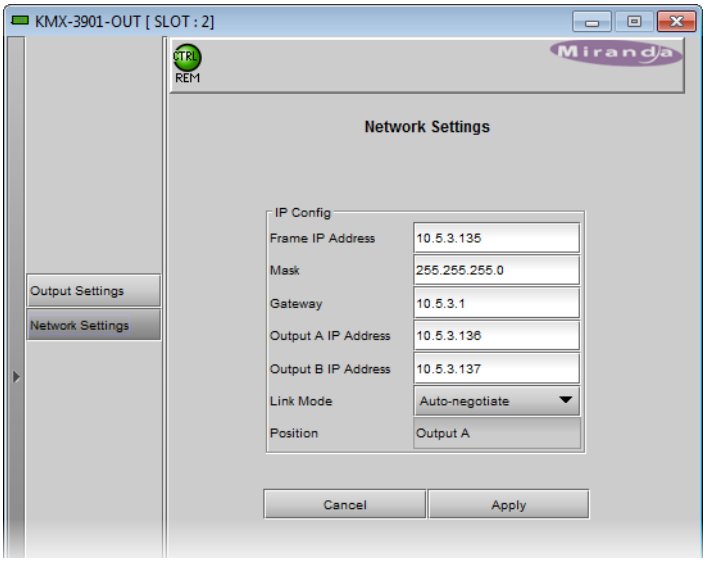

Click **Apply** to set these values into the card, or **Cancel** to leave the original values unchanged.

Notes

- These settings apply to the rear-panel Ethernet port of the Kaleido-Modular-X output cards; *not* to the Ethernet ports at the back of the Densité controller card.
- On all Grass Valley multiviewers, the network adapters are set to auto-negotiate. By default, the connection speed and duplex mode will be set automatically based on the corresponding port settings on the switch.
- The MAC Address and position of the Kaleido-Modular-X card are not configurable; the information is presented here for information only.
- Quad-head Kaleido-Modular-X systems, which include two output cards, require three IP addresses: one for each output card, and a virtual IP address for the system. A dual- or single-head system requires only one IP address (the output card's IP address automatically doubles as the system IP address). Refer to the Kaleido-Modular-X Quick Start Guide for detailed setup information.

Info Panel

When a Kaleido-Modular-X input or output card is included in an iControl environment, certain information about the card may be made available to the iControl system. In the boxes with a white background, you can type labels and comments that will make this card easier to identify in a complex setup.

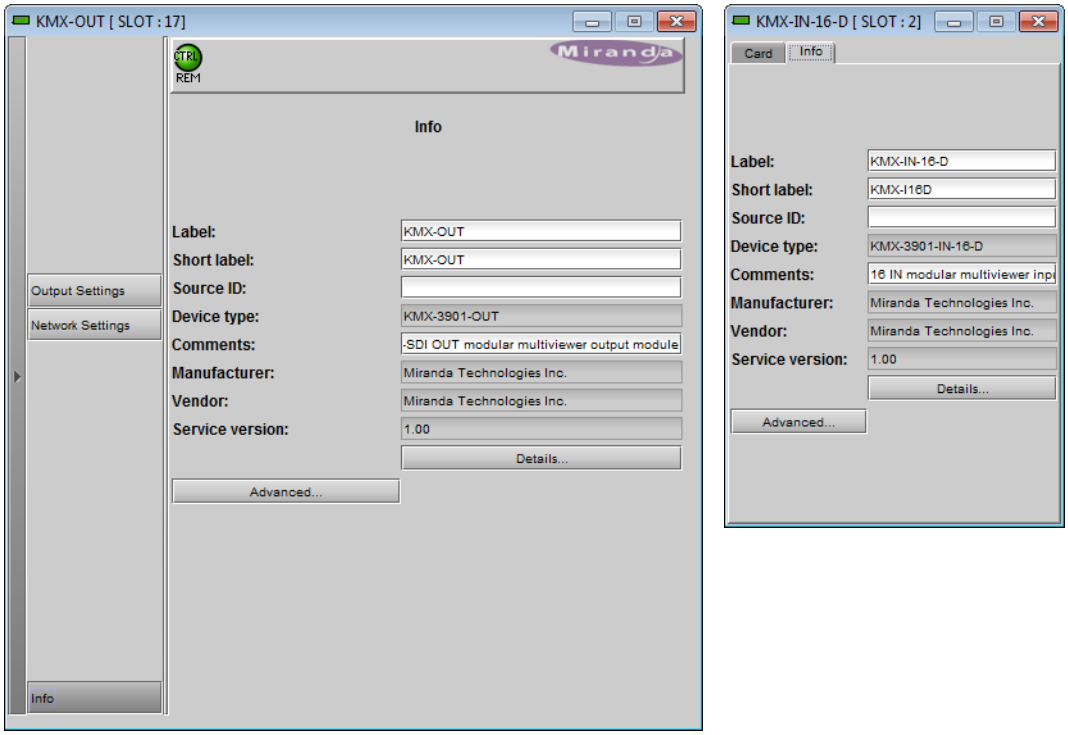

Label	Type a label to identify this Kaleido-Modular-X card when it appears in iControl applications. This label appears in the service panel's title bar, in iControl Solo, and in the iControl Navigator views
Short label	Type the shorter label that iControl uses in some cases (8 characters).
Source ID	Type a descriptive name for this Kaleido-Modular-X card.
Comments	Type any desired text.

The remaining boxes show manufacturing information about this card, including the card type (e.g., KMX-3901-OUT, KMX-3901-IN-16-D).

> Note: The services currently available with iControl do not yet recognize the 4K UHD prescaler mode. When the input card control panel reports a KMX-3901-IN-16-Q card type, there are no indications as to whether the prescaler mode is enabled or not.

Three buttons give access to additional information and controls:

Details — Reports the firmware version, service version, and panel version for this card.

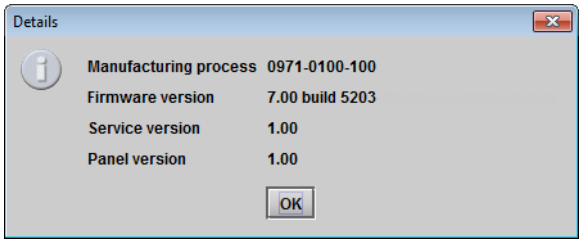

Output card Details window

Advanced — Shows the Miranda Long ID for this Kaleido-Modular-X card. The Long ID is the address of this card in the iControl network.

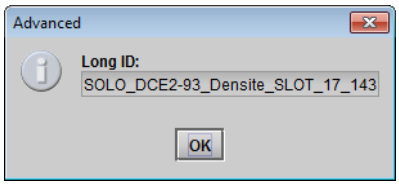

Remote system administration — Opens the **Joining Locators** window, which lists remote lookup services to which this Kaleido-Modular-X card is registered.

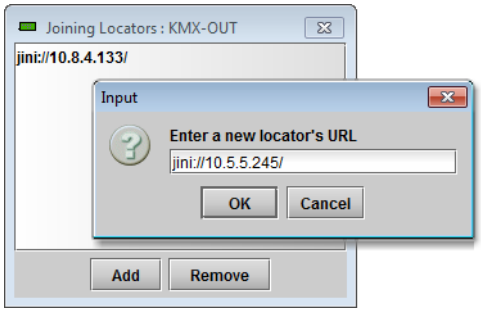

- Click **Add** to force the iControl service for this Kaleido-Modular-X card to register itself on a lookup service, by using the following syntax in the **Input** window:

  `jini://<ip_address>`

  where `<ip_address>` is the IP address of the server running the lookup service.
- Select one of the services listed in the window by clicking on it, and then click **Remove** to remove it from the list.

3 Specifications

This chapter lists equipment specifications for the Kaleido-Modular-X input, output, and companion cards, and their rear panels.

Kaleido-Modular-X Input Cards

The KMX-3901-IN-8-D cards support 8 signal inputs. The KMX-3901-IN-16-D and KMX-3901-IN-16-Q support 16 signal inputs. The supported video input types include SD-SDI, HD-SDI, 3G-SDI, and 4K UHD[1] (auto-detected). The processing delay is two fields if the video inputs are genlocked, and two or three fields if the video inputs are not genlocked. In rotation mode the processing delay may increase by one field. Signal inputs require DIN 1.0/2.3 connectors.

Video Inputs

SD-SDI inputs

Signal	4:2:2 SMPTE ST 259-C (270 Mbps), SMPTE ST 272
Formats	525 and 625
Audio	SMPTE ST 274
Return loss	> 15 dB up to 270 MHz
Alignment jitter (100 kHz)	< 0.2 UI
Timing jitter (10 Hz)	< 1 UI
Cable length	250 m (820 ft) (Belden 1694A) 150 m (492 ft) (Belden 1855A)

HD-SDI inputs

Signal	SMPTE ST 292-1 (1.485, 1.485/1.001 Gbps)
Formats[a]	720p29.97, 720p30, 720p50, 720p59.94 1080i50, 1080i59.94 1080PsF23.98, 1080PsF24, 1080PsF25, 1080PsF29.97 1080p23.98, 1080p24, 1080p25, 1080p29.97, 1080p30
Audio	SMPTE ST 299
Return loss	> 15 dB up to 1.5 GHz
Alignment jitter (100 kHz)	< 0.2 UI

1. From 4K UHD prescaler (see Kaleido-Modular-X 4K UHD Prescaler Cards, on page 50).

HD-SDI inputs *(continued)*

Timing jitter (10 Hz)	< 1 UI
Cable length	100 m (328 ft) (Belden 1694A) 45 m (148 ft) (Belden 1855A)

a. The Kaleido-X software does not distinguish between 1080PsF25 and 1080i50, between 1080PsF29.97 and 1080i59.94, between 720p29.97 and 720p30, and between 1080p29.97 and 1080p30. On the monitor wall and in XAdmin's Status and Options page, 1080PsF25 is reported as 1080i50, 1080PsF29.97 is reported as 1080i59.94, 720p30 as 720p29.97, and 1080p30 as 1080p29.97.

3G-SDI inputs

Signal	SMPTE ST 424 (2.97, 2.97/1.001 Gbps)
Formats	1080p50 1080p59.94
Audio	SMPTE ST 299
Return loss	> 15 dB up to 1.5 GHz > 10 dB up to 3 GHz
Alignment jitter (100 kHz)	< 0.3 UI
Timing jitter (10 Hz)	< 2 UI
Cable length	100 m (328 ft) (Belden 1694A) 45 m (148 ft) (Belden 1855A)

Graphic converted to HD-SDI from KXI-DVI-Bridge[a]

Signal	SMPTE ST 292-1 (1.485, 1.485/1.001 Gbps)
Format	1080p60
Cable length	100 m (328 ft) (Belden 1694A) 45 m (148 ft) (Belden 1855A)

a. A *Dual Channel DVI to HD Bridge* must be connected between the multiviewer and the PC or laptop that provides the graphics to the multiviewer. To order this optional device (Part No. KXI-DVI-BRIDGE), contact your Grass Valley sales representative.

Discrete Audio Inputs

Every Kaleido-Modular-X input card supports one ABT/MADI audio input.

ABT/MADI audio inputs

Signal	SMPTE ST 259-C (270 Mbps), SMPTE ST 305
Format	SDTI
Return Loss	>15 dB up to 270 MHz
Alignment jitter (100 kHz)	< 0.2UI
Timing jitter (10 Hz)	< 1UI

ABT/MADI audio inputs *(continued)*

Cable length	250 m (820 ft) (Belden 1694A) 150 m (492 ft) (Belden 1855A)
Connector	DIN 1.0/2.3

FlexBridge Inputs/Outputs

The KMX-3901-IN-8-D, and KMX-3901-IN-16-D support 2 FlexBridge inputs, and 2 FlexBridge outputs. The KMX-3901-IN-16-Q cards support 4 FlexBridge inputs, and 4 FlexBridge outputs.

FlexBridge inputs and outputs

Signal	SMPTE ST 424 (2.97, 2.97/1.001 Gbps)
Formats	*Proprietary*
Audio	SMPTE ST 299
Return loss	> 15 dB up to 1.5 GHz > 10 dB up to 3 GHz
Alignment jitter (100 kHz)	< 0.3 UI
Timing jitter (10 Hz)	< 2 UI
Cable length between two input cards	10 m (33 ft) (Belden 1694A) 6 m (20 ft) (Belden 1855A)
Cable length from input card to output card	50 m (164 ft) (Belden 1694A) 35 m (115 ft) (Belden 1855A)
Connector	DIN 1.0/2.3

Control

Reference Inputs

The KMX-3901-IN cards support one external reference input for system genlock.

Reference Input

Supported formats	SMPTE ST 170 SMPTE ST 318 ITU 624-4 BUT 470-6 SMPTE ST 274 SMPTE ST 296 SMPTE ST 240
Connector	DIN 1.0/2.3

LTC Inputs

The KMX-3901-IN cards support one unbalanced LTC input for clock synchronization, or for monitoring a time code source from a timer, VTR, etc.

LTC Inputs

Signal	SMPTE ST 309-1999, SMPTE ST 12-1995 (EBU-3259-E)
Level	500 mVp-p to 10 Vp-p
Impedance	>12 kΩ
Refresh rate	50/59.94 Hz
Connector	DIN 1.0/2.3

Electrical

Power consumption

KMX-3901-IN-8-D	28 W max
KMX-3901-IN-16-D	46 W max
KMX-3901-IN-16-Q	55 W max

Physical

Full spec. temperature range	0–40°C (32–104°F) (ambient)
Max. storage humidity	90% RH non-condensing
Max. functional humidity	65% RH non-condensing
Weight	
KMX-3901-IN-8-D	207 g
KMX-3901-IN-8-D-3TRP	97 g
KMX-3901-IN-16-D	351 g
KMX-3901-IN-16-D-3QRP	141 g
KMX-3901-IN-M3-D-3QRP	124 g
KMX-3901-IN-16-Q	390 g
KMX-3901-IN-16-Q-3PRP	161 g
KMX-3901-IN-M3-Q-3PRP	163 g

Kaleido-Modular-X 4K UHD Prescaler Cards

When a KMX-3901-IN-16-Q card is configured as a 4K UHD prescaler, it supports two quad link 3G-SDI signal inputs, which are assumed to be the constituent parts of two UHD 4K 3840×2160 sources. The processing delay is two fields (the video inputs must be genlocked).

Video inputs

Signal	SMPTE ST 424 (2.97, 2.97/1.001 Gbps) Level A / Level B dual link Square division
Formats	2160p50 2160p59.94
Audio	SMPTE ST 299
Return loss	> 15 dB up to 1.5 GHz > 10 dB up to 3 GHz
Alignment jitter (100 kHz)	< 0.3 UI
Timing jitter (10 Hz)	< 2 UI
Cable length	100 m (328 ft) (Belden 1694A) 45 m (148 ft) (Belden 1855A)
Connector	DIN 1.0/2.3

Video outputs

Signal	SMPTE ST 424 (2.97, 2.97/1.001 Gbps) Level A
Formats	1080p50 1080p59.94
Audio	SMPTE ST 299 First 8 channels from quadrant 1 (top left)
Alignment jitter (100 kHz)	< 0.3 UI
Timing jitter (10 Hz)	< 2 UI
Cable length	50 m (164 ft) (Belden 1694A) 35 m (115 ft) (Belden 1855A)
Connector	DIN 1.0/2.3

Electrical

Power consumption	55 W max

Physical

Full spec. temperature range	0–40°C (32–104°F) (ambient)
Max. storage humidity	90% RH non-condensing
Max. functional humidity	65% RH non-condensing
Weight	
KMX-3901-IN-16-Q	390 g
KMX-3901-IN-16-Q-3PRP	161 g

Kaleido-Modular-X Output Cards

Mosaic Outputs

The KMX-3901-OUT cards support one, or two HDMI outputs.

HDMI outputs

Signal	HDMI V1.3
Format	1024 × 768 up to 1920 × 1200, configurable Supported refresh rates: 50 Hz and 59.94 Hz
Audio	PCM 24 bits
Cable length	15 m (50 ft) with Gefen CAB-HDMI-50MM
Connector	HDMI type connector
Signal path	24 bits RGB

SDI Monitoring Outputs

The KMX-3901-OUT cards support one, or two 3G/HD-SDI outputs (with embedded audio).

HD-SDI monitoring outputs

Signal	SMPTE ST 292-1 (1.485, 1.485/1.001 Gbps)
Formats	720p50 720p59.94 1080i50 1080i59.94
Audio	SMPTE ST 299-1 (limited to one pair, embedded on group 1, pair 1)
Return loss	> 15 dB up to 1.5 GHz
Alignment jitter (100 kHz)	< 0.2 UI
Timing jitter (10 Hz)	< 2.5 UI
Cable length	100 m (328 ft) (Belden 1694A) 45 m (148 ft) (Belden 1855A)
Connectors	DIN 1.0/2.3
Quantization	8 bits

3G-SDI monitoring outputs

Signal	SMPTE ST 424 (2.97 Gbps / 2.97/1.001 Gbps)
Formats (Level A only)	1080p50 1080p59.94

3G-SDI monitoring outputs *(continued)*

Audio	SMPTE ST 299-1 (limited to one pair, embedded on group 1, pair 1)
Return loss	> 15 dB up to 1.5 GHz > 10 dB up to 3 GHz
Alignment jitter (100 kHz)	< 0.3 UI
Timing jitter (10 Hz)	< 2 UI
Cable length	100 m (328 ft) (Belden 1694A) 45 m (148 ft) (Belden 1855A)
Connectors	DIN 1.0/2.3
Quantization	8 bits

Analog Audio Outputs

KMX-3901-OUT cards with a double rear connector panel[2] support one, or two analog audio outputs.

Analog audio outputs

Signal	Unbalanced analog stereo
Impedance	10 kΩ
Level	2 V p-p
Connector	WECO

FlexBridge Inputs

The KMX-3901-OUT cards support one, or two FlexBridge inputs.

FlexBridge inputs

Signal	SMPTE ST 424 (2.97, 2.97/1.001 Gbps)
Formats	*Proprietary*
Audio	SMPTE ST 299
Return loss	> 15 dB up to 1.5 GHz > 10 dB up to 3 GHz
Alignment jitter (100 kHz)	< 0.3 UI
Timing jitter (10 Hz)	< 2 UI
Cable length from input card to output card	50 m (164 ft) (Belden 1694A) 35 m (115 ft) (Belden 1855A)
Connector	DIN 1.0/2.3

2.The single rear connector panel does not support analog audio outputs (see KMX-3901-OUT-D-3+SRP rear panel connections, on page 12). With the single panel, audio monitoring is available at the SDI and HDMI outputs only.

Communication

Ethernet

Signal	10/100 BASE-T
Standard	IEEE 802.3
Connector	RJ-45

Serial port

Signal	RS-422 (SMPTE ST 207, EBU-3245), RS-485
Connector	RJ-45[a]

a. Not available on the single rear connector panel

USB

Standard	USB version 2.0
Peripherals supported	Mouse, keyboard, memory stick
Connector	USB type A

Electrical

Power consumption

KMX-3901-OUT-S KMX-3901-OUT-D	25 W max

Physical

Full spec. temperature range	0–40°C (32–104°F) (ambient)
Max. storage humidity	90% RH non-condensing
Max. functional humidity	65% RH non-condensing
Weight	
KMX-3901-OUT-S	212 g
KMX-3901-OUT-D	212 g
KMX-3901-OUT-D-3DRP	87 g
KMX-3901-OUT-D-3+SRP	78 g

GPI-1501 GPI I/O module

This card supports 20 GPI inputs, and 8 configurable GPI inputs/outputs.

GPI input (up to 20)

Description	Contact closure to GND
Pull-up voltage	2.3 Volts
Source current	2 mA when input shorted
Low-level activation	0.8 Volts max
Over voltage	25 Volts max
Connector	DB-44

GPI bidirectional (up to 8)

Description	Contact closure to GND
Signal	Open collector 5 to 12 VDC
Connector	DB-44
Input mode	
Pull-up voltage	2.3 Volts
Source current	2 mA when input shorted
Low-level activation	0.8 Volts max
Over voltage	25 Volts max
Output mode	
Contact closure current	50 mA max
Reverse voltage	-15 Volts max
Reverse current	-50 mA max
V out low	0.6 Volts at 1.5mA

Electrical

Power consumption	1 W max

Weight

GPI-1501 card	84 g
GPI-1501-SRP-3RU rear panel	30 g

Contact Us

Grass Valley Technical Support

For technical assistance, contact our international support center, at 1-800-547-8949 (US and Canada) or +1 514 333 1772.

To obtain a local phone number for the support center nearest you, please consult the Product Support section of Grass Valley's Web site, at `http://www.grassvalley.com/support/contact`.

An online form for e-mail contact is also available from the Web site.

Corporate Head Office

Grass Valley
3499 Douglas-B.-Floreani
St-Laurent, Quebec H4S 2C6
Canada
Telephone: +1 514 333 1772
Fax: +1 514 333 9828
www.grassvalley.com