grass valley

K2 Dyno

Replay Controller

Service Manual

www.grassvalley.com

071-8702-02
February 2012

KEMA Quality

CERTIFICATE

Certificate Number: 510040.001

The Quality System of:

Grass Valley USA, LLC and its Grass Valley Affiliates

Headquarters:
400 Providence Mine Road
Nevada City, CA 95945
United States

15655 SW Greystone Ct.
Beaverton, OR 97006
United States

Brunnenweg 9
D-64331 Weiterstadt
Germany

Kapittelweg 10
4827 HG Breda
The Nederlands

2300 So. Decker Lake Blvd.
Salt Lake City, UT 84119
United States

Including its implementation, meets the requirements of the standard:

ISO 9001:2008

Scope:
The design, manufacture and support of video and audio hardware and software products and related systems.

This Certificate is valid until: June 14, 2012
This Certificate is valid as of: December 23, 2010
Certified for the first time: June 14, 2000

H. Pierre Sallé
President
KEMA-Registered Quality

The method of operation for quality certification is defined in the KEMA General Terms And Conditions For Quality And Environmental Management Systems Certifications. Integral publication of this certificate is allowed.

KEMA-Registered Quality, Inc.
4377 County Line Road
Chalfont, PA 18914
Ph: (215)997-4519
Fax: (215)997-3809
CRT 001 042108

Accredited By:
ANAB

a DEKRA company

grass valley

K2 Dyno

Replay Controller

Service Manual

www.grassvalley.com

071-8702-02
February 2012

Contacting Grass Valley

International Support Centers	**France 24 x 7**	+800 8080 2020 or +33 1 48 25 20 20	**United States/Canada 24 x 7**	+1 800 547 8949 or +1 530 478 4148
Local Support Centers (available during normal business hours)	**Asia**	**Hong Kong, Taiwan, Korea, Macau:** +852 2531 3058 **Indian Subcontinent:** +91 22 24933476 **Southeast Asia/Malaysia:** +603 7805 3884 **Southeast Asia/Singapore:** +65 6379 1313 **China:** +861 0660 159 450 **Japan:** +81 3 5484 6868		
	Australia and New Zealand: +61 1300 721 495		**Central/South America:** +55 11 5509 3443	
	Middle East: +971 4 299 64 40 **Near East and Africa:** +800 8080 2020 or +33 1 48 25 20 20			
	Europe	**Belarus, Russia, Tadzikistan, Ukraine, Uzbekistan:** +7 095 2580924 225 **Switzerland:** +41 1 487 80 02 **S. Europe/Italy-Roma:** +39 06 87 20 35 28 **-Milan:** +39 02 48 41 46 58 **S. Europe/Spain:** +34 91 512 03 50 **Benelux/Belgium:** +32 (0) 2 334 90 30 **Benelux/Netherlands:** +31 (0) 35 62 38 42 1 **N. Europe:** +45 45 96 88 70 **Germany, Austria, Eastern Europe:** +49 6150 104 444 **UK, Ireland, Israel:** +44 118 923 0499		

Copyright © Grass Valley USA, LLC. All rights reserved.
This product may be covered by one or more U.S. and foreign patents.

Grass Valley Web Site

The www.grassvalley.com web site offers the following:

Online User Documentation — Current versions of product catalogs, brochures, data sheets, ordering guides, planning guides, manuals, and release notes in .pdf format can be downloaded.

FAQ Database — Solutions to problems and troubleshooting efforts can be found by searching our Frequently Asked Questions (FAQ) database.

Software Downloads — Download software updates, drivers, and patches.

grass valley

END-OF-LIFE PRODUCT RECYCLING NOTICE

Grass Valley's innovation and excellence in product design also extends to the programs we've established to manage the recycling of our products. Grass Valley has developed a comprehensive end-of-life product take back program for recycle or disposal of end-of-life products. Our program meets the requirements of the European Union's WEEE Directive, the United States Environmental Protection Agency, and U.S. state and local agencies.

Grass Valley's end-of-life product take back program assures proper disposal by use of Best Available Technology. This program accepts any Grass Valley branded equipment. Upon request, a Certificate of Recycling or a Certificate of Destruction, depending on the ultimate disposition of the product, can be sent to the requester.

Grass Valley will be responsible for all costs associated with recycling and disposal, including freight. However, you are responsible for the removal of the equipment from your facility and packing the equipment to make it ready for pickup.

For further information on the Grass Valley product take back system please contact Grass Valley at + 800 80 80 20 20 or +33 1 48 25 20 20 from most other countries. In the U.S. and Canada please call 800-547-8949, and ask to be connected to the EH&S Department. Additional information concerning the program can be found at: www.grassvalley.com/about/environmental-policy

001187401

Contents

Safety Summaries 7

Finding Information 25

Chapter 1 Product Description

Overview description 28
Dyno controller orientation 29
FRU functional descriptions 30
- Base chassis 30
- Compact Flash boot media 30
- Jog knob 30
- Plastic cover 30
- T-bar lever assembly 31
- Type I Control panel UI board 31
- Type II Control panel UI board 31
- Type II Encoder 32
- LCD screen 32
- LCD screen inverter board 32
- Front I/O board 32
- Fan 32
- USB board 32
- Motherboard 32
- Power supply 33

Status indicators 34
- Rear panel indicators 34
- System beep codes 35

General specifications 35
Counter top installation 36

Chapter 2 Service Procedures

Exporting log files (software version 2.x) 37
Exporting log files (software version 1.x) 37
Calibrating the control panel 37
Upgrading software 38
Updating firmware (software version 2.x) 38
Updating firmware (software version 1.x) 38
Using recovery disk images 39
- About the recovery disk image process 39
- Creating a recovery disk image 40
- Restoring from a system-specific recovery disk image 41
- Restoring from a generic recovery disk image 43

Replacing a Dyno controller 44

Chapter 3 Troubleshooting problems

Step 1: Check configurations 48
Step 2: Check connections and external equipment 48
Step 3: Identify problems using the startup sequence 48
Step 4: Run hardware diagnostics 48
- Run hardware diagnostics (software version 2.x) 48
- Run hardware diagnostics (software version 1.x) 50

BIOS startup information 51
Shutdown/restart problems 51
Checking external equipment 52
- VGA display problems 52
- Keyboard and mouse problems 52

BIOS startup 52
BIOS POST error messages 52

Windows startup 56
LCD screen problems 57
Thermal problems 57
Power supply problems 57
Isolating functional problems 58

Chapter 4 Removing and replacing FRUs
Job knob removal 60
Control panel UI board identification 61
Job knob bearing assembly removal 62
Job knob replacement 64
T-bar lever handle removal 64
Compact Flash boot media removal 65
Top removal 66
Top unit cable removal Type I control panel UI board 67
Top unit cable removal Type II control panel UI board 68
Top replacement 69
T-bar lever assembly removal 69
Plastic cover removal 70
LCD screen inverter board removal 71
Type I control panel UI board removal 72
Type II control panel UI board removal 74
Type II encoder removal 76
LCD screen removal 77
Front I/O board removal 78
Fan removal 79
Motherboard removal 80
Cabling diagram with Type I control panel UI board 81
Cabling diagram with Type II control panel UI board 82
USB board removal 83
Power supply removal 84

Appendix A Trademarks and Agreements
Trademarks 86

Index 87

Safety Summaries

Read the following sections for important safety information.

- Safety Summary
- Sicherheit – Überblick
- Consignes desécurité
- Certifications and compliances
- ESD Protection

Safety Summary

Read and follow the important safety information below, noting especially those instructions related to risk of fire, electric shock or injury to persons. Additional specific warnings not listed here may be found throughout the manual.

WARNING: Any instructions in this manual that require opening the equipment cover or enclosure are for use by qualified service personnel only. To reduce the risk of electric shock, do not perform any servicing other than that contained in the operating instructions unless you are qualified to do so.

Safety terms and symbols

Terms in this manual

Safety-related statements may appear in this manual in the following form:

WARNING: Warning statements identify conditions or practices that may result in personal injury or loss of life.

CAUTION: Caution statements identify conditions or practices that may result in damage to equipment or other property, or which may cause equipment crucial to your business environment to become temporarily non-operational.

Terms on the product

These terms may appear on the product:

DANGER — A personal injury hazard is immediately accessible as you read the marking.

WARNING — A personal injury hazard exists but is not immediately accessible as you read the marking.

CAUTION — A hazard to property, product, and other equipment is present.

Symbols on the product

The following symbols may appear on the product:

Indicates that dangerous high voltage is present within the equipment enclosure that may be of sufficient magnitude to constitute a risk of electric shock.

Indicates that user, operator or service technician should refer to product manual(s) for important operating, maintenance, or service instructions.

This is a prompt to note fuse rating when replacing fuse(s). The fuse referenced in the text must be replaced with one having the ratings indicated.

Identifies a protective grounding terminal which must be connected to earth ground prior to making any other equipment connections.

Identifies an external protective grounding terminal which may be connected to earth ground as a supplement to an internal grounding terminal.

Indicates that static sensitive components are present which may be damaged by electrostatic discharge. Use anti-static procedures, equipment and surfaces during servicing.

Warnings

The following warning statements identify conditions or practices that can result in personal injury or loss of life.

Dangerous voltage or current may be present — Disconnect power and remove battery (if applicable) before removing protective panels, soldering, or replacing components.

Do not service alone — Do not internally service this product unless another person capable of rendering first aid and resuscitation is present.

Remove jewelry — Prior to servicing, remove jewelry such as rings, watches, and other metallic objects.

Avoid exposed circuitry — Do not touch exposed connections, components or circuitry when power is present.

Use proper power cord — Use only the power cord supplied or specified for this product.

Ground product — Connect the grounding conductor of the power cord to earth ground.

Operate only with covers and enclosure panels in place — Do not operate this product when covers or enclosure panels are removed.

Use correct fuse — Use only the fuse type and rating specified for this product.

Use only in dry environment — Do not operate in wet or damp conditions.

Use only in non-explosive environment — Do not operate this product in an explosive atmosphere.

High leakage current may be present — Earth connection of product is essential before connecting power.

Dual power supplies may be present — Be certain to plug each power supply cord into a separate branch circuit employing a separate service ground. Disconnect both power supply cords prior to servicing.

Double pole neutral fusing — Disconnect mains power prior to servicing.

Use proper lift points — Do not use door latches to lift or move equipment.

Avoid mechanical hazards — Allow all rotating devices to come to a stop before servicing.

Cautions

The following caution statements identify conditions or practices that can result in damage to equipment or other property

Use correct power source — Do not operate this product from a power source that applies more than the voltage specified for the product.

Use correct voltage setting — If this product lacks auto-ranging power supplies, before applying power ensure that the each power supply is set to match the power source.

Provide proper ventilation — To prevent product overheating, provide equipment ventilation in accordance with installation instructions.

Use anti-static procedures — Static sensitive components are present which may be damaged by electrostatic discharge. Use anti-static procedures, equipment and surfaces during servicing.

Do not operate with suspected equipment failure — If you suspect product damage or equipment failure, have the equipment inspected by qualified service personnel.

Ensure mains disconnect — If mains switch is not provided, the power cord(s) of this equipment provide the means of disconnection. The socket outlet must be installed near the equipment and must be easily accessible. Verify that all mains power is disconnected before installing or removing power supplies and/or options.

Route cable properly — Route power cords and other cables so that they ar not likely to be damaged. Properly support heavy cable bundles to avoid connector damage.

Use correct power supply cords — Power cords for this equipment, if provided, meet all North American electrical codes. Operation of this equipment at voltages exceeding 130 VAC requires power supply cords which comply with NEMA configurations. International power cords, if provided, have the approval of the country of use.

Use correct replacement battery — This product may contain batteries. To reduce the risk of explosion, check polarity and replace only with the same or equivalent type recommended by manufacturer. Dispose of used batteries according to the manufacturer's instructions.

Troubleshoot only to board level — Circuit boards in this product are densely populated with surface mount technology (SMT) components and application specific integrated circuits (ASICS). As a result, circuit board repair at the component level is very difficult in the field, if not impossible. For warranty compliance, do not troubleshoot systems beyond the board level.

Sicherheit – Überblick

Lesen und befolgen Sie die wichtigen Sicherheitsinformationen dieses Abschnitts. Beachten Sie insbesondere die Anweisungen bezüglich

Brand-, Stromschlag- und Verletzungsgefahren. Weitere spezifische, hier nicht aufgeführte Warnungen finden Sie im gesamten Handbuch.

⚠ ***WARNUNG: Alle Anweisungen in diesem Handbuch, die das Abnehmen der Geräteabdeckung oder des Gerätegehäuses erfordern, dürfen nur von qualifiziertem Servicepersonal ausgeführt werden. Um die Stromschlaggefahr zu verringern, führen Sie keine Wartungsarbeiten außer den in den Bedienungsanleitungen genannten Arbeiten aus, es sei denn, Sie besitzen die entsprechende Qualifikationen für diese Arbeiten.***

Sicherheit – Begriffe und Symbole

In diesem Handbuch verwendete Begriffe

Sicherheitsrelevante Hinweise können in diesem Handbuch in der folgenden Form auftauchen:

⚠ ***WARNUNG: Warnungen weisen auf Situationen oder Vorgehensweisen hin, die Verletzungs- oder Lebensgefahr bergen.***

⚠ ***VORSICHT: Vorsichtshinweise weisen auf Situationen oder Vorgehensweisen hin, die zu Schäden an Ausrüstungskomponenten oder anderen Gegenständen oder zum zeitweisen Ausfall wichtiger Komponenten in der Arbeitsumgebung führen können.***

Hinweise am Produkt

Die folgenden Hinweise können sich am Produkt befinden:

GEFAHR – Wenn Sie diesen Begriff lesen, besteht ein unmittelbares Verletzungsrisiko.

WARNUNG – Wenn Sie diesen Begriff lesen, besteht ein mittelbares Verletzungsrisiko.

VORSICHT – Es besteht ein Risiko für Objekte in der Umgebung, den Mixer selbst oder andere Ausrüstungskomponenten.

Symbole am Produkt

Die folgenden Symbole können sich am Produkt befinden:

⚠ Weist auf eine gefährliche Hochspannung im Gerätegehäuse hin, die stark genug sein kann, um eine Stromschlaggefahr darzustellen.

Weist darauf hin, dass der Benutzer, Bediener oder Servicetechniker wichtige Bedienungs-, Wartungs- oder Serviceanweisungen in den Produkthandbüchern lesen sollte.

Dies ist eine Aufforderung, beim Wechsel von Sicherungen auf deren Nennwert zu achten. Die im Text angegebene Sicherung muss durch eine Sicherung ersetzt werden, die die angegebenen Nennwerte besitzt.

Weist auf eine Schutzerdungsklemme hin, die mit dem Erdungskontakt verbunden werden muss, bevor weitere Ausrüstungskomponenten angeschlossen werden.

Weist auf eine externe Schutzerdungsklemme hin, die als Ergänzung zu einem internen Erdungskontakt an die Erde angeschlossen werden kann.

Weist darauf hin, dass es statisch empfindliche Komponenten gibt, die durch eine elektrostatische Entladung beschädigt werden können. Verwenden Sie antistatische Prozeduren, Ausrüstung und Oberflächen während der Wartung.

Warnungen

Die folgenden Warnungen weisen auf Bedingungen oder Vorgehensweisen hin, die Verletzungs- oder Lebensgefahr bergen:

Gefährliche Spannungen oder Ströme – Schalten Sie den Strom ab, und entfernen Sie ggf. die Batterie, bevor sie Schutzabdeckungen abnehmen, löten oder Komponenten austauschen.

Servicearbeiten nicht alleine ausführen – Führen Sie interne Servicearbeiten nur aus, wenn eine weitere Person anwesend ist, die erste Hilfe leisten und Wiederbelebungsmaßnahmen einleiten kann.

Schmuck abnehmen – Legen Sie vor Servicearbeiten Schmuck wie Ringe, Uhren und andere metallische Objekte ab.

Keine offen liegenden Leiter berühren – Berühren Sie bei eingeschalteter Stromzufuhr keine offen liegenden Leitungen, Komponenten oder Schaltungen.

Richtiges Netzkabel verwenden – Verwenden Sie nur das mitgelieferte Netzkabel oder ein Netzkabel, das den Spezifikationen für dieses Produkt entspricht.

Gerät erden – Schließen Sie den Erdleiter des Netzkabels an den Erdungskontakt an.

Gerät nur mit angebrachten Abdeckungen und Gehäuseseiten betreiben – Schalten Sie dieses Gerät nicht ein, wenn die Abdeckungen oder Gehäuseseiten entfernt wurden.

Richtige Sicherung verwenden – Verwenden Sie nur Sicherungen, deren Typ und Nennwert den Spezifikationen für dieses Produkt entsprechen.

Gerät nur in trockener Umgebung verwenden – Betreiben Sie das Gerät nicht in nassen oder feuchten Umgebungen.

Gerät nur verwenden, wenn keine Explosionsgefahr besteht – Verwenden Sie dieses Produkt nur in Umgebungen, in denen keinerlei Explosionsgefahr besteht.

Hohe Kriechströme – Das Gerät muss vor dem Einschalten unbedingt geerdet werden.

Doppelte Spannungsversorgung kann vorhanden sein – Schließen Sie die beiden Anschlußkabel an getrennte Stromkreise an. Vor Servicearbeiten sind beide Anschlußkabel vom Netz zu trennen.

Zweipolige, neutrale Sicherung – Schalten Sie den Netzstrom ab, bevor Sie mit den Servicearbeiten beginnen.

Fassen Sie das Gerät beim Transport richtig an – Halten Sie das Gerät beim Transport nicht an Türen oder anderen beweglichen Teilen fest.

Gefahr durch mechanische Teile – Warten Sie, bis der Lüfter vollständig zum Halt gekommen ist, bevor Sie mit den Servicearbeiten beginnen.

Vorsicht

Die folgenden Vorsichtshinweise weisen auf Bedingungen oder Vorgehensweisen hin, die zu Schäden an Ausrüstungskomponenten oder anderen Gegenständen führen können:

Gerät nicht öffnen – Durch das unbefugte Öffnen wird die Garantie ungültig.

Richtige Spannungsquelle verwenden – Betreiben Sie das Gerät nicht an einer Spannungsquelle, die eine höhere Spannung liefert als in den Spezifikationen für dieses Produkt angegeben.

Gerät ausreichend belüften – Um eine Überhitzung des Geräts zu vermeiden, müssen die Ausrüstungskomponenten entsprechend den Installationsanweisungen belüftet werden. Legen Sie kein Papier unter das Gerät. Es könnte die Belüftung behindern. Platzieren Sie das Gerät auf einer ebenen Oberfläche.

Antistatische Vorkehrungen treffen – Es gibt statisch empfindliche Komponenten, die durch eine elektrostatische Entladung beschädigt werden können. Verwenden Sie antistatische Prozeduren, Ausrüstung und Oberflächen während der Wartung.

CF-Karte nicht mit einem PC verwenden – Die CF-Karte ist speziell formatiert. Die auf der CF-Karte gespeicherte Software könnte gelöscht werden.

Gerät nicht bei eventuellem Ausrüstungsfehler betreiben – Wenn Sie einen Produktschaden oder Ausrüstungsfehler vermuten, lassen Sie die Komponente von einem qualifizierten Servicetechniker untersuchen.

Kabel richtig verlegen – Verlegen Sie Netzkabel und andere Kabel so, dass Sie nicht beschädigt werden. Stützen Sie schwere Kabelbündel ordnungsgemäß ab, damit die Anschlüsse nicht beschädigt werden.

Richtige Netzkabel verwenden – Wenn Netzkabel mitgeliefert wurden, erfüllen diese alle nationalen elektrischen Normen. Der Betrieb dieses Geräts mit Spannungen über 130 V AC erfordert Netzkabel, die NEMA-Konfigurationen entsprechen. Wenn internationale Netzkabel mitgeliefert wurden, sind diese für das Verwendungsland zugelassen.

Richtige Ersatzbatterie verwenden – Dieses Gerät enthält eine Batterie. Um die Explosionsgefahr zu verringern, prüfen Sie die Polarität und tauschen die Batterie nur gegen eine Batterie desselben Typs oder eines gleichwertigen, vom Hersteller empfohlenen Typs aus. Entsorgen Sie gebrauchte Batterien entsprechend den Anweisungen des Batterieherstellers.

Das Gerät enthält keine Teile, die vom Benutzer gewartet werden können. Wenden Sie sich bei Problemen bitte an den nächsten Händler.

Consignes desécurité

Il est recommandé de lire, de bien comprendre et surtout de respecter les informations relatives à la sécurité qui sont exposées ci-après, notamment les consignes destinées à prévenir les risques d'incendie, les décharges électriques et les blessures aux personnes. Les avertissements complémentaires, qui ne sont pas nécessairement repris ci-dessous, mais présents dans toutes les sections du manuel, sont également à prendre en considération.

⚠ ***AVERTISSEMENT: Toutes les instructions présentes dans ce manuel qui concernent l'ouverture des capots ou des logements de cet équipement sont destinées exclusivement à des membres qualifiés du personnel de maintenance. Afin de diminuer les risques de décharges électriques, ne procédez à aucune intervention d'entretien autre que celles contenues dans le manuel de l'utilisateur, à moins que vous ne soyez habilité pour le faire.***

Consignes et symboles de sécurité

Termes utilisés dans ce manuel

Les consignes de sécurité présentées dans ce manuel peuvent apparaître sous les formes suivantes :

⚠ ***AVERTISSEMENT: Les avertissements signalent des conditions ou des pratiques susceptibles d'occasionner des blessures graves, voire même fatales.***

⚠ ***MISE EN GARDE: Les mises en garde signalent des conditions ou des pratiques susceptibles d'occasionner un endommagement à l'équipement ou aux installations, ou de rendre l'équipement temporairement non opérationnel, ce qui peut porter préjudice à vos activités.***

Signalétique apposée sur le produit

La signalétique suivante peut être apposée sur le produit :

DANGER — risque de danger imminent pour l'utilisateur.

AVERTISSEMENT — Risque de danger non imminent pour l'utilisateur.

MISE EN GARDE — Risque d'endommagement du produit, des installations ou des autres équipements.

Symboles apposés sur le produit

Les symboles suivants peut être apposés sur le produit :

⚠ Signale la présence d'une tension élevée et dangereuse dans le boîtier de l'équipement ; cette tension peut être suffisante pour constituer un risque de décharge électrique.

Signale que l’utilisateur, l’opérateur ou le technicien de maintenance doit faire référence au(x) manuel(s) pour prendre connaissance des instructions d’utilisation, de maintenance ou d’entretien.

Il s’agit d’une invite à prendre note du calibre du fusible lors du remplacement de ce dernier. Le fusible auquel il est fait référence dans le texte doit être remplacé par un fusible du même calibre.

Identifie une borne de protection de mise à la masse qui doit être raccordée correctement avant de procéder au raccordement des autres équipements.

I dentifie une borne de protection de mise à la masse qui peut être connectée en tant que borne de mise à la masse supplémentaire.

Signale la présence de composants sensibles à l’électricité statique et qui sont susceptibles d’être endommagés par une décharge électrostatique. Utilisez des procédures, des équipements et des surfaces antistatiques durant les interventions d’entretien.

Avertissements

Les avertissements suivants signalent des conditions ou des pratiques susceptibles d’occasionner des blessures graves, voire même fatales :

Présence possible de tensions ou de courants dangereux — Mettez hors tension, débranchez et retirez la pile (le cas échéant) avant de déposer les couvercles de protection, de défaire une soudure ou de remplacer des composants.

Ne procédez pas seul à une intervention d’entretien — Ne réalisez pas une intervention d’entretien interne sur ce produit si une personne n’est pas présente pour fournir les premiers soins en cas d’accident.

Retirez tous vos bijoux — Avant de procéder à une intervention d’entretien, retirez tous vos bijoux, notamment les bagues, la montre ou tout autre objet métallique.

Évitez tout contact avec les circuits exposés — Évitez tout contact avec les connexions, les composants ou les circuits exposés s’ils sont sous tension.

Utilisez le cordon d’alimentation approprié — Utilisez exclusivement le cordon d’alimentation fourni avec ce produit ou spécifié pour ce produit.

Raccordez le produit à la masse — Raccordez le conducteur de masse du cordon d’alimentation à la borne de masse de la prise secteur.

Utilisez le produit lorsque les couvercles et les capots sont en place — N’utilisez pas ce produit si les couvercles et les capots sont déposés.

Utilisez le bon fusible — Utilisez exclusivement un fusible du type et du calibre spécifiés pour ce produit.

Utilisez ce produit exclusivement dans un environnement sec — N’utilisez pas ce produit dans un environnement humide.

Utilisez ce produit exclusivement dans un environnement non explosible — N’utilisez pas ce produit dans un environnement dont l’atmosphère est explosible.

Présence possible de courants de fuite — Un raccordement à la masse est indispensable avant la mise sous tension.

Deux alimentations peuvent être présentes dans l'équipement — Assurez vous que chaque cordon d'alimentation est raccordé à des circuits de terre séparés. Débranchez les deux cordons d'alimentation avant toute intervention.

Fusion neutre bipolaire — Débranchez l'alimentation principale avant de procéder à une intervention d'entretien.

Utilisez les points de levage appropriés — Ne pas utiliser les verrous de la porte pour lever ou déplacer l'équipement.

Évitez les dangers mécaniques — Laissez le ventilateur s'arrêter avant de procéder à une intervention d'entretien.

Mises en garde

Les mises en garde suivantes signalent les conditions et les pratiques susceptibles d'occasionner des endommagements à l'équipement et aux installations :

N'ouvrez pas l'appareil — Toute ouverture prohibée de l'appareil aura pour effet d'annuler la garantie.

Utilisez la source d'alimentation adéquate — Ne branchez pas ce produit à une source d'alimentation qui utilise une tension supérieure à la tension nominale spécifiée pour ce produit.

Assurez une ventilation adéquate — Pour éviter toute surchauffe du produit, assurez une ventilation de l'équipement conformément aux instructions d'installation. Ne déposez aucun document sous l'appareil – ils peuvent gêner la ventilation. Placez l'appareil sur une surface plane.

Utilisez des procédures antistatiques - Les composants sensibles à l'électricité statique présents dans l'équipement sont susceptibles d'être endommagés par une décharge électrostatique. Utilisez des procédures, des équipements et des surfaces antistatiques durant les interventions d'entretien.

N'utilisez pas la carte CF avec un PC — La carte CF a été spécialement formatée. Le logiciel enregistré sur la carte CF risque d'être effacé.

N'utilisez pas l'équipement si un dysfonctionnement est suspecté — Si vous suspectez un dysfonctionnement du produit, faites inspecter celui-ci par un membre qualifié du personnel d'entretien.

Acheminez les câbles correctement — Acheminez les câbles d'alimentation et les autres câbles de manière à ce qu'ils ne risquent pas d'être endommagés. Supportez correctement les enroulements de câbles afin de ne pas endommager les connecteurs.

Utilisez les cordons d'alimentation adéquats — Les cordons d'alimentation de cet équipement, s'ils sont fournis, satisfont aux exigences de toutes les réglementations régionales. L'utilisation de cet équipement à des tensions dépassant les 130 V en c.a. requiert des cordons d'alimentation qui satisfont aux exigences des configurations NEMA. Les cordons internationaux, s'ils sont fournis, ont reçu l'approbation du pays dans lequel l'équipement est utilisé.

Utilisez une pile de remplacement adéquate — Ce produit renferme une pile. Pour réduire le risque d'explosion, vérifiez la polarité et ne remplacez la pile que par une pile du même type, recommandée par le fabricant. Mettez les piles usagées au rebut conformément aux instructions du fabricant des piles.

Cette unité ne contient aucune partie qui peut faire l'objet d'un entretien par l'utilisateur. Si un problème survient, veuillez contacter votre distributeur local.

Certifications and compliances

Canadian certified power cords

Canadian approval includes the products and power cords appropriate for use in the North America power network. All other power cords supplied are approved for the country of use.

FCC emission control

This equipment has been tested and found to comply with the limits for a Class A digital device, pursuant to Part 15 of the FCC Rules. These limits are designed to provide reasonable protection against harmful interference when the equipment is operated in a commercial environment. This equipment generates, uses, and can radiate radio frequency energy and, if not installed and used in accordance with the instruction manual, may cause harmful interference to radio communications. Operation of this equipment in a residential area is likely to cause harmful interference in which case the user will be required to correct the interference at his own expense. Changes or modifications not expressly approved by Grass Valley can affect emission compliance and could void the user's authority to operate this equipment.

Canadian EMC Notice of Compliance

This digital apparatus does not exceed the Class A limits for radio noise emissions from digital apparatus set out in the Radio Interference Regulations of the Canadian Department of Communications.

Le présent appareil numérique n'émet pas de bruits radioélectriques dépassant les limites applicables aux appareils numériques de la classe A préscrites dans le Règlement sur le brouillage radioélectrique édicté par le ministère des Communications du Canada.

EN55103 1/2 Class A warning

This product has been evaluated for Electromagnetic Compatibility under the EN 55103-1/2 standards for Emissions and Immunity and meets the requirements for E4 environment.

This product complies with Class A (E4 environment). In a domestic environment this product may cause radio interference in which case the user may be required to take adequate measures.

FCC emission limits

This device complies with Part 15 of the FCC Rules. Operation is subject to the following two conditions: (1) This device may not cause harmful interference, and (2) this device must accept any interference received, including interference that may cause undesirable operation.

Laser compliance

Laser safety requirements

This product may contain a Class 1 certified laser device. Operating this product outside specifications or altering its original design may result in hazardous radiation exposure, and may be considered an act of modifying or new manufacturing of a laser product under U.S. regulations contained in 21CFR Chapter 1, subchapter J or CENELEC regulations in HD 482 S1. People performing such an act are required by law to recertify and reidentify this product in accordance with provisions of 21CFR subchapter J for distribution within the U.S.A., and in accordance with CENELEC HD 482 S1 for distribution within countries using the IEC 825 standard.

Laser safety

Laser safety in the United States is regulated by the Center for Devices and Radiological Health (CDRH). The laser safety regulations are published in the "Laser Product Performance Standard," Code of Federal Regulation (CFR), Title 21, Subchapter J.

The International Electrotechnical Commission (IEC) Standard 825, "Radiation of Laser Products, Equipment Classification, Requirements and User's Guide," governs laser products outside the United States. Europe and member nations of the European Free Trade Association fall under the jurisdiction of the Comité Européen de Normalization Electrotechnique (CENELEC).

Safety certification

This product has been evaluated and meets the following Safety Certification Standards:

Standard	Designed/tested for compliance with:
ANSI/UL 60950-1	Safety of Information Technology Equipment, including Electrical Business Equipment (Second edition 2007).
IEC 60950-1 with CB cert.	Safety of Information Technology Equipment, including Electrical Business Equipment (Second edition, 2005).
CAN/CSA C22.2 No. 60950-1	Safety of Information Technology Equipment, including Electrical Business Equipment (Second edition 2007).
BS EN 60950-1	Safety of Information Technology Equipment, including Electrical Business Equipment 2006.

ESD Protection

Electronics today are more susceptible to electrostatic discharge (ESD) damage than older equipment. Damage to equipment can occur by ESD fields that are smaller than you can feel. Implementing the information in this section will help you protect the investment that you have made in purchasing Grass Valley equipment. This section contains Grass Valley's recommended ESD guidelines that should be followed when handling electrostatic discharge sensitive (ESDS) items. These minimal recommendations are based on the information in the "Sources of ESD and Risks" area. The information in "Grounding Requirements for Personnel" on page 22 is provided to assist you in selecting an appropriate grounding method.

Recommended ESD Guidelines

Follow these guidelines when handling Grass Valley equipment:

- Only trained personnel that are connected to a grounding system should handle ESDS items.
- Do not open any protective bag, box, or special shipping packaging until you have been grounded.

Note: When a Personal Grounding strap is unavailable, as an absolute minimum, touch a metal object that is touching the floor (for example, a table, frame, or rack) to discharge any static energy before touching an ESDS item

- Open the anti-static packaging by slitting any existing adhesive tapes. Do not tear the tapes off.
- Remove the ESDS item by holding it by its edges or by a metal panel.
- Do not touch the components of an ESDS item unless it is absolutely necessary to configure or repair the item.
- Keep the ESDS work area clear of all nonessential items such as coffee cups, pens, wrappers and personal items as these items can discharge static. If you need to set an ESDS item down, place it on an anti-static mat or on the anti-static packaging.

Sources of ESD and Risks

The following information identifies possible sources of electrostatic discharge and can be used to help establish an ESD policy.

Personnel

One of the largest sources of static is personnel. The static can be released from a person's clothing and shoes.

Environment

The environment includes the humidity and floors in a work area. The humidity level must be controlled and should not be allowed to fluctuate over a broad range. Relative humidity (RH) is a major part in determining the level of static that is being generated.

For example, at 10% - 20% RH a person walking across a carpeted floor can develop 35kV; yet when the relative humidity is increased to 70% - 80%, the person can only generate 1.5kV.

Static is generated as personnel move (or as equipment is moved) across a floor's surface. Carpeted and waxed vinyl floors contribute to static build up.

Work Surfaces

Painted or vinyl-covered tables, chairs, conveyor belts, racks, carts, anodized surfaces, plexiglass covers, and shelving are all static generators.

Equipment

Any equipment commonly found in an ESD work area, such as solder guns, heat guns, blowers, etc., should be grounded.

Materials

Plastic work holders, foam, plastic tote boxes, pens, packaging containers and other items commonly found at workstations can generate static electricity.

Grounding Requirements for Personnel

The information in this section is provided to assist you in selecting a grounding method. This information is taken from ANSI/ESD S20.20-2007 (Revision of ANSI/ ESD S20.20-1999).

Product Qualification

Personnel Grounding Technical Requirement	Test Method	Required Limits
Wrist Strap System*	ANSI/ESD S1.1 (Section 5.11)	$< 3.5 \times 10^7$ ohm
Flooring / Footwear System – Method 1	ANSI/ESD STM97.1	$< 3.5 \times 10^7$ ohm
Flooring / Footwear System – Method 2 (both required)	ANSI/ESD STM97.1	$< 10^9$ ohm
	ANSI/ESD STM97.2	< 100 V

Product qualification is normally conducted during the initial selection of ESD control products and materials. Any of the following methods can be used: product specification review, independent laboratory evaluation, or internal laboratory evaluation.

Compliance Verification

Personnel Grounding Technical Requirement	Test Method	Required Limits
Wrist Strap System*	ESD TR53 Wrist Strap Section	$< 3.5 \times 10^7$ ohm
Flooring / Footwear System – Method 1	ESD TR53 Flooring Section and ESD TR53 Footwear Section	$< 3.5 \times 10^7$ ohm

Personnel Grounding Technical Requirement	Test Method	Required Limits
Flooring / Footwear System – Method 2 (both required)	ESD TR53 Flooring Section and ESD TR53 Footwear Section	$< 1.0 \times 10^9$ ohm

* For situations where an ESD garment is used as part of the wrist strap grounding path, the total system resistance, including the person, garment, and grounding cord, must be less than 3.5×10^7 ohm.

Finding Information

This service manual provides procedures for servicing the K2™ Dyno™ Replay Controller to the field-replaceable unit level. Use this manual to isolate problems to a board or module, such as the Power Supply, and to make repairs through module exchange.

How this manual is organized

This manual is organized around the tasks required to service the Dyno controller. The following describes the chapters included in this manual:

Chapter 1, *Product Description* — Describes the key features, system components, and status indicators of the Dyno controller.

Chapter 2, *Service Procedures* — Contains procedures for periodic maintenance and repair.

Chapter 3, *Troubleshooting problems* — Contains problem descriptions with steps for diagnosing and correcting the cause of the problem. Use this information if you are having trouble with your Dyno controller.

Chapter 4, *Removing and replacing FRUs* — Contains procedures for removing and replacing field replaceable hardware components.

Getting more information

The following sections help you find the information you need in product manuals and elsewhere.

K2 documentation

Read the following descriptions to locate the information you need.

K2 Dyno Replay System Quick Start Guide — You receive this guide in the product packaging with your K2 Dyno Replay Controller. The Quick Start Guide provides step-by-step installation instructions for basic installation and operation of the replay system, which includes the K2 Dyno Replay Controller and the K2 Summit Production Client.

Release Notes — The release notes contain the latest information about the software shipped on your system. There are K2 Release Notes and K2 Dyno Replay Controller Release Notes. The information in release notes includes software upgrade instructions, software specifications and requirements, feature changes from the previous releases, and any known problems.

K2 Documentation Set — Except for the release notes, the full set of support documentation, including this manual, is available in the K2 Documentation Set. You can find the K2 Documentation Set on the Grass Valley website. The following URL allows you to browse by K2 Dyno software version:

http://www.grassvalley.com/dl/k2_dyno

The K2 Documentation Set includes the following documents:

- **K2 Dyno Replay System Quick Start Guide** — As described above.
- **K2 Dyno Replay Controller User Manual** — Describes Dyno controller applications and provides instructions for configuring and operating the product.

- **K2 Dyno Replay Controller Service Manual** — Contains information on servicing and maintenance.
- **K2 Summit Production Client Quick Start Guide** — The Quick Start Guide provides step-by-step installation instructions for basic installation and operation of K2 systems, including recording and playing clips.
- **K2 AppCenter User Guide** — Describes K2 applications and provides instructions for configuring and operating the product.
- **K2 System Guide** — Contains the product specifications and step-by-step instructions for modifying system settings.
- **K2 Cabling Guide** — Contains diagrams for cabling the devices of the K2 Storage Area Network.
- **K2 SAN Installation and Service Manual** — Contains installation, configuration, and maintenance procedures for shared storage options.
- **RAID Instruction Manuals** — There is an Instruction Manual for each type of RAID storage device that can be a part of a K2 system. These manuals contain procedures for configuring and servicing the device.
- **K2 Client Service Manual** — Contains information on servicing and maintenance.

NetCentral documentation

The NetCentral product has its own documentation set, described as follows:

- **NetCentral Quick Start Guide** — Provides an overview of the installation process to quickly set up and run NetCentral.
- **NetCentral Installation Guide** — Identifies requirements and procedures to correctly set up servers and devices, as well as provides detailed instructions to install and configure NetCentral software.
- **NetCentral User Guide** — Describes how to use the NetCentral Manager to monitor devices.
- **NetCentral Help** — From the NetCentral interface access on-line help. Select **Help | NetCentral Help Topics**.

Also find information about monitoring a specific product in that product's manuals.

Grass Valley Web Site

This public Web site contains all the latest manuals and documentation, and additional support information. Use the following URL.

http://www.grassvalley.com.

Chapter 1

Product Description

Topics in this section include the following:

- "Overview description" on page 28
- "Dyno controller orientation" on page 29
- "FRU functional descriptions" on page 30
- "Status indicators" on page 34
- "General specifications" on page 35
- "Counter top installation" on page 36

Overview description

The Dyno controller is a compact slow-motion controller designed for sports production and other live event production. It features a touch-screen interface, external VGA screen, high-speed Gigabit Ethernet connection, USB connectors, T-bar lever, jog knob, and switcher quality buttons.

The Dyno controller records and plays using industry standard files. It connects to the K2 Summit Production Client for media storage. It can also be connected to a K2 SAN. It supports a networked environment using standard Gigabit Ethernet networks for file sharing.

The Dyno controller provides a variety of features including speed, editing, effects, multi-user operation, an efficient user interface, and immediate content packaging. Interface tools include thumbnail icons, status indicators, specialized windows, and drag-and-drop operations for speedy and easy use.

Refer to the *K2 Dyno Replay Controller User Manual* for descriptions of features, controls, applications, and subsystems.

Dyno controller orientation

The following illustration shows the location of Field Replaceable Units (FRUs) and other components in the Dyno controller.

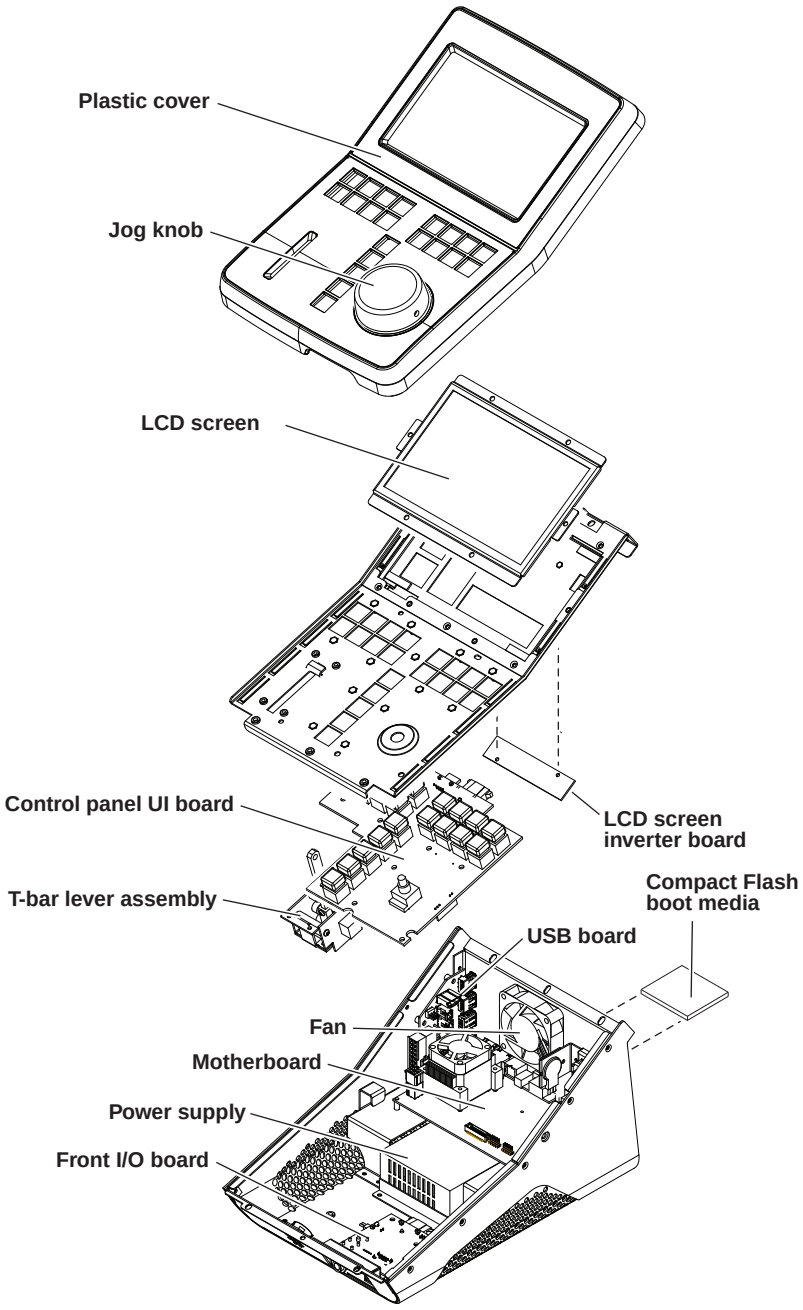

The Type I control panel UI board with integrated encoder is shown. The Type II control panel UI board is in a similar position. With the Type II control panel UI board there is a also a Type II encoder (not shown) that is a separate unit, rather than being integrated into the board.

FRU functional descriptions

The Field Replaceable Units (FRUs) described in this section are as follows:

- "Base chassis"
- "Compact Flash boot media"
- "Jog knob"
- "Plastic cover"
- "T-bar lever assembly"
- "Type I Control panel UI board"
- "LCD screen"
- "LCD screen inverter board"
- "Front I/O board"
- "Fan"
- "USB board"
- "Motherboard"
- "Power supply"

For procedures, refer to Chapter 4, *Removing and replacing FRUs*.

Base chassis

For some serious system faults or for mechanical damage, the entire Dyno controller can be replaced as a base chassis FRU. Refer to "Replacing a Dyno controller" on page 44.

Compact Flash boot media

The Compact Flash boot media contains the system drive, also known as the C: drive. The C: drive contains application and operating system files.

Refer to "Compact Flash boot media removal" on page 65 for procedures.

Jog knob

The jog knob is 60mm, weighted, and rubber encased with tactile relief.

Refer to "Job knob removal" on page 60 for procedures.

Plastic cover

The plastic top cover provides the finished work surface with access holes for controls.

Refer to "Plastic cover removal" on page 70 for procedures.

T-bar lever assembly

This is the complete mechanism which includes the front panel T-bar lever and the unit in which it is housed. In case it is damaged or otherwise inoperable, it can be replaced separately.

Refer to "T-bar lever assembly removal" on page 69 for procedures.

Type I Control panel UI board

This board provides the front control panel user interface for the Dyno controller, including the following functionality:

- 21 backlit, tri-color, momentary contact tactile buttons in 3 banks
- Jog knob interface and encoder
- USB interface to PC Motherboard
- Push Button Matrix Scanner, for 21 top panel buttons
- T-bar lever A/D interface
- SPI Port to LCD screen Controller
- LED driver interface
- Button LED Dimming
- Embedded Program Flash and SRAM memory
- Display Interface
- LCD screen controller

Refer to "Type I control panel UI board removal" on page 72 for procedures.

Type II Control panel UI board

This board provides the front control panel user interface for the Dyno controller, including the following functionality:

- 21 backlit, tri-color, momentary contact tactile buttons in 3 banks
- Jog knob interface
- USB interface to PC Motherboard
- Push Button Matrix Scanner, for 21 top panel buttons
- T-bar lever A/D interface
- SPI Port to LCD screen Controller
- LED driver interface
- Button LED Dimming
- Embedded Program Flash and SRAM memory
- Display Interface
- LCD screen controller

Refer to “Type II control panel UI board removal” on page 74 for procedures.

Type II Encoder

This unit provides the jog knob functionality for the Dyno controller:

Refer to “Type II encoder removal” on page 76 for procedures.

LCD screen

The LCD touch screen is a 178mm (7in.) color flat panel display overlaid with a touch screen that translates finger contact into mouse-type USB control information. The display is a 800 x 480 resolution, 18 Bit Panel.

Refer to “LCD screen removal” on page 77 for procedures.

LCD screen inverter board

This board takes in a DC voltage and outputs a very high AC voltage to power the display backlight. It is mounted on the rear of the LCD touch screen housing.

Refer to “LCD screen inverter board removal” on page 71 for procedures.

Front I/O board

The front I/O connector board provides a headphone jack and volume control for audio monitoring, two front panel USB 2.0 ports, and a speaker (left channel). When the headphone jack is active, it mutes the speaker.

Refer to “Front I/O board removal” on page 78 for procedures.

Fan

The fan provides cooling for the Dyno controller chassis. The fan is installed in the rear of the Dyno controller chassis and it is temperature controlled.

Refer to “Fan removal” on page 79 for procedures.

USB board

The USB board provides the USB connections on the rear panel. It features a four port USB 2.0 Hub, ATX power management, and a rear fan control.

Refer to “USB board removal” on page 83 for procedures.

Motherboard

The motherboard hosts the CPU and other components that provide the basic computer functionality for the controller. It provides the Power and Service LEDs, a Compact Flash slot, and rear panel connectors as follows:

- 2 Giga-bit Ethernet
- 15 pin (D-conn) VGA
- DB-9 serial port.

Refer to “Motherboard removal” on page 80 for procedures.

Power supply

The Dyno controller power supply has a fan with automatic speed control. The power supply has protection for over voltage, over current, over temperature, and short circuits. It is an ATX Power supply of 180 Watts.

Refer to "Power supply removal" on page 84 for procedures.

Status indicators

The following sections describe the visual and audible indicators that communicate the current operating status and system health of the Dyno controller.

Rear panel indicators

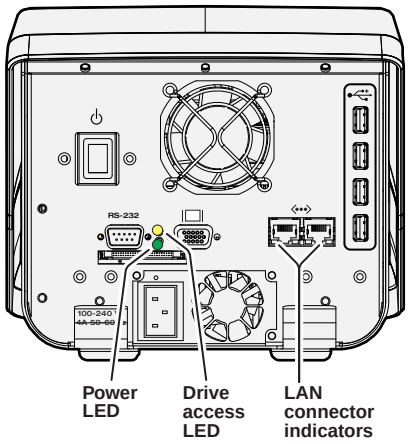

Power LED

This LED indicates status as follows:

Off: The standby switch is set to Off and the Dyno controller is not operational.

> ***WARNING: The power standby switch does not turn off power to the system. To turn power off the system must be disconnected from the power source.***

Steady on (green): The standby switch is set to On and the Dyno controller is either in the startup process or has competed the startup process and is operational.

Drive access LED

This LED indicates status as follows:

Flickering (amber): The system drive is being accessed by data read/write operations.

Off: No drive access is occurring.

LAN connector indicator codes

The motherboard has two RJ-45 LAN connectors that include integrated status LEDs. The LEDs are oriented as follows:

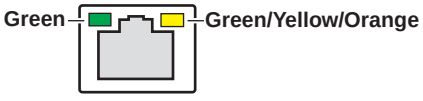

The meanings of the LED states are described in the following table:

LED	LED state	Status Condition
Green	Green On	The adapter is connected to a valid link partner
	Green flashing	Data activity
	Off	No link
Green/Yellow/ Orange	Off	10 Mbps
	Green	100 Mbps
	Yellow	10000 Mbps
	Orange flashing	Identify

If a LAN connector is faulty, you must replace the motherboard.

System beep codes

If there are no errors present the Dyno controller does not emit any audible beeps during startup process or otherwise. If an error occurs during Power On Self Test (POST), the BIOS might issue one of the following beep codes:

Error Beep Code	Description
One long and two short beeps	A video error has occurred and the BIOS cannot initialize the video screen to display any additional information.
A single long beep, repeated.	A DRAM error has occurred.

General specifications

Characteristic	Specification
Power	AC universal power supply, 100-130 VAC, 200-240 VAC, 50 or 60 Hz. Typical power consumption, 100 watts
Dimensions	Dimensions: length = 12.6 in. (316 mm); width = 8.25 in. (210 mm); height = 7.4 in.(187 mm) (All approx.)
Weight	5 kg (11 lbs.)
Temperature range	Operating: 0°C to 40°C (32°F to 104°F); Storage: -20°C to 60°C (-4°F to 140°F)
Humidity range	10% to 90% (relative humidity)

Counter top installation

Use the following specifications for a custom installation in a counter top.

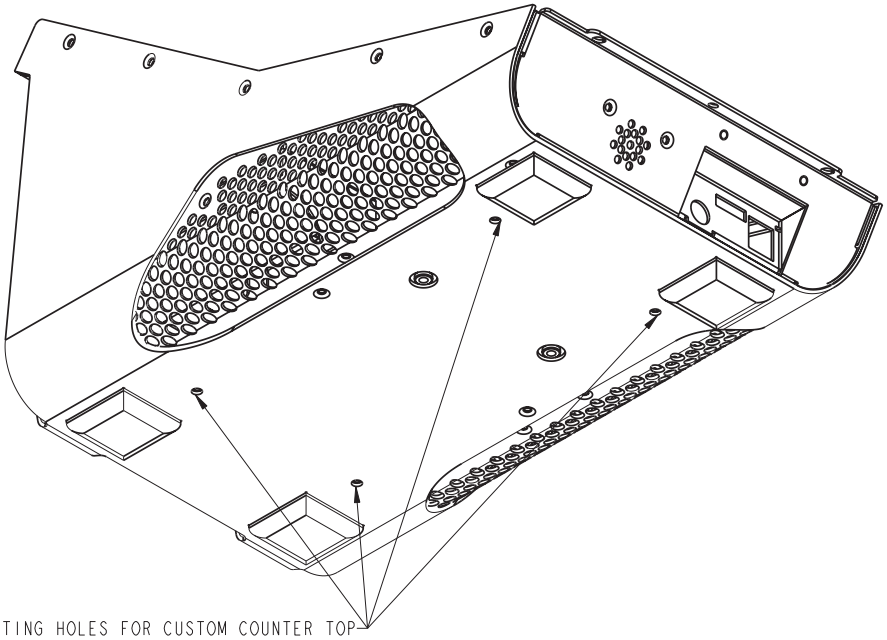

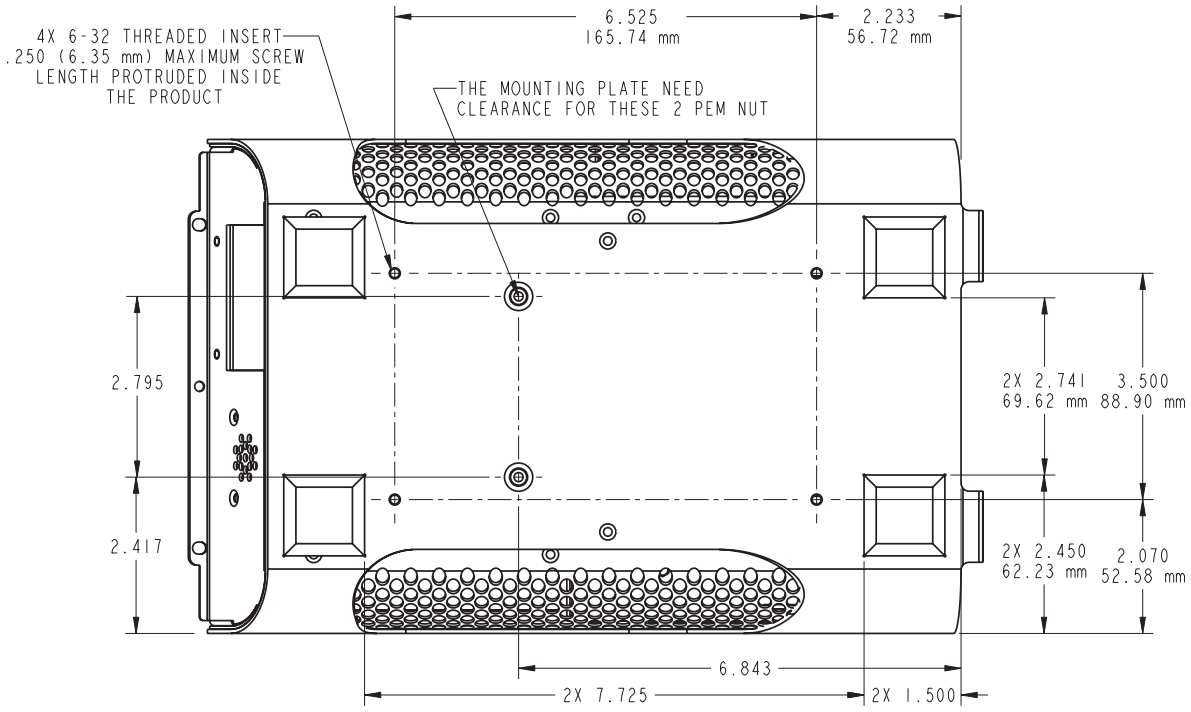

Chapter 2

Service Procedures

Topics in this section include the following:

- "Exporting log files (software version 2.x)" on page 37
- "Exporting log files (software version 1.x)" on page 37
- "Calibrating the control panel" on page 37
- "Upgrading software" on page 38
- "Updating firmware (software version 2.x)" on page 38
- "Updating firmware (software version 1.x)" on page 38
- "Using recovery disk images" on page 39
- "Replacing a Dyno controller" on page 44

Exporting log files (software version 2.x)

In version 2.x, the K2 Dyno Replay application no longer exports logs. Logs are stored on the K2 Summit Production Client or Solo.

Exporting log files (software version 1.x)

1. In the K2 Dyno Replay application on the K2 Dyno Replay Controller LCD screen, select the **CONFIG** tab.
2. Touch **<** or **>** and then select **LOG**.
3. Configure settings as follows:
   - Verbose Level — Sets the log output level. A more detailed log is output as you increase the value.
   - Output Folder — Specifies the folder to which the log is output.
   - Gathering From — Sets the source(s) from which a log is collected. If you select Local Only, a log for operations, only on the K2 Dyno Replay Controller that you are currently working on, is output. If you select Session, a log for operations on all the controllers is output even when multiple K2 Dyno Replay Controllers are connected.

Calibrating the control panel

You can adjust the LED brightness of the button and the idle of the T-Bar/JOG knob to suit your environment or preferences.

1. To start the diagnostics tool, double-click *ControllerDiag.exe.*
   - In software version 2.x, it is located in `c:/program files/Grass Valley/Dyno.`
   - In software version 1.x, it is located in `c:/program files/K2Dyno.` You

can also access the tool by pressing the **Shift**, **Fn**, and **Next** buttons at the same time.

The calibration screen appears on the LCD screen.

2. Set items as follows:

Touch this…	To make this adjustment:
TOUCH PANEL	Corrects the touch panel. Touching the panel displays cross-shapes at the upper left and lower right corners of the screen. Touch them to correct the touch panel, respectively.
LCD BRIGHT	Adjusts the screen brightness. Touch </> to adjust.
LED BRIGHT	Adjusts the button brightness. Touch </> to adjust.
T-BAR	Sets the idle of the T-Bar. Operate the T-Bar to move it to the position you want to set as 0%, and then touch “0%”. Similarly, touch “100%” at the position to set as “100%”
JOG	Sets the idle of the JOG knob. Touch </> to adjust. The idle becomes smaller as you decrease the value.
Load Default	Touch to restore the default settings.
Save & Exit	Saves the settings and exits the calibration screen.
Exit	Discards the settings and exits the calibration screen.

Upgrading software

When you receive your Dyno controller from Grass Valley, it has all necessary software installed. For procedures to upgrade software on the Dyno controller, refer to the *K2 Dyno Replay Controller Release Notes* for the version to which you are upgrading. Also refer to *K2 Release Notes* to upgrade related software on the K2 Summit Production Client.

Updating firmware (software version 2.x)

With software version 2.x or higher, firmware is automatically installed when the K2 Dyno software is installed. If a new board is installed, the K2 Dyno Replay Controller automatically updates the firmware.

When upgrading Dyno software from version 2.x or higher, the Dyno Replay Controller automatically checks for updated firmware and upgrades it along with the software.

Updating firmware (software version 1.x)

1. Copy the update file to a USB memory.
   - For instructions on how to obtain the update file, see the latest release notes.
2. Attach the USB memory to the K2 Dyno Replay Controller.
3. As soon as the K2 Dyno Replay Controller starts up, press the **Fn**, **Shift**, and **A** buttons at the same time.

- You can also start the firmware updater by double-clicking ControllerUpdater.exe in c:/program files/K2Dyno.

4. Click **Update**.

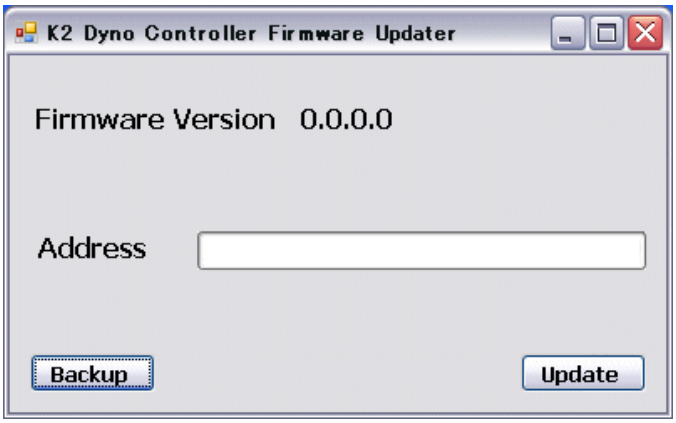

- If you click **Backup**, the current program is backed up to the folder where the program was installed.

5. Select the update file in the USB memory, and then click **Open**.

Using recovery disk images

Procedures in this section are as follows:

- "About the recovery disk image process" on page 39
- "Creating a recovery disk image" on page 40
- "Restoring from a system-specific recovery disk image" on page 41

About the recovery disk image process

You can create a disk image of the Dyno controller system drive and restore from the image. This simplifies the process of rebuilding a system in a disaster-recovery scenario.

NOTE: This process is not intended as a means to backup and restore media.

When you receive your Dyno controller new from the factory, you a receive a system-specific disk image for that particular Dyno controller. This factory image is stored on a bootable USB Recovery Flash Drive. Also on the Recovery Flash Drive is the Acronis True Image software necessary to create and restore a disk image.

After your Dyno controller is installed, configured, and running in your system environment, you should create new recovery disk images to capture settings changed from default. These "first birthday" images are the baseline recovery image for the Dyno controller in its life in your facility. There is enough disk space on the Recovery Flash Drive to store the first birthday image along with the factory image.

You should likewise create a new recovery disk image after completing any process that changes system software or data, such as a software upgrade. In this way you retain the ability to restore your Dyno controller to a recent "last known good" state.

NOTE: The recovery disk image process is an "off-line" process. Do not attempt this process while media access is underway.

The recovery disk image process that you should follow is summarized in the following steps.

At the Dyno controller first birthday…

1. Boot from the Recovery Flash Drive..
2. Create a recovery disk image for the Dyno controller.

At milestones, such as software upgrades…

1. Boot from the Recovery Flash Drive..
2. Create a recovery disk image for the Dyno controller.
3. Copy the disk image to another location, such as a network drive.

If you need to restore the Dyno controller…

1. Boot from the Recovery Flash Drive..
2. Read the disk image from the Recovery Flash Drive or from the location that you stored the disk image.

Use the following procedures to implement the recovery disk image process as necessary.

Creating a recovery disk image

Do the following at the local Dyno controller to create a disk image:

1. Make sure that media access is stopped.
2. If you have not already done so, connect keyboard, monitor, and mouse to the Dyno controller.
3. Insert the Recovery Flash Drive into a USB port and restart the machine.

   The machine boots from the Flash drive. The Acronis True Image program loads.
4. In the Acronis True Image main window, click **Backup**.

   The Create Backup Wizard opens.
5. On the Welcome page, click **Next**.

   The Partitions Selection page opens.
6. Select the **(C:)** partition and then click **Next**.

   If a "…choose full backup mode…" message appears, click **OK**.

   The Backup Archive Location page opens.
7. In the tree view select **Removable Drive (A:)** as the location to which you are writing the disk image.

8. Enter the name of the image file you are creating. Create the file name using the Dyno controller hostname and the date. Name the file with the .tib extension. For example, if the hostname is Dyno1, in the File name field you would have `E:\Dyno1_20091027.tib`. Click **Next**.

   The Select Backup Mode page opens.

9. Select **Create a new full backup archive**. Click **Next**.

   The Backup Creation Options page opens.

10. Do not change any settings on this page. Click **Next**.

    The Archive Comment page opens.

11. If desired, enter image comments, such as the date, time, and software versions contained on the image you are creating. Click **Next**.

    The "…ready to proceed…" page opens.

12. Verify that you are creating an image from the C: drive and writing to the A:\ drive. Click **Proceed**.

    If a "…insert next volume…" message appears, click **OK**.

    The Operation Progress page opens and displays progress.

13. When a "Backup archive creation has been successfully completed" message appears, click **OK**.

14. Click **Operations | Exit** to exit the Acronis True Image program.

    The Dyno controller restarts automatically.

15. Remove the Recovery Flash Drive while the Dyno controller is shutting down.

Restoring from a system-specific recovery disk image

Use this procedure to access an image created from a specific system and restore that image to the same specific system from which it was created. This can be the factory image stored on the bootable USB Recovery Flash Drive or an image you created to capture settings changed from default.

Before restoring from a recovery disk image, make sure that the Dyno controller has access to the image from which you are restoring. You can restore from an image on the Recovery Flash Drive, from a network connected drive, or from another connected USB drive.

1. Make sure that media access is stopped.

2. If you have not already done so, connect keyboard, monitor, and mouse to the Dyno controller.

3. Insert the Recovery Flash Drive in a USB port and restart the machine. If there is a problem restarting, hold the standby button down for eight seconds to force a hard shutdown. Then press the standby button again to startup.

   The machine boots from the Flash drive. The Acronis True Image program loads.

4. In the Acronis True Image main window, click **Recovery**.

   The Restore Data Wizard opens.

5. On the Welcome page, click **Next**.

   The Archive Selection page opens.

6. In the tree view do one of the following:

   - Expand the node for **Removable Drive (A:)**. This is the Recovery Flash Drive. Select the image file. The file for the image supplied by the Grass Valley factory is named with the serial number of the Dyno controller.
   - Navigate to the location of the image file from which you are restoring.

   An image file has a *.tib* file name extension.

7. Click **Next**:

   The Restoration Type Selection page opens.

8. Select **Restore disks or partitions** and then click **Next**.

   The Partition or Disk to Restore page opens.

9. Select **FAT32 (C:)** and then click **Next**.

   The Restored Partition Location page opens.

10. Select **FAT32 (C:)** and then click **Next**.

    The Restored Partition Type page opens.

11. Leave the selection at **Active** and then click **Next**.

    The Restored Partition File System page opens.

12. Select **FAT32** and then click **Next**.

    The Restored Partition Size page opens.

13. Leave settings at their defaults. The size reported in the upper pane is the size detected of the actual C: partition. This should be the same as that reported in the Partition size field in the middle of the page. Free space before and Free space after should both be reported at 0 bytes. Click **Next**.

    The Next Selection page opens.

14. Select **No, I do not** and then click **Next**.

    The Restoration Options page opens.

15. Do not change any settings on this page. Click **Next**.

16. Click **Proceed**.

    The Operation Progress page opens and displays progress.

17. When a “The data was successfully restored” message appears, click **OK**.

18. Click **Operations | Exit** to exit the Acronis True Image program.

    The Dyno controller restarts automatically.

19. Remove the Recovery Flash Drive while the Dyno controller is shutting down.

Restoring from a generic recovery disk image

Use this procedure to restore from a generic baseline image that does not apply to any specific system. Use this procedure only as directed by release notes or by Grass Valley support.

Before restoring from a recovery disk image, make sure that the Dyno controller has access to the image from which you are restoring. You can restore from an image on a network connected drive or from a connected USB drive.

1. Make sure that media access is stopped.
2. If you have not already done so, connect keyboard, monitor, and mouse to the Dyno controller.
3. Insert the Recovery Flash Drive in a USB port and restart the machine. If there is a problem restarting, hold the standby button down for eight seconds to force a hard shutdown. Then press the standby button again to startup.

   The machine boots from the Flash drive. The Acronis True Image program loads.
4. In the Acronis True Image main window, click **Recovery**.

   The Restore Data Wizard opens.
5. On the Welcome page, click **Next**.

   The Archive Selection page opens.
6. In the tree view do the following:

   - Navigate to the location of the image file from which you are restoring.

   An image file has a *.tib* file name extension.
7. Click **Next**:

   The Restoration Type Selection page opens.
8. Select **Restore disks or partitions** and then click **Next**.

   The Partition or Disk to Restore page opens.
9. Select **FAT32 (C:)** and then click **Next**.

   The Restored Partition Location page opens.
10. Select **FAT32 (C:)** and then click **Next**.

    The Restored Partition Type page opens.
11. Leave the selection at **Active** and then click **Next**.

    The Restored Partition File System page opens.
12. Select **FAT32** and then click **Next**.

    The Restored Partition Size page opens.
13. Leave settings at their defaults. The size reported in the upper pane is the size detected of the actual C: partition. This should be the same as that reported in the Partition size field in the middle of the page. Free space before and Free space after should both be reported at 0 bytes. Click **Next**.

    The Next Selection page opens.

14. Select **No, I do not** and then click **Next**.

    The Restoration Options page opens.

15. Do not change any settings on this page. Click **Next**.
16. Click **Proceed**.

    The Operation Progress page opens and displays progress.

17. When a "The data was successfully restored" message appears, click **OK**.
18. Click **Operations | Exit** to exit the Acronis True Image program.

    The Dyno controller restarts automatically.

19. Remove the Recovery Flash Drive while the Dyno controller is shutting down.
20. When restart completes, run *C:\WINDOWS\NewSid\NewSid*.
21. In the NewSid wizard, do the following:
    a. Click **Agree**.
    b. Click **Next**.

       The Choose a SID page opens.

    c. Select **Random SID** and clique **Next**.

       The Rename the Computer page opens.

    d. Select the **Rename the Computer** checkbox and enter the serial number of the K2 Dyno Replay Controller. Then click **Next**.
    e. Click **Next** to complete the wizard.
    f. Restart as prompted.
22. When restart completes, set network settings as follows:
    a. For the loopback adapter, verify that the following:
       - IP address: 192.168.200.200
       - Subnet mask: 255.255.255.0

    b. Set NIC names as follows:
       - Set rear panel Ethernet port 1 to *GB1*
       - Set rear panel Ethernet port 2 to *GB2*

23. Install Dyno Client software as instructed in release notes.

    When installing software, if prompted to enter the serial number, leave the serial number field blank. Do not enter the serial number.

Replacing a Dyno controller

To correct some system faults Grass Valley Support sends you a replacement Dyno controller. Contact Grass Valley Support if you think you need a replacement Dyno controller.

Chapter 3

Troubleshooting problems

If you think there is something wrong (broken) with your K2 Dyno Replay Controller, go through the following preliminary steps:

- "Step 1: Check configurations" on page 48
- "Step 2: Check connections and external equipment" on page 48
- "Step 3: Identify problems using the startup sequence" on page 48
- "Step 4: Run hardware diagnostics" on page 48

Then use the following topics to troubleshoot specific problem areas:

- "BIOS startup information" on page 51
- "Shutdown/restart problems" on page 51
- "Checking external equipment" on page 52
- "BIOS startup" on page 52
- "BIOS POST error messages" on page 52
- "Windows startup" on page 56
- "LCD screen problems" on page 57
- "Thermal problems" on page 57
- "Power supply problems" on page 57
- "Isolating functional problems" on page 58

Step 1: Check configurations

Many times what appears to be a Dyno controller fault is actually an easy-to-fix configuration problem. Check settings in the K2 Summit Production Client Configuration Manager and the Dyno Replay application Config tab and verify that the system is configured as you expect.

Step 2: Check connections and external equipment

Loose or improperly connected cables are the most likely source of problems for the system. A quick check of all the cable connections can easily solve these problems. Refer to the troubleshooting topic "Checking external equipment" on page 52 if you suspect a failure in a connected device.

Step 3: Identify problems using the startup sequence

The startup sequence is a primary tool for identifying a Dyno controller fault. As the different levels of the Dyno controller system become operational in the startup process, the primary components of the system are checked. You can identify most problems by evaluating the messages and other indicators that occur during the startup sequence.

To identify problems using the startup sequence, do the following:

1. Connect mouse, keyboard, and monitor. You must observe the VGA screen and be able to interact with the system via keyboard and mouse to fully identify problems.
2. Restart the Dyno controller. If you have problems, refer to "Shutdown/restart problems" on page 51.
3. Once the startup sequence begins, observe the progression of behaviors. If you observe error behaviors, refer to the indicated troubleshooting topics to identify problems.

NOTE: You can press the Pause/Break key on the keyboard to keep BIOS text on the screen for longer viewing.

Step 4: Run hardware diagnostics

Select the hardware diagnostics procedure for your K2 Dyno software version:

- "Run hardware diagnostics (software version 2.x)" on page 48
- "Run hardware diagnostics (software version 1.x)" on page 50

Run hardware diagnostics (software version 2.x)

To run the hardware diagnostics, you need to start up the K2 Dyno Replay Controller in Maintenance mode. With the Dyno controller diagnostics, you can check if the hardware is operating normally as to whether:

- the buttons are illuminated in corresponding colors
- the button brightness can be changed

- the T-Bar position information is correct
- the hardware responds to the JOG operations properly

NOTE: In version 2.x, the jog knob is no longer based on speed. Instead, it is based on the position. For example, if you turn the knob one revolution, then go back one revolution, you are back at the original location.

- the touch panel detects correct positions
- the touch panel brightness can be changed

1. While in a regular Dyno software session, touch **Config | Exit** and select the option for Maintenance mode.

   The Windows desktop displays.

2. To start the diagnostics tool, double-click *ControllerDiag.exe* in `c:/program files/Grass Valley/Dyno`

   The Diagnostics screen appears.

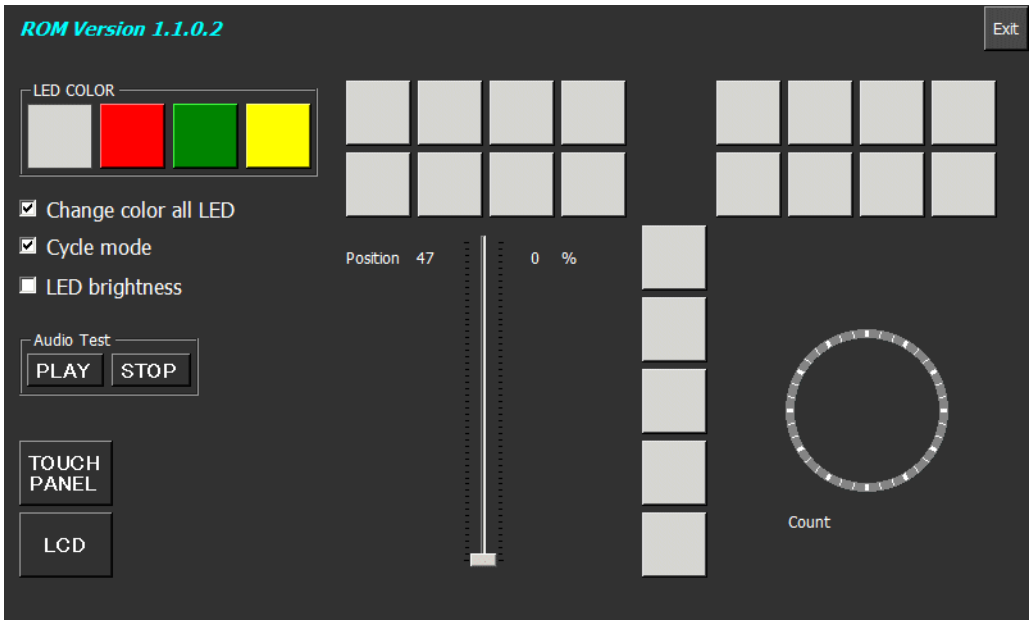

3. Perform hardware operation checks.

NOTE: Any changes made in the diagnostics, such as button brightness changes, will be disabled when you exit the diagnostics.Changes, such as brightness changes and lever position adjustments, must be made in a calibration.

4. When finished, click the **Exit** button at the upper right side.
5. When you exit the diagnostics, you are returned to the Windows desktop. To re-start the Dyno software, click on the Dyno icon on the desktop.

Run hardware diagnostics (software version 1.x)

With the Dyno controller diagnostics, you can check if the hardware is operating normally as to whether:

- the buttons are illuminated in corresponding colors
- the button brightness can be changed
- the T-Bar position information is correct
- the hardware responds to the JOG operations properly
- the touch panel detects correct positions
- the touch panel brightness can be changed

1. Start up the K2 Dyno Replay Controller.
2. When the Select Session Mode screen appears, press the **Fn**, **Shift**, and **AddPL** buttons at the same time.

   The Diagnostics screen appears.

   - You can also start the diagnostics by double-clicking ControllerDiag.exe in `c:/program files/K2Dyno`.

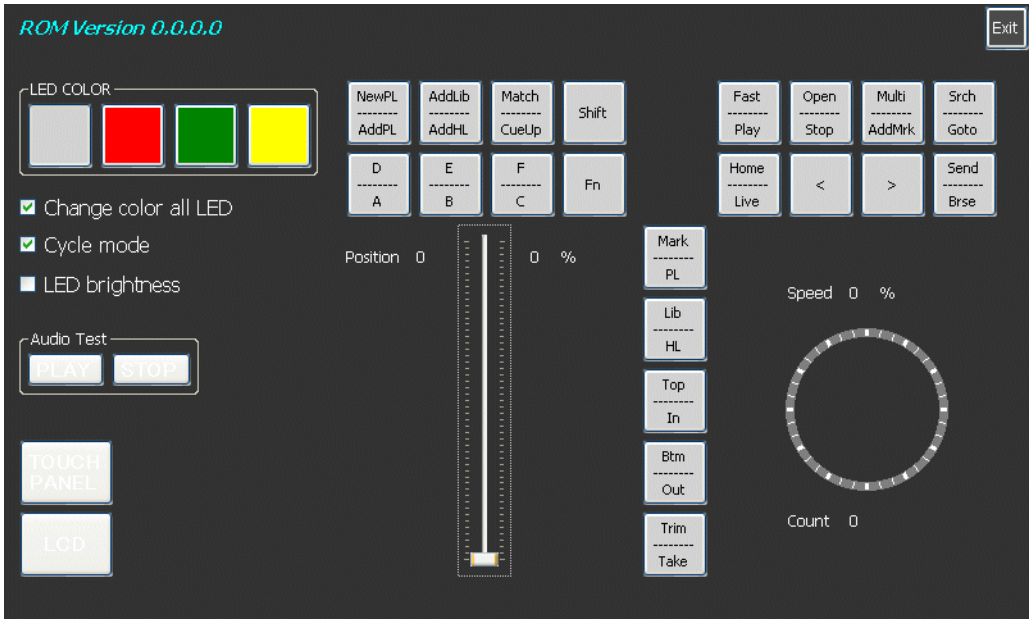

3. Perform hardware operation checks.

NOTE: Any changes made in the diagnostics, such as button brightness changes, will be disabled when you exit the diagnostics.Changes, such as brightness changes and lever position adjustments, must be made in a calibration.

4. When finished, click the **Exit** button at the upper right side.

When you exit the diagnostics, both the software and hardware is shut down, and the K2 Dyno Replay Controller is turned off.

BIOS startup information

The following information appears during a normal startup of the Dyno controller. This is a part of the BIOS Power On Self Test (POST).

Information	Explanation
Phoenix-Award BIOS XX…	BIOS and firmware version information
Copyright…	Copyright information for the manufacturer of the motherboard.
ECM…	Motherboard model information
Memory Frequency…	Report of memory currently installed
IDE Channel…	Report of system drive

Information	Explanation
Pri Master/Slave Disk	Enumeration of system drive(s)
Sec Master/Slave Disk	
Display Type	Report of built-in display (LCD screen)
Serial Ports	Report of serial port. (Serial port not used on Dyno)
Parallel Ports	NA. No parallel ports present on Dyno.
DDRZ at Bank(s)	Report of slot location of memory
PCI Device listing…	Report of PCI devices built-in to motherboard

Shutdown/restart problems

If the Dyno controller is inoperable due to a software error it can affect the operation of the standby button. If pressing the standby button does not shut down the Dyno controller, press and hold the button for eight seconds. This forces the Dyno controller to execute a hard power down. If that doesn't work, disconnect the power cable.

Checking external equipment

This section provides troubleshooting procedures for external devices that connect to the Dyno controller. Before using these procedures, first check connections, as in "Step 2: Check connections and external equipment" on page 48.

VGA display problems

Problem	Possible Causes	Corrective Actions
Screen turns on, but nothing from Dyno controller is displayed	VGA connector or cable is faulty.	Replace VGA monitor.
	Dyno controller system settings have been tampered with.	Restore default settings by restoring the system drive image from a recent backup image.

Keyboard and mouse problems

The keyboard and mouse are detected during BIOS startup. There should be a very brief message displayed indicating detection of input devices connected to USB ports

Problem	Possible Causes	Corrective Actions
The Dyno controller does not respond correctly when one or more of the keys on the keyboard are pressed or the mouse is used.	The keyboard or mouse is faulty.	Replace the keyboard or mouse.
	Dyno controller system settings have been tampered with.	Restore default settings by restoring the system drive image from a recent backup image.

BIOS startup

A few seconds after startup, a screen is displayed with system information messages. This is the BIOS Power On Self Test (POST). When the BIOS POST completes the Windows operating system begins to load.

BIOS POST error messages

During the Power On Self-Test (POST), if the BIOS detects an error requiring your action, it will either sound a beep code or display a message. If a message is displayed, it will be accompanied by the following:

PRESS F1 TO CONTINUE, CTRL-ALT-ESC OR DEL TO ENTER SETUP

To correct problems of this nature, contact Grass Valley Support.

The following is a list of BIOS POST error messages.

BIOS Message	Description
CMOS BATTERY HAS FAILED	CMOS battery is no longer functional. It should be replaced.

BIOS Message	Description
CMOS CHECKSUM ERROR	Checksum of CMOS is incorrect. This can indicate that CMOS has become corrupt. This error may have been caused by a weak battery. Check the battery and replace if necessary.
DISK BOOT FAILURE, INSERT SYSTEM DISK AND PRESS ENTER	No boot device was found. This could mean that either a boot drive was not detected or the drive does not contain proper system boot files. Insert a system disk into Drive A: and press <Enter>. If you assumed the system would boot from the hard drive, make sure the controller is inserted correctly and all cables are properly attached. Also be sure the disk is formatted as a boot device. Then reboot the system.
DISKETTE DRIVES OR TYPES MISMATCH ERROR - RUN SETUP	Type of diskette drive installed in the system is different from the CMOS definition. Run Setup to reconfigure the drive type correctly.
DISPLAY SWITCH IS SET INCORRECTLY	Display switch on the motherboard can be set to either monochrome or color. This indicates the switch is set to a different setting than indicated in Setup. Determine which setting is correct, and then either turn off the system and change the jumper, or enter Setup and change the VIDEO selection.
DISPLAY TYPE HAS CHANGED SINCE LAST BOOT	Since last powering off the system, the display adapter has been changed. You must configure the system for the new display type.
EISA Configuration Checksum Error PLEASE RUN EISA CONFIGURATION UTILITY	The EISA non-volatile RAM checksum is incorrect or cannot correctly read the EISA slot. This can indicate either the EISA non-volatile memory has become corrupt or the slot has been configured incorrectly. Also be sure the card is installed firmly in the slot.
EISA Configuration Is Not Complete PLEASE RUN EISA CONFIGURATION UTILITY	The slot configuration information stored in the EISA non-volatile memory is incomplete. Note: When either of these errors appears, the system will boot in ISA mode, which allows you to run the EISA Configuration Utility.
ERROR ENCOUNTERED INITIALIZING HARD DRIVE	Hard drive cannot be initialized. Be sure the adapter is installed correctly and all cables are correctly and firmly attached. Also be sure the correct hard drive type is selected in Setup.
ERROR INITIALIZING HARD DISK CONTROLLER	Cannot initialize controller. Make sure the cord is correctly and firmly installed in the bus. Be sure the correct hard drive type is selected in Setup. Also check to see if any jumper needs to be set correctly on the hard drive.
FLOPPY DISK CNTRLR ERROR OR NO CNTRLR PRESENT	Cannot find or initialize the floppy drive controller. Make sure the controller is installed correctly and firmly. If there are no floppy drives installed, be sure the Diskette Drive selection in Setup is set to NONE.

BIOS Message	Description
Invalid EISA Configuration PLEASE RUN EISA CONFIGURATION UTILITY	The non-volatile memory containing EISA configuration information was programmed incorrectly or has become corrupt. Re-run EISA configuration utility to correctly program the memory. Note: When either of these errors appears, the system will boot in ISA mode, which allows you to run the EISA Configuration Utility.
KEYBOARD ERROR OR NO KEYBOARD PRESENT	Cannot initialize the keyboard. Make sure the keyboard is attached correctly and no keys are being pressed during the boot. If you are purposely configuring the system without a keyboard, set the error halt condition in Setup to HALT ON ALL, BUT KEYBOARD. This will cause the BIOS to ignore the missing keyboard and continue the boot.
Memory Address Error at ...	Indicates a memory address error at a specific location. You can use this location along with the memory map for your system to find and replace the bad memory chips.
Memory parity Error at ...	Indicates a memory parity error at a specific location. You can use this location along with the memory map for your system to find and replace the bad memory chips.
MEMORY SIZE HAS CHANGED SINCE LAST BOOT	Memory has been added or removed since the last boot. In EISA mode use Configuration Utility to reconfigure the memory configuration. In ISA mode enter Setup and enter the new memory size in the memory fields.
Memory Verify Error at ...	Indicates an error verifying a value already written to memory. Use the location along with your system's memory map to locate the bad chip.
OFFENDING ADDRESS NOT FOUND	This message is used in conjunction with the I/O CHANNEL CHECK and RAM PARITY ERROR messages when the segment that has caused the problem cannot be isolated.
OFFENDING SEGMENT:	This message is used in conjunction with the I/O CHANNEL CHECK and RAM PARITY ERROR messages when the segment that has caused the problem has been isolated.
PRESS A KEY TO REBOOT	This will be displayed at the bottom screen when an error occurs that requires you to reboot. Press any key and the system will reboot.
PRESS F1 TO DISABLE NMI, F2 TO REBOOT	When BIOS detects a Non-maskable Interrupt condition during boot, this will allow you to disable the NMI and continue to boot, or you can reboot the system with the NMI enabled.
RAM PARITY ERROR - CHECKING FOR SEGMENT ...	Indicates a parity error in Random Access Memory.

BIOS Message	Description
Should Be Empty But EISA Board Found PLEASE RUN EISA CONFIGURATION UTILITY	A valid board ID was found in a slot that was configured as having no board ID. Note: When either of these errors appears, the system will boot in ISA mode, which allows you to run the EISA Configuration Utility.
Should Have EISA Board But Not Found PLEASE RUN EISA CONFIGURATION UTILITY	The board installed is not responding to the ID request, or no board ID has been found in the indicated slot. Note: When either of these errors appears, the system will boot in ISA mode, which allows you to run the EISA Configuration Utility.
Slot Not Empty	Indicates that a slot designated as empty by the EISA Configuration Utility actually contains a board. Note: When either of these errors appears, the system will boot in ISA mode, which allows you to run the EISA Configuration Utility.
SYSTEM HALTED, (CTRL-ALT-DEL) TO REBOOT ...	Indicates the present boot attempt has been aborted and the system must be rebooted. Press and hold down the CTRL and ALT keys and press DEL.
Wrong Board In Slot PLEASE RUN EISA CONFIGURATION UTILITY	The board ID does not match the ID stored in the EISA non-volatile memory. Note: When either of these errors appears, the system will boot in ISA mode, which allows you to run the EISA Configuration Utility.
FLOPPY DISK(S) fail (80) Unable to reset floppy subsystem.	
FLOPPY DISK(S) fail (40) Floppy Type dismatch.	
Hard Disk(s) fail (80) HDD reset failed.	
Hard Disk(s) fail (40) HDD controller diagnostics failed.	
Hard Disk(s) fail (20) HDD initialization error.	
Hard Disk(s) fail (10) Unable to recalibrate fixed disk.	
Hard Disk(s) fail (08) Sector Verify failed.	
Keyboard is locked out - Unlock the key.	BIOS detect the keyboard is locked. P17 of keyboard controller is pulled low.
Keyboard error or no keyboard present.	Cannot initialize the keyboard. Make sure the keyboard is attached correctly and no keys are being pressed during the boot.
Manufacturing POST loop.	System will repeat POST procedure infinitely while the P15 of keyboard controller is pull low. This is also used for M/B burn in test.
BIOS ROM checksum error - System halted.	The checksum of ROM address F0000H-FFFFFH is bad.
Memory test fail.	BIOS reports the memory test fail if the onboard memory is tested error.

Windows startup

After the BIOS startup processes complete the Windows operating system starts up. Normally the Windows operating system completes its processes automatically without the need to press keys or respond to messages.

If the Windows startup screen does not proceed automatically or if a message appears that requires your input, it indicates a problem at the operating system level. If the problem cannot be corrected with a supported procedure (such as networking), the Windows operating system is not operating as it should. To correct problems of this nature, restore the system drive image. Refer to "Using recovery disk images" on page 39.

LCD screen problems

Problem	Possible Causes	Corrective Actions
Touching the screen does not select the control	The LCD screen needs calibration	On the K2 Dyno Controller control panel, press the Shift, Fn, and Goto buttons at the same time to access LCD screen calibration settings.
Screen turns on, but nothing from Dyno controller is displayed	VGA connector or cable is faulty.	Replace VGA monitor.
	Dyno controller system settings have been tampered with.	Restore default settings by restoring the system drive image from a recent backup image.

Thermal problems

Problem	Possible Causes	Corrective Actions
The fans are noisy or otherwise run erratically. The Dyno controller overheats. This can be accompanied by a message indicating a temperature or fan problem.	Airflow is blocked.	Ensure adequate airflow around the Dyno controller.
	A fan is not operating correctly.	Listen/look at the chassis fan and the power supply fan to verify proper operation. If the fans are not operating correctly, replace the fan or power supply.

Power supply problems

Problem	Possible Causes	Corrective Actions
The Dyno controller will not power on or power fails while the Dyno controller is in operation. This can be accompanied by a message indicating a power supply problem prior to the failure.	The power source is faulty.	Make sure your power source is reliable.
	The power cord is faulty.	Try another power cord.
	The Dyno controller is too hot. The built-in overtemperature protection can shut down the power supply.	Check for thermal problems. Cool the Dyno controller.
	The power supply is faulty. This is indicated if the front panel power indicator does not come on.	Replace the power supply

If the power source and the power cord are OK, replace the power supply.

Isolating functional problems

If you have a problem with a particular function but you are not sure of the source of a problem, do the following:

1. Verify that you can view functions on the following components. Connect or power up as appropriate:
   - The Dyno controller control panel (buttons, T-bar lever, jog know)
   - The Dyno controller LCD screen
   - The VGA monitor connected to the Dyno controller
   - The VGA monitor connected to the K2 Summit Production Client.
2. Compare functions between components. Determine if the problem appears on some components but not other components.
3. Use the following table to isolate the problem.

If the problem appears on these components…				**It indicates the cause and corrective actions are as follows:**
Control panel	**LCD screen**	**Dyno VGA**	**Summit VGA**	
x				Faulty control panel. Replace control panel UI board.
x	x			Faulty software. Reimage Dyno.
x	x	x		Faulty software or motherboard. Reimage Dyno. If problem remains, replace motherboard.
x	x	x	x	Faulty network connection or video/audio feed. Check network and video/audio source.
	x			Faulty software or LCD screen. Reimage Dyno. If problem remains, replace LCD screen
	x	x		Faulty software. Reimage Dyno.
	x	x	x	Faulty video/audio feed. Check video/audio source.
		x		Faulty VGA connection or monitor. Check connections and monitor.
			x	Summit problem. Check connections. Reimage Summit.

Chapter 4

Removing and replacing FRUs

Field Replaceable Units (FRUs) are modular hardware components that can be serviced without disturbing other components in the system. The following topics discuss working with the Dyno controller FRUs:

The pictures in these topics show how to disassemble. Unless otherwise documented, re-assembly is the reverse.

Unless otherwise indicated, you need only a Torx tool with T15 magnetic tip to remove and replace parts in the Dyno controller.

You can also replace the entire Dyno controller as a FRU, as explained in "Replacing a Dyno controller" on page 44.

NOTE: Only Grass Valley components are supported. Do not attempt to use components procured from a different source.

NOTE: Do not discard any hardware unless specifically instructed to do so.

⚠ ***WARNING: To avoid serious injury from high currents, ensure that the power cords are disconnected prior to removing or replacing any parts.***

⚠ ***CAUTION: This system contains board-level components that must be protected from static discharge and physical shock. Wear a wrist strap grounded through one of the system's ESD Ground jacks when handling system components.***

⚠ ***CAUTION: To avoid possible damage to circuit boards and other sensitive parts, turn off the Dyno controller and disconnect AC power before opening the top cover or removing any internal parts.***

Job knob removal

Remove the job knob as illustrated.

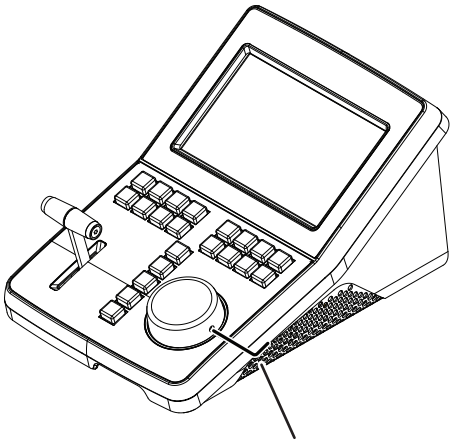

Control panel UI board identification

Before removing the jog knob bearing assembly or the control panel UI board, you must first determine if your Dyno Controller has a Type I or a Type II board. First remove the jog knob, then view the bearing to identify the board type, as illustrated.

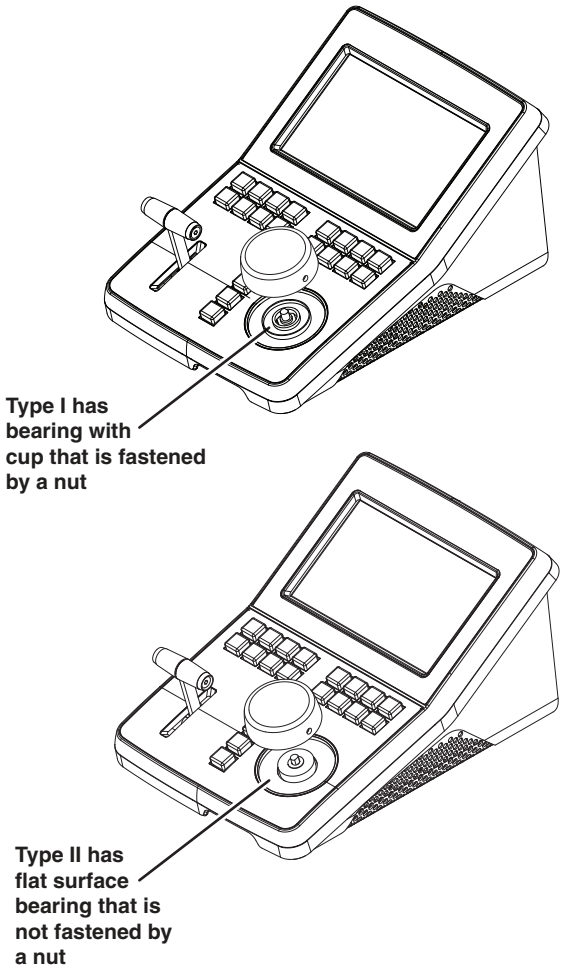

If your Dyno Controller has a Type II control panel UI board, it also has a Type II encoder.

Continue with the procedures as appropriate for the Type I or Type II components.

Job knob bearing assembly removal

If your K2 Dyno Controller has a Type I control panel UI board without the bearing kit installed, remove the bearing assembly under the jog knob as illustrated.

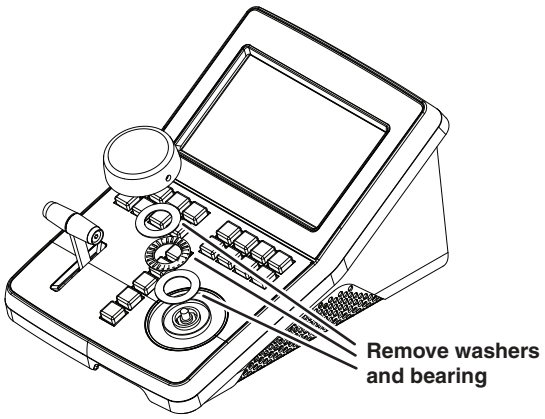

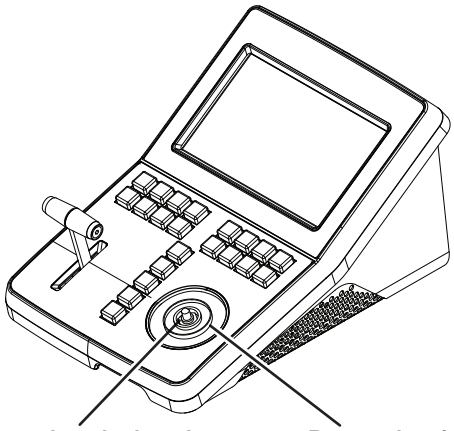

If your K2 Dyno Controller has a Type I control panel UI board with the bearing kit installed, remove the bearing assembly under the jog knob as illustrated.

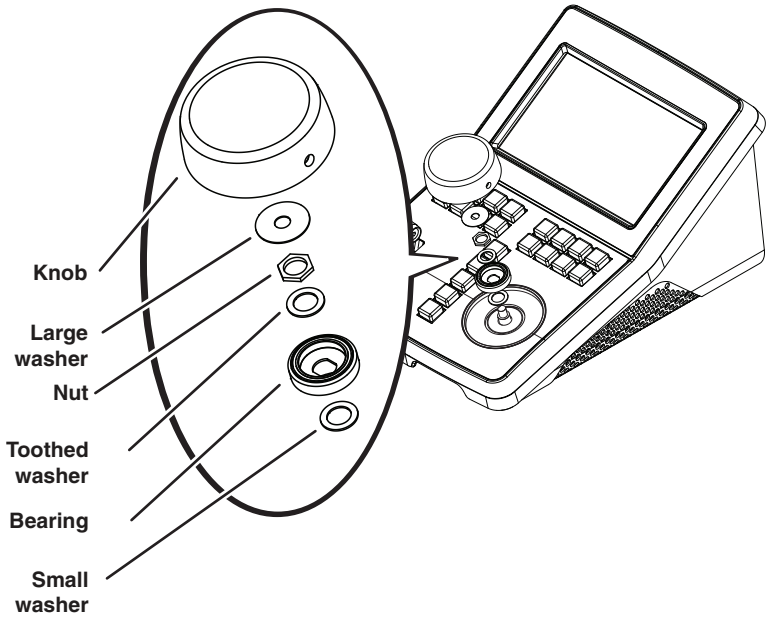

If your K2 Dyno Controller has a Type II control panel UI board and encoder, remove the bearing assembly under the jog knob as illustrated.

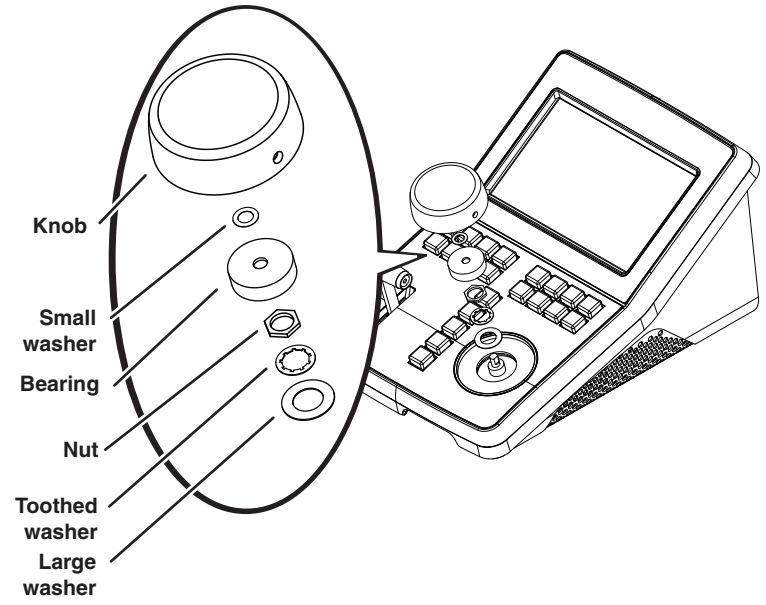

Job knob replacement

When replacing the job knob, replace washers and bearings, then align the knob as illustrated.

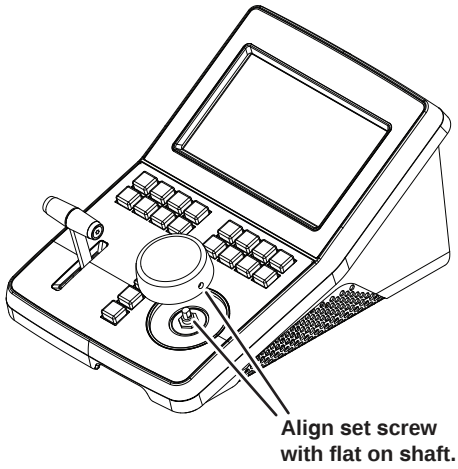

T-bar lever handle removal

Remove the T-bar lever handle as illustrated.

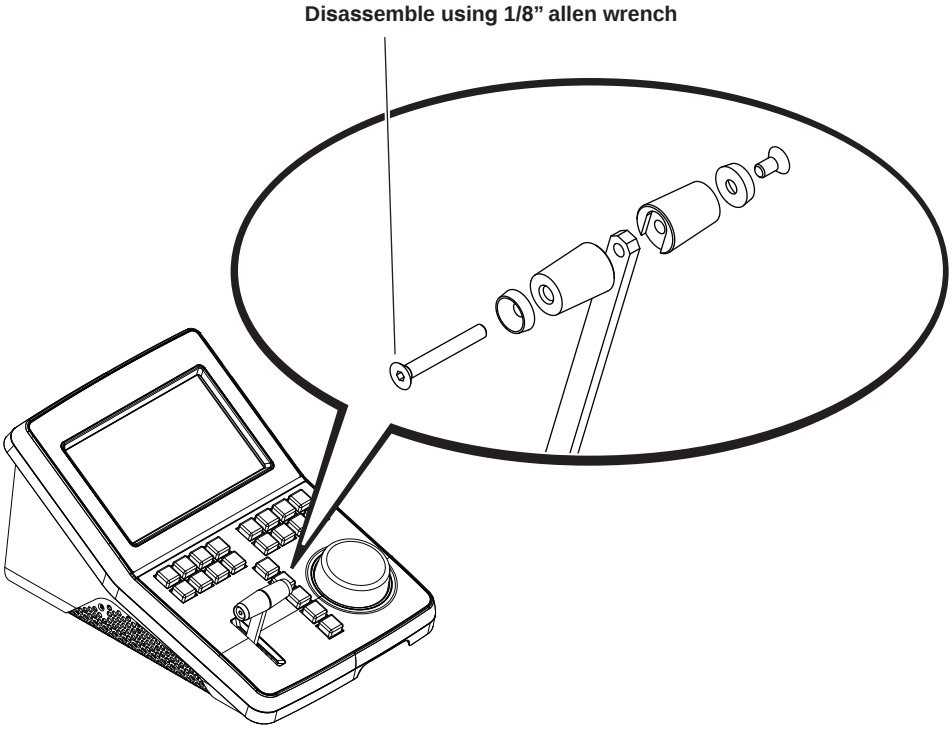

Compact Flash boot media removal

Remove the Compact Flash boot media from the rear panel, as illustrated.

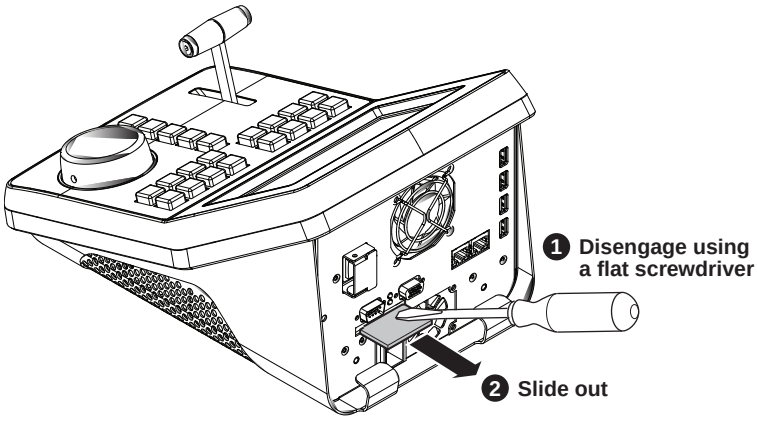

Top removal

To access the internal hardware, or if you are replacing the top unit as a pre-assembled FRU, remove the top as shown:

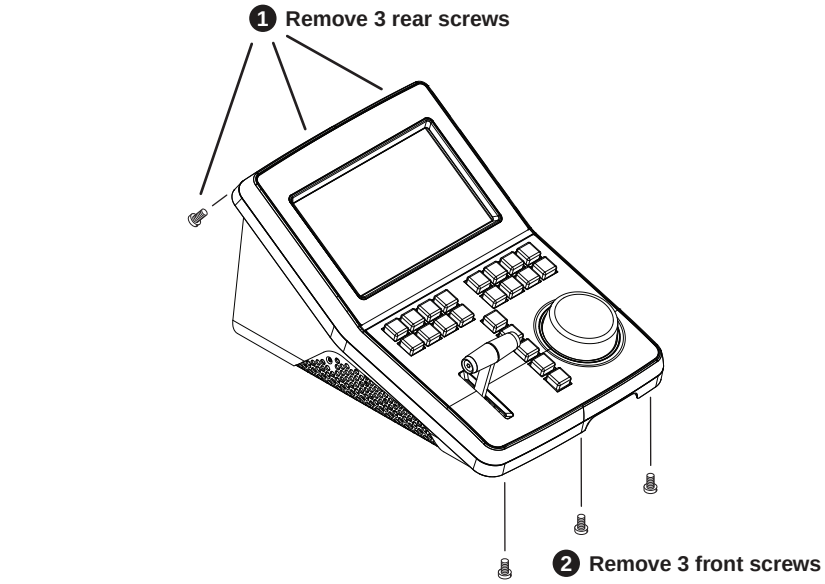

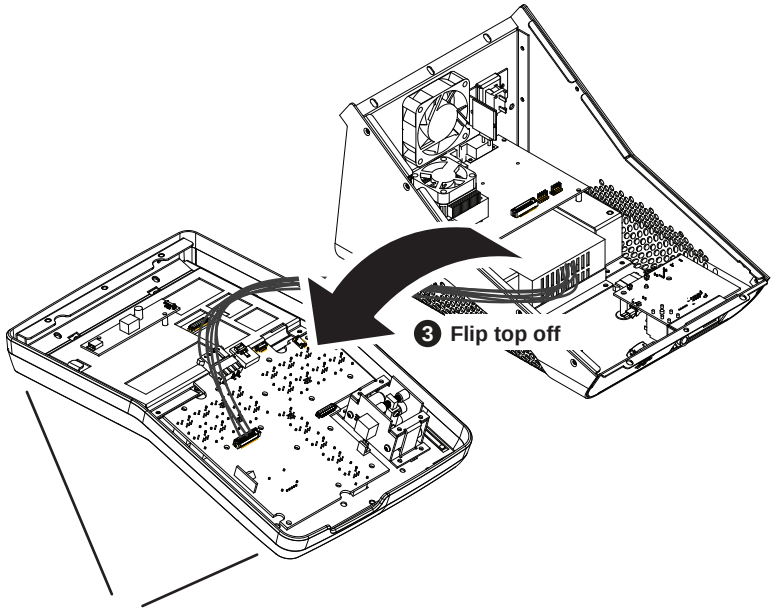

Top unit cable removal Type I control panel UI board

If your top unit has the Type I control panel UI board installed and you are replacing the top unit as a pre-assembled FRU, disconnect cables as shown.

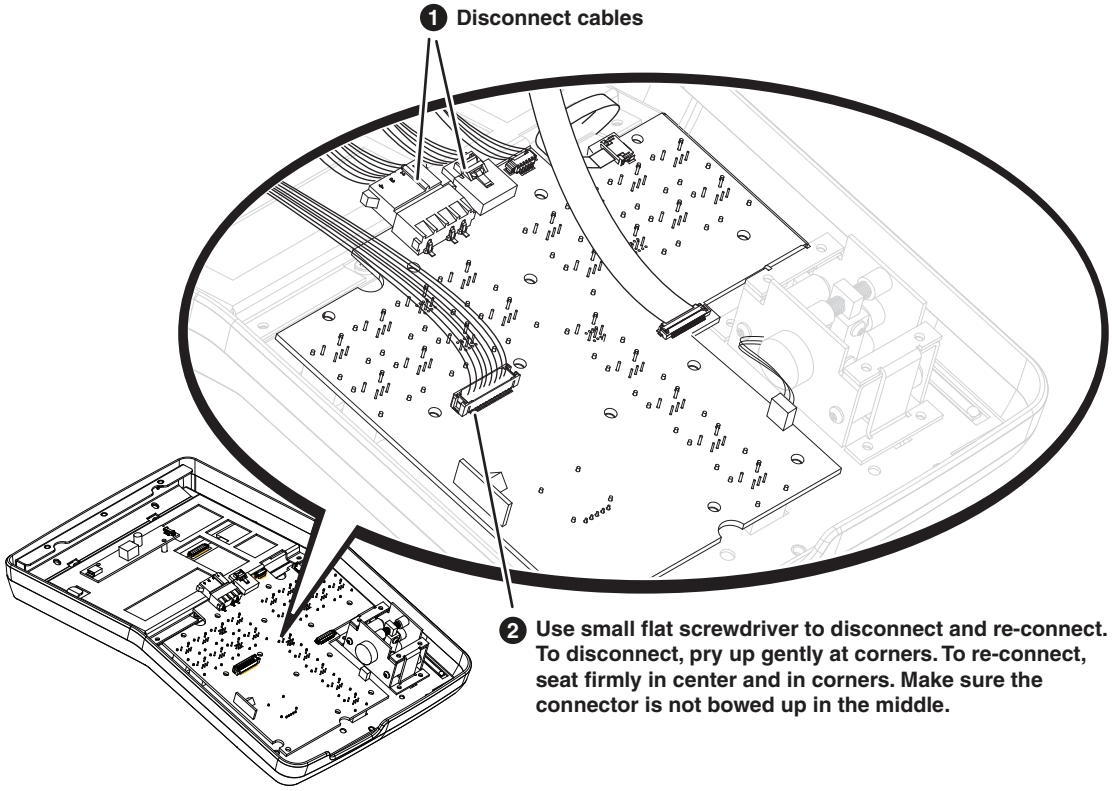

Top unit cable removal Type II control panel UI board

If your top unit has the Type II control panel UI board installed and you are replacing the top unit as a pre-assembled FRU, disconnect cables as shown.

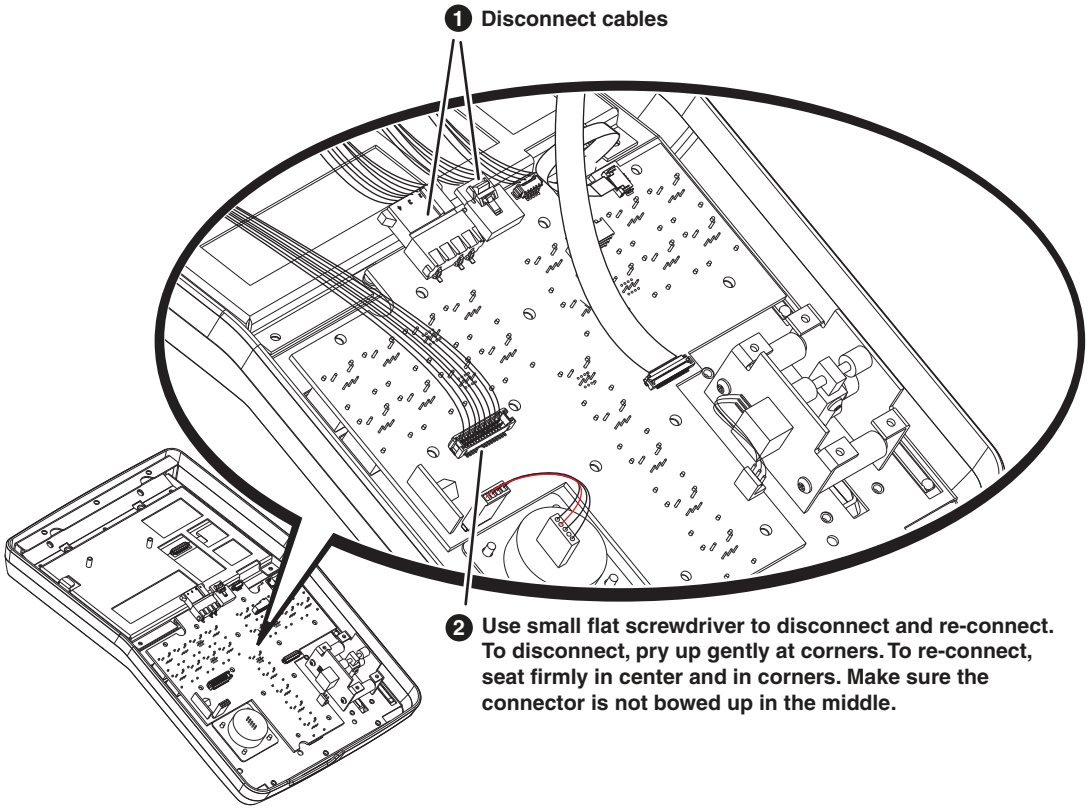

Top replacement

When replacing the top, install screws in sequence as shown:

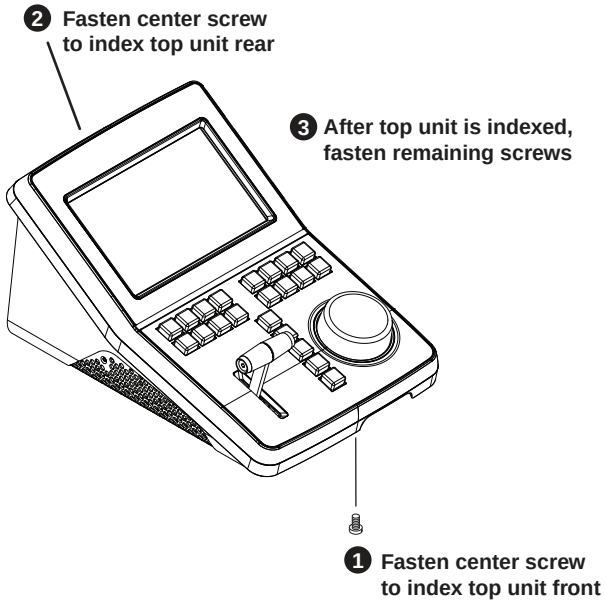

T-bar lever assembly removal

To remove the T-bar lever assembly, first remove the T-bar lever handle and the top, then work on the top unit separately, as illustrated.

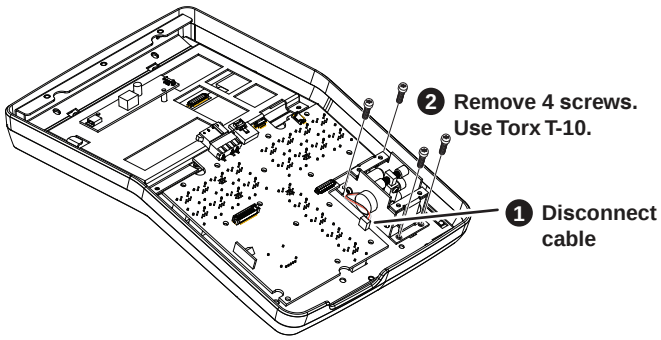

Plastic cover removal

To remove the plastic cover, first remove the jog knob, T-bar lever handle, and top, then work on the top unit separately, as illustrated.

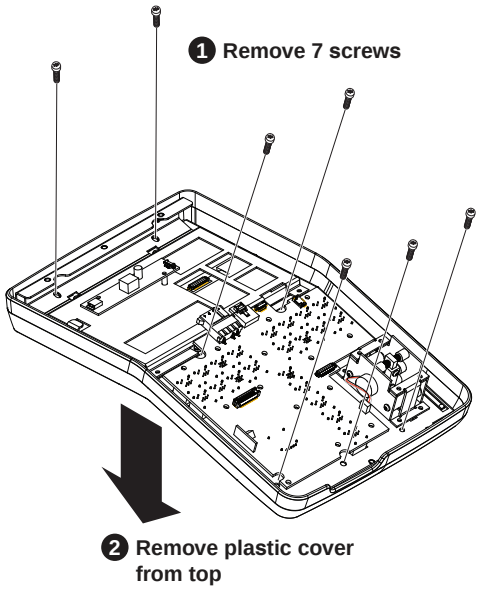

LCD screen inverter board removal

To remove the LCD screen inverter board, first remove the top, then work on the top unit separately, as illustrated.

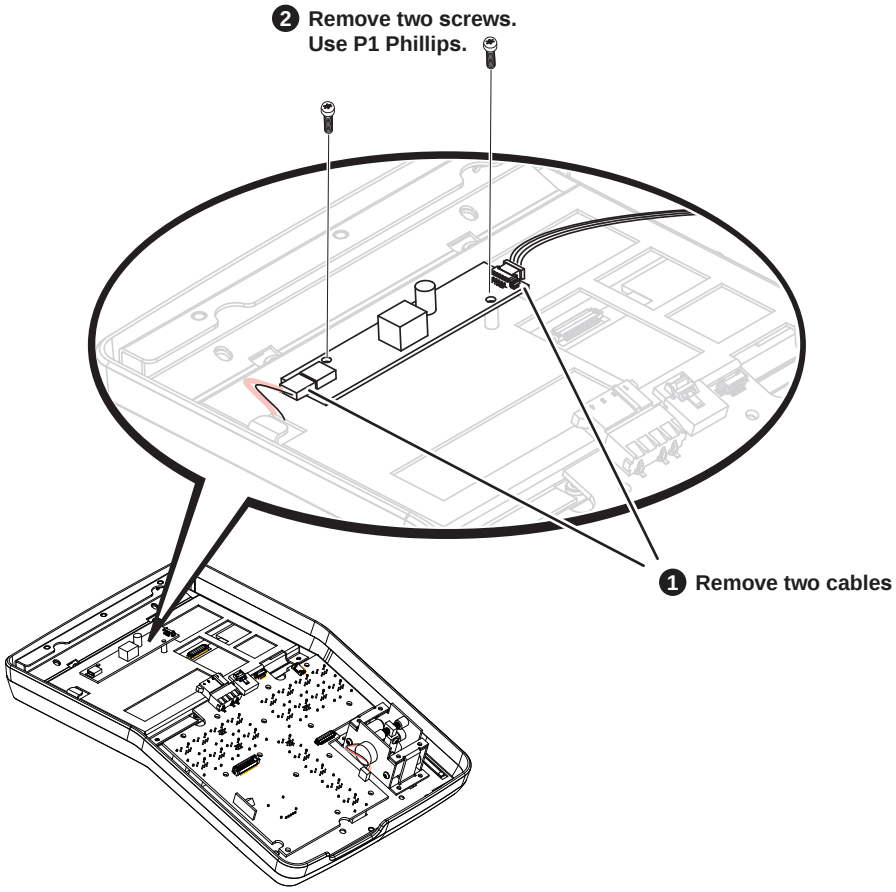

Type I control panel UI board removal

First remove the jog knob and identify your board type, as in "Control panel UI board identification" on page 61. To remove the Type I control panel UI board, continue by removing the bearing assembly and the top, then work on the top unit separately, as in the following illustrations.

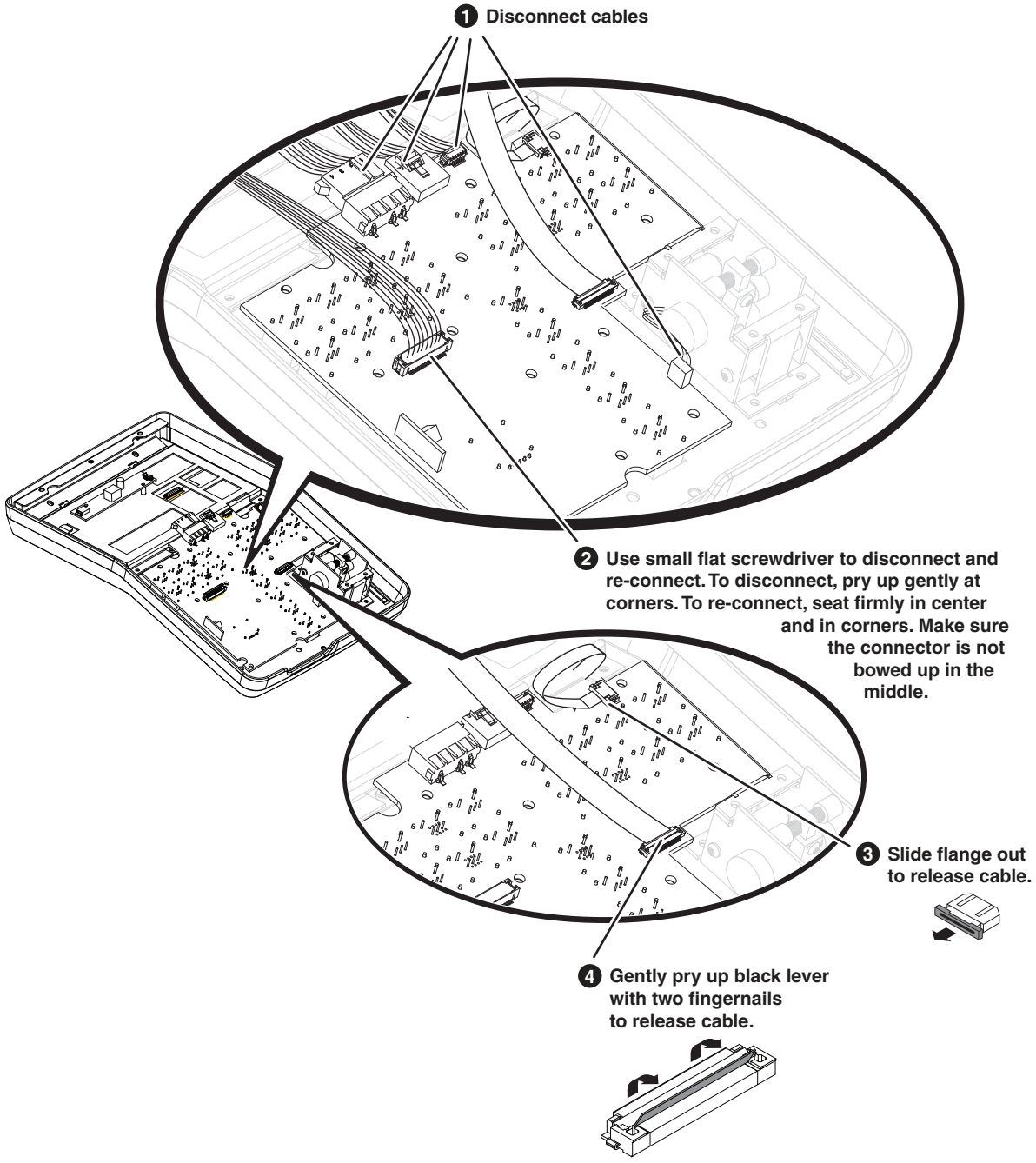

Continue with next illustration.

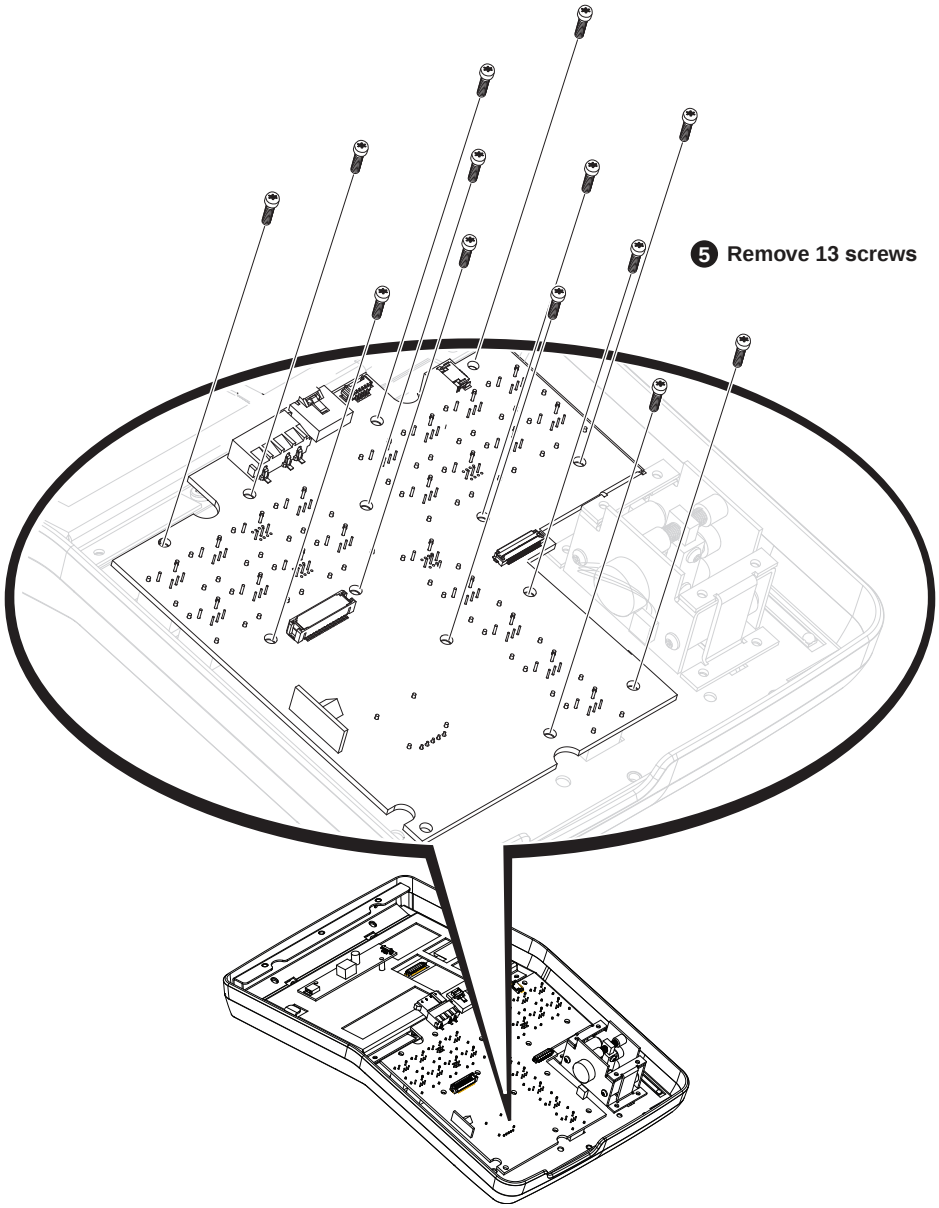
5 Remove 13 screws

Type II control panel UI board removal

First remove the jog knob and identify your board type, as in "Control panel UI board identification" on page 61. To remove the Type II control panel UI board, continue by removing the bearing assembly and the top, then work on the top unit separately, as in the following illustrations.

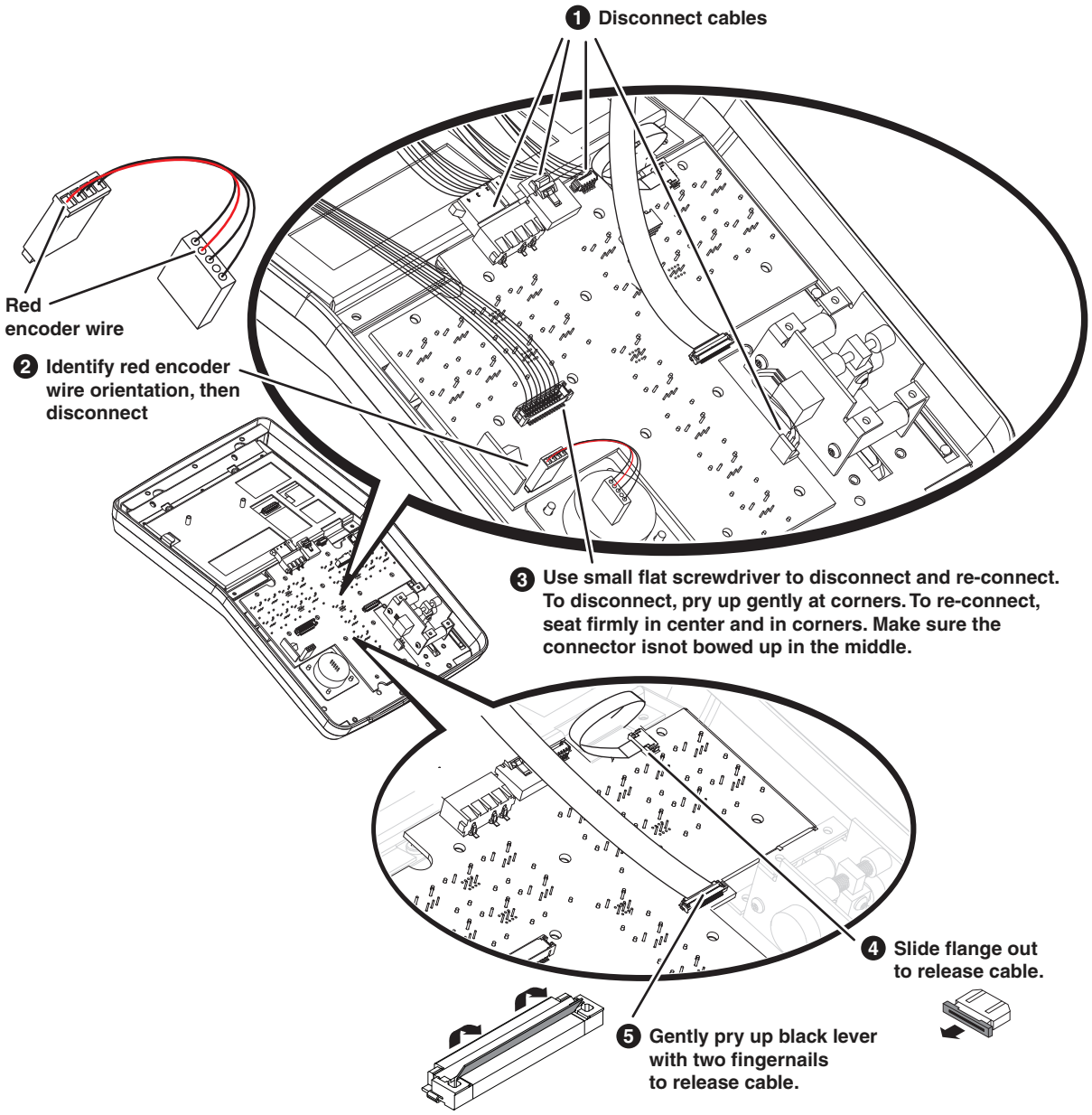

Continue with next illustration.

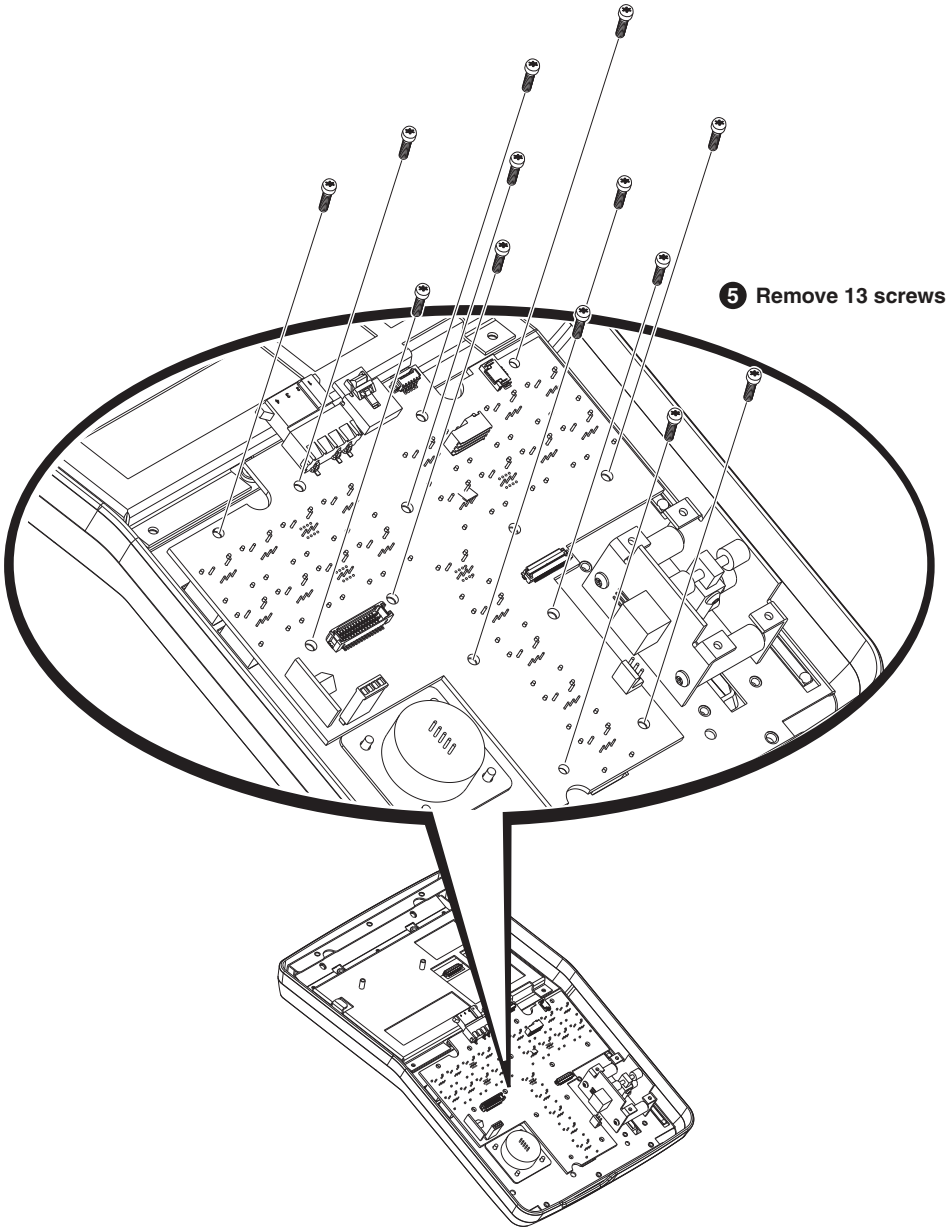
5 Remove 13 screws

Type II encoder removal

First remove the jog knob and identify your encoder and board type, as in “Control panel UI board identification” on page 61. To remove the Type II encoder, continue by removing the bearing assembly and the top, then work on the top unit separately, as in the following illustrations.

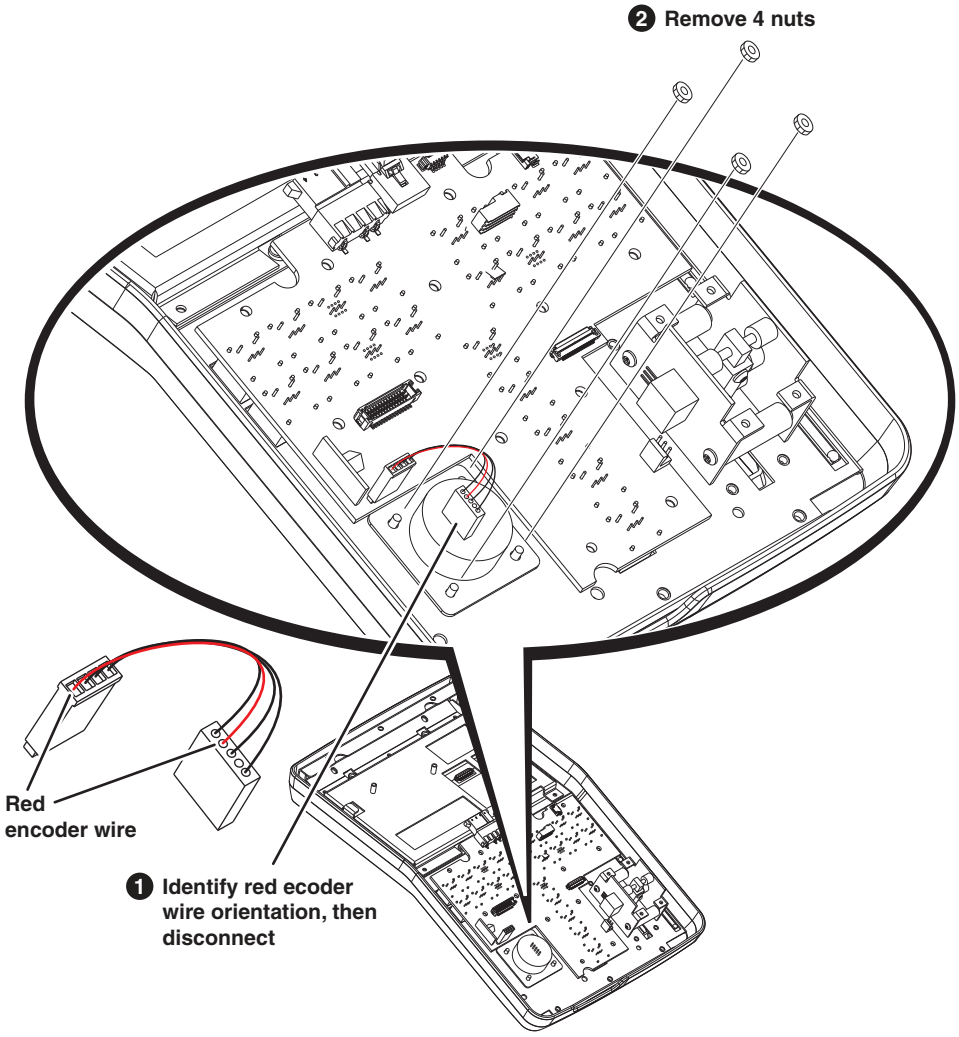

LCD screen removal

To remove the LCD screen, first remove the top and the plastic cover, then work on the top unit separately, as illustrated.

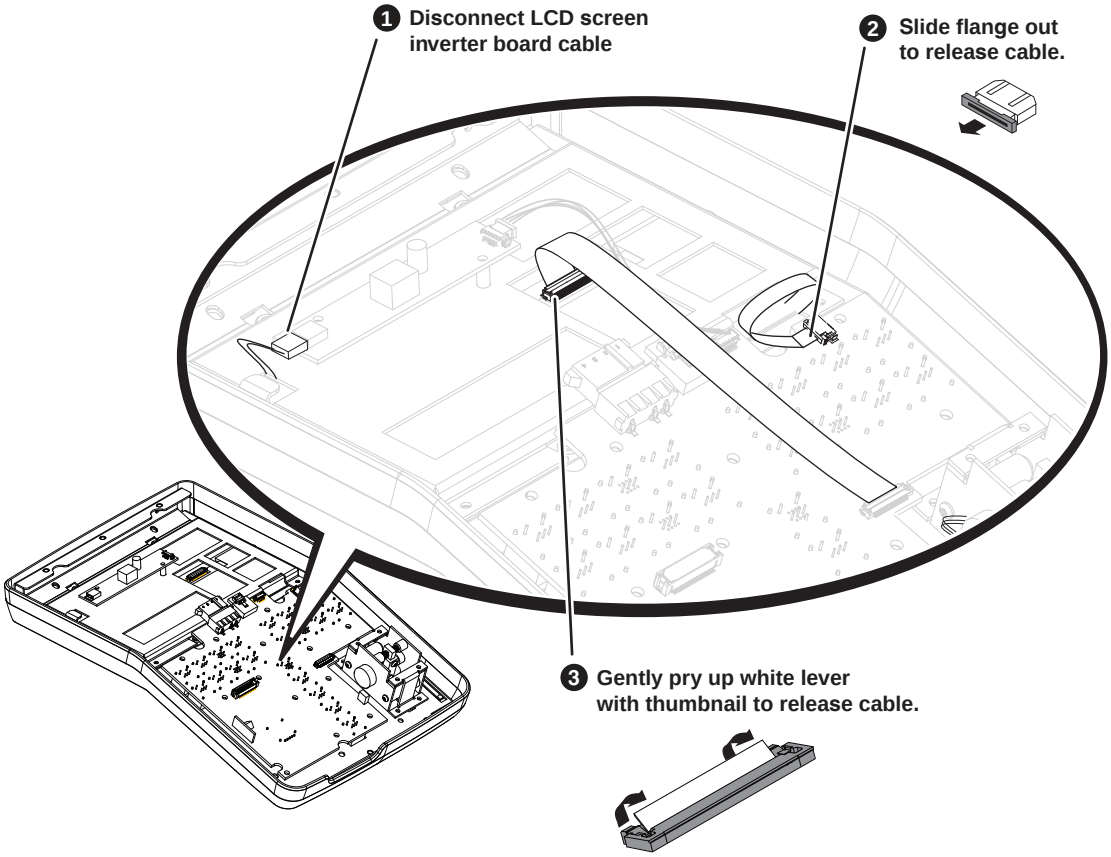

Continue with the next illustration.

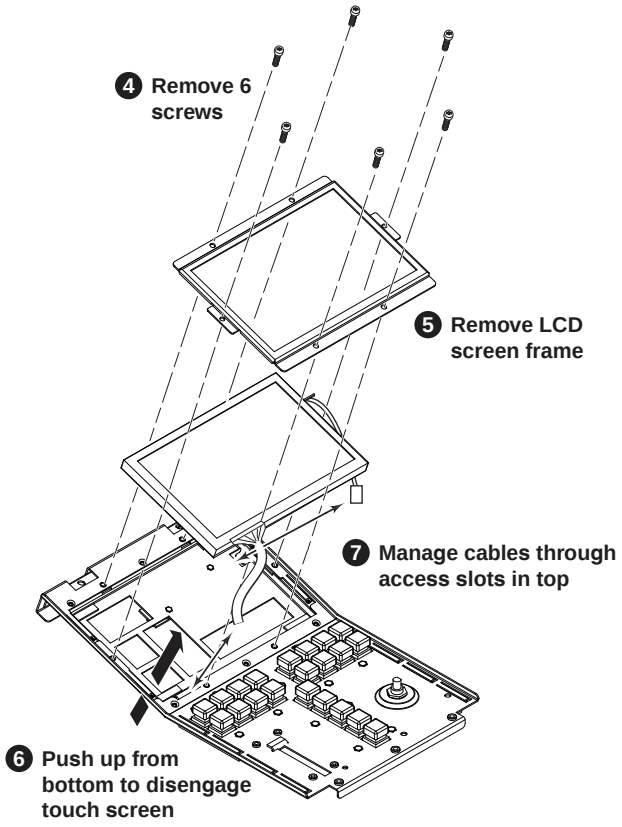

Front I/O board removal

To remove the front I/O board, first remove the top, then proceed as illustrated.

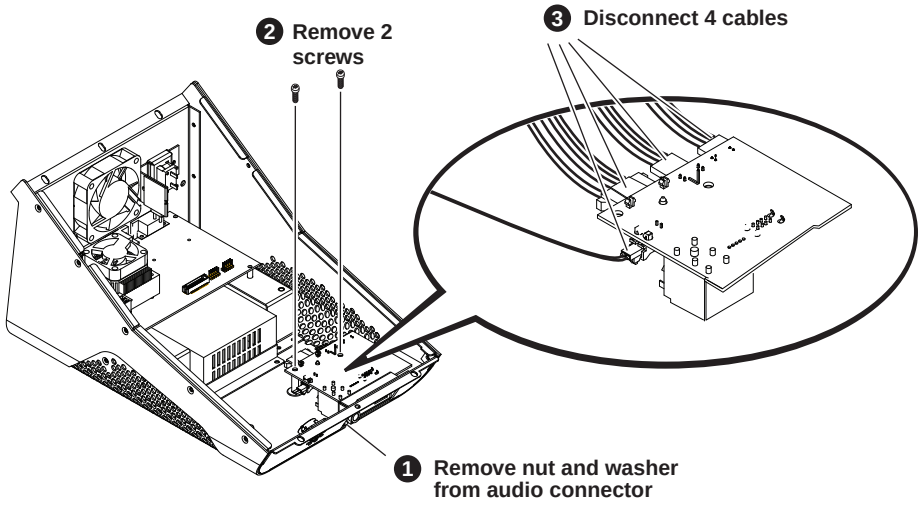

Fan removal

To remove the fan, first remove the top, then proceed as illustrated.

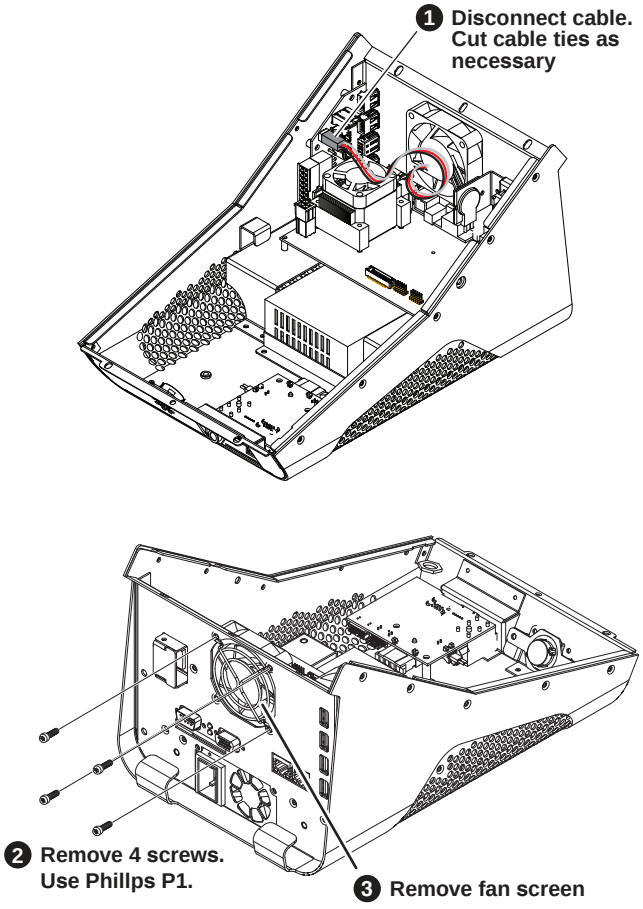

Motherboard removal

To remove the motherboard, first remove the top and the fan, then proceed as illustrated.

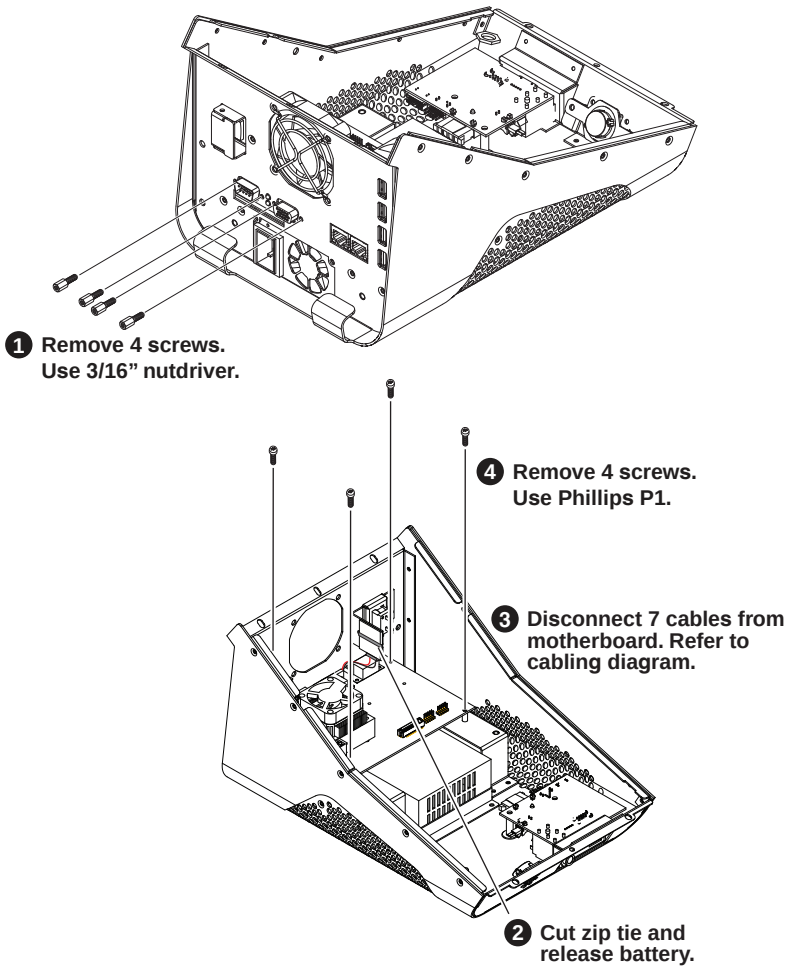

When installing the replacement motherboard, use the battery that comes with the replacement motherboard. Do not use the battery that was connected to the faulty motherboard.

Cabling diagram with Type I control panel UI board

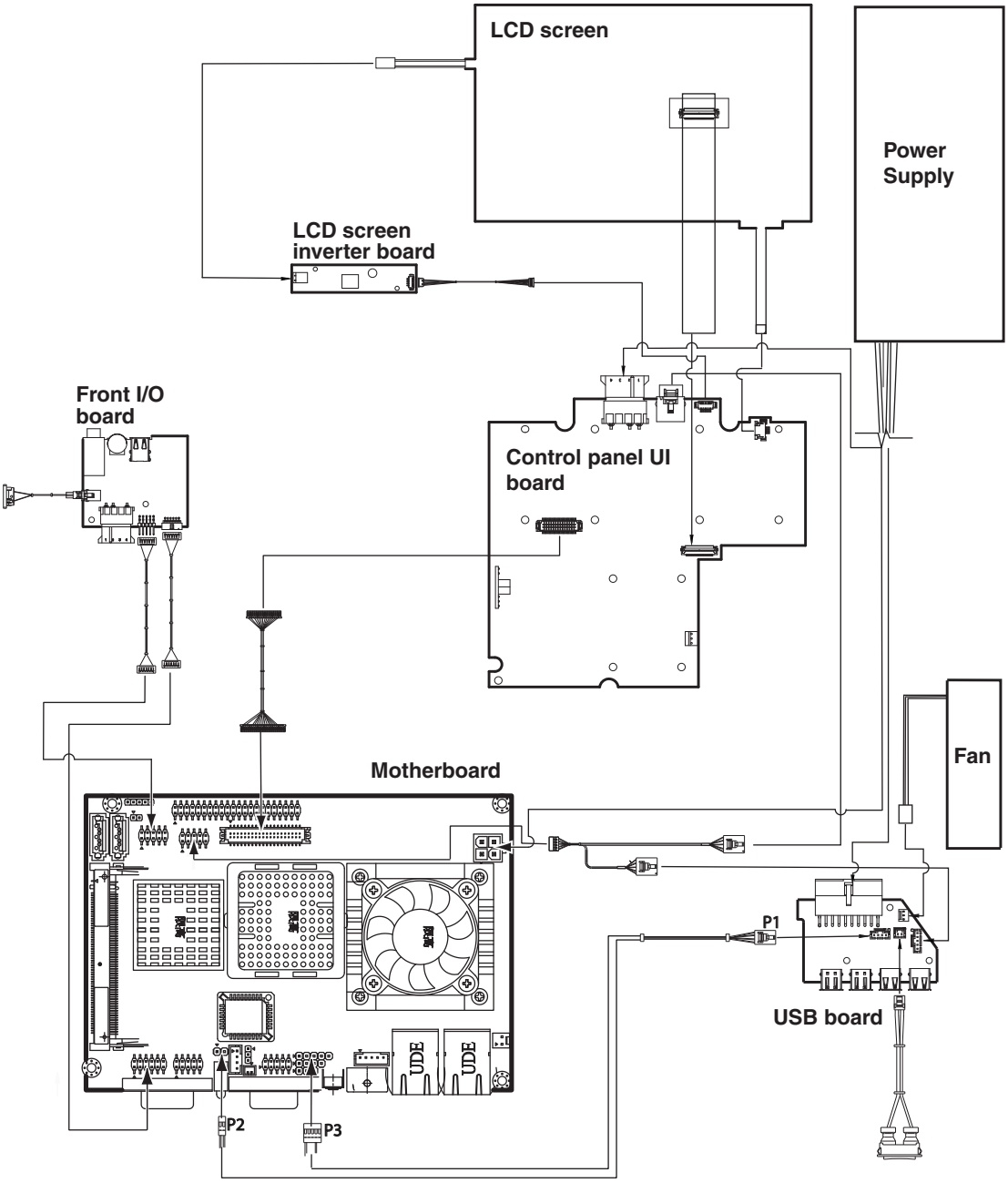

Cabling diagram with Type II control panel UI board

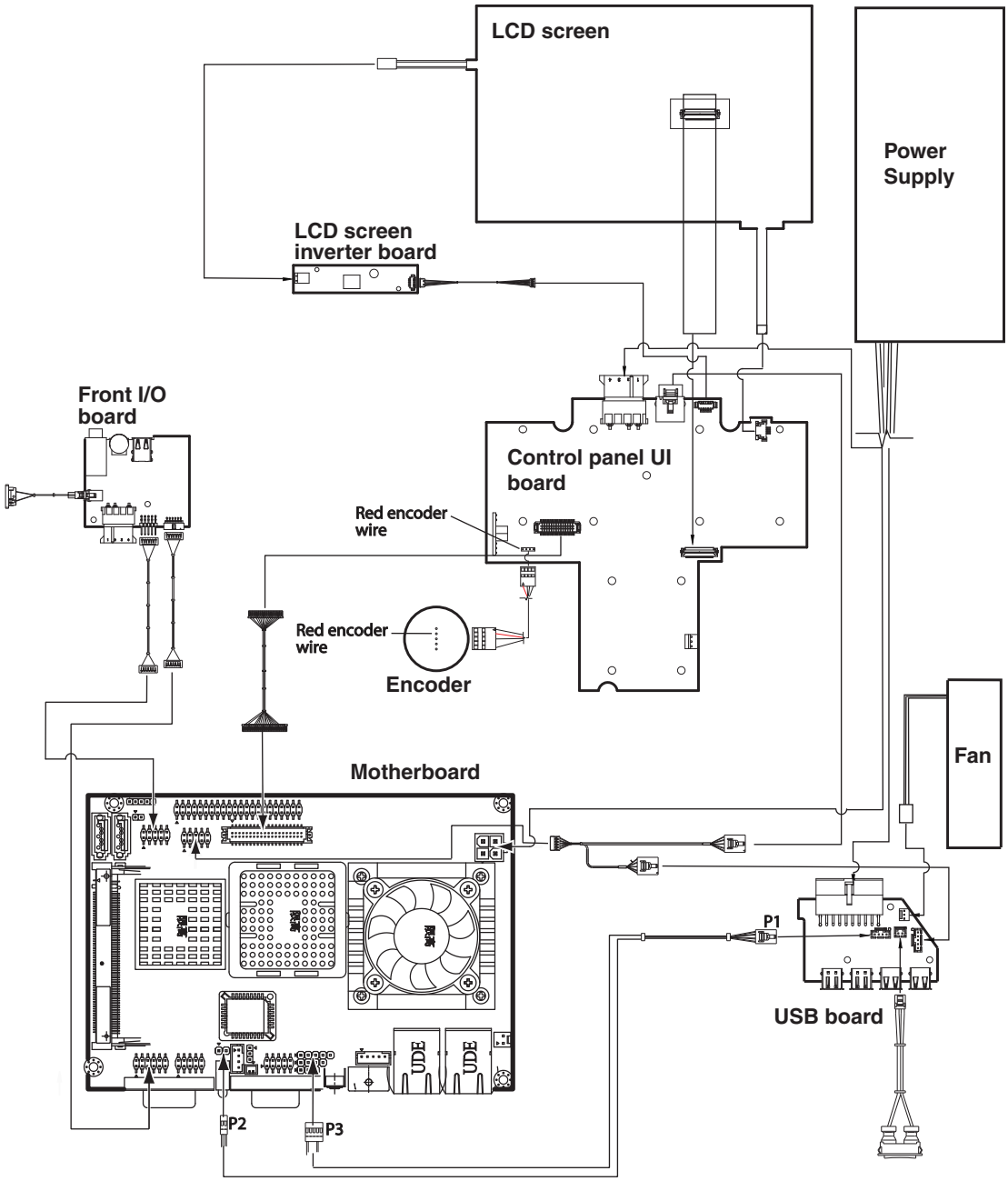

USB board removal

To remove the USB board, first remove the top, fan, and motherboard, then proceed as illustrated.

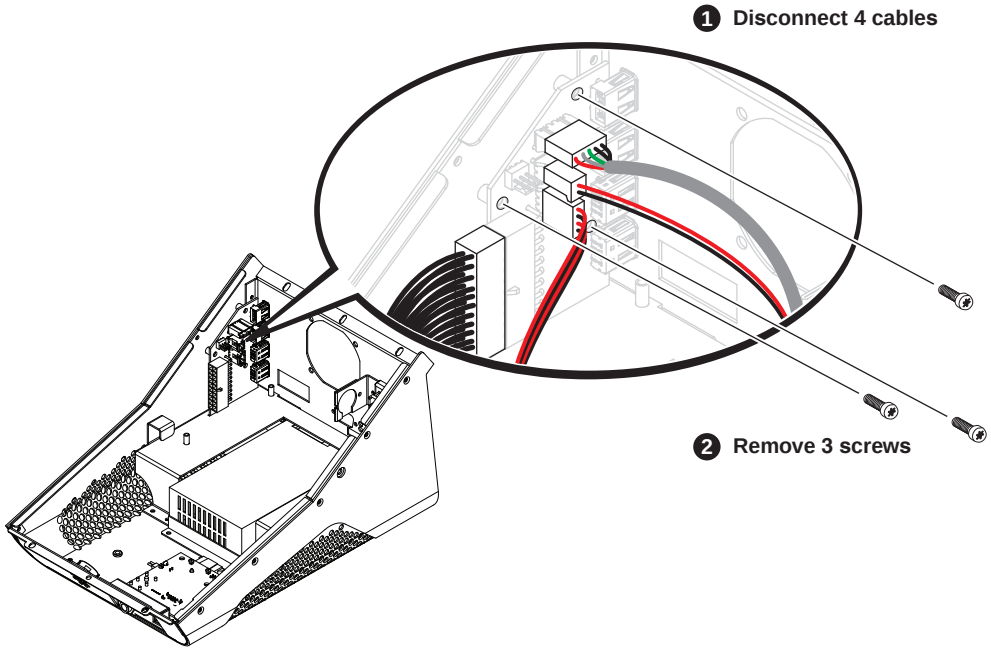

Power supply removal

To remove the power supply, first remove the top, front I/O board, fan, motherboard, and USB board, then proceed as illustrated.

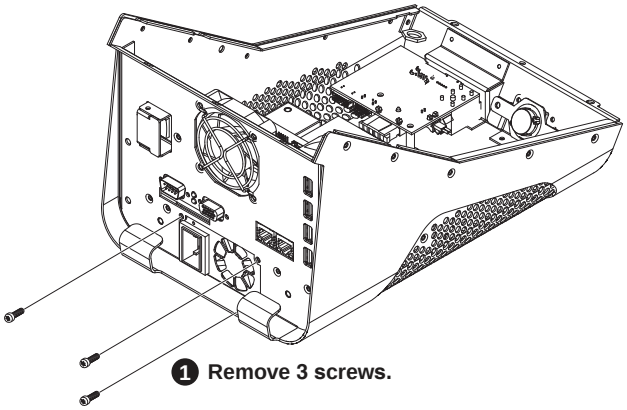

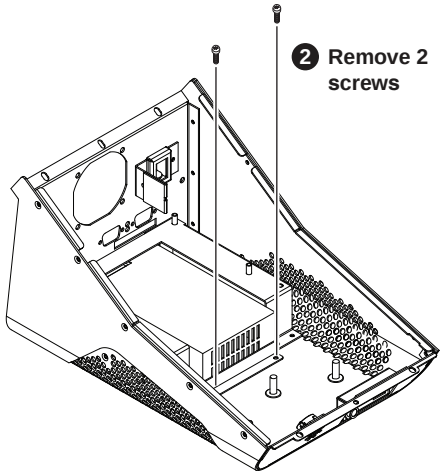

Appendix **A**

Trademarks and Agreements

Trademarks

Grass Valley, STRATUS, K2, Aurora, Summit, ChannelFlex, Dyno, Solo, ClipStore, Infinity, Turbo, Profile, Profile XP, NetCentral, NewsBrowse, NewsEdit, NewsQ, NewsShare, NewsQ Pro, and Media Manager are either registered trademarks or trademarks of Grass Valley USA, LLC. in the United States and/or other countries. Grass Valley USA, LLC. products are covered by U.S. and foreign patents, issued and pending. Additional information regarding Grass Valley USA, LLC. trademarks and other proprietary rights may be found at www.grassvalley.com. Other trademarks and logos used in this document are either registered trademarks or trademarks of the manufacturers or vendors of the associated products, such as Microsoft® Windows® operating system, Windows Media® player, Internet Explorer® internet browser, and SQL Server™. QuickTime and the QuickTime logo are trademarks or registered trademarks of Apple Computer, Inc., used under license therefrom.

Index

B

beep codes 35
BIOS
    beeps 35
    startup 52
boot media
    description 30

C

Compact Flash boot media
    description 30

D

documentation online 4
drive busy indicator
    description 34

E

environmental specification 35
external equipment
    troubleshooting 52

F

fan
    description 32
fan module
    troubleshooting 57
FAQ database 4
Field Replaceable Units (FRUs) 59
Flash media
    description 30
frequently asked questions 4
front connector board
    description 32

G

Grass Valley web site 4

I

indicators
    descriptions 34

K

K2 Media Client, overview descriptions 28
keyboard problems 52

L

LEDs
    descriptions 34
    NIC 34

M

motherboard
    startup 52
mouse problems 52

N

NIC indicator codes 34

O

online documentation 4
overview descriptions 28

P

power supply
    description 33
    troubleshooting 57

R

replacing a K2 Media Client 44
restart problems 51
RJ-45 LAN connector
    LEDs 34

S

shutdown problems 51
software download from web 4
specification
    general 35
standby switch 34
startup sequence
    troubleshooting 48
system drive
    description 30

T

temperature, troubleshooting 57
top cover removal 66, 69
Torx tool 59
troubleshooting
    external equipment 52
    preliminary steps 47

V

VGA display problems 52, 57

W

web site documentation 4
web site FAQ database 4
web site Grass Valley 4
web site software download 4
web site, for Grass Valley 26
Windows
    startup 56
    startup troubleshooting 56